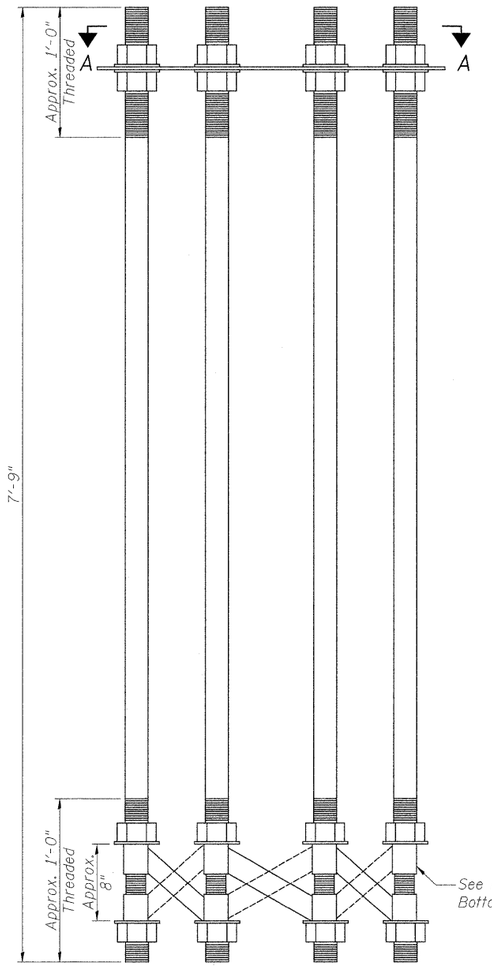

ANCHOR BOLT CAGE

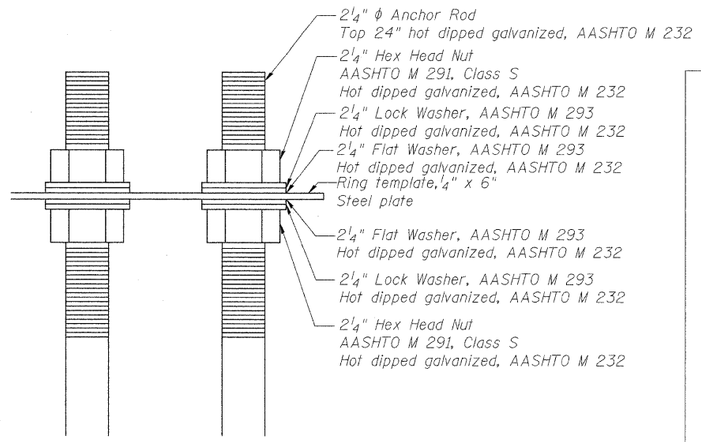

BOLT CAGE TOP

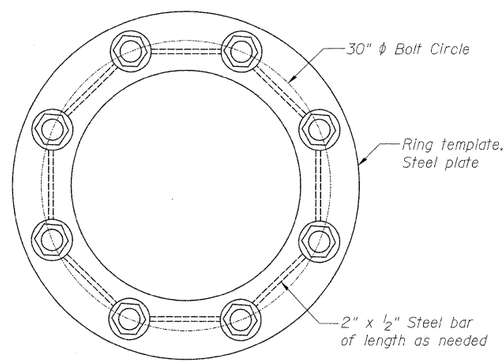

SECTION A-A

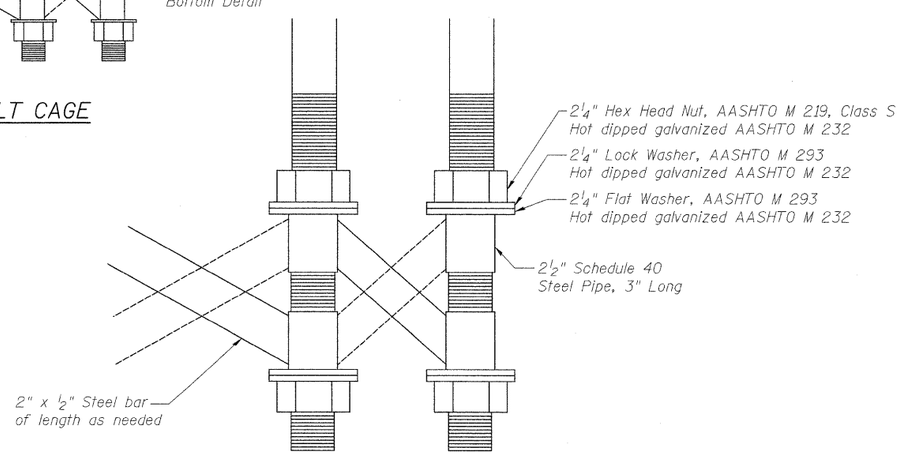

BOLT CAGE BOTTOM

FOR INFORMATION ONLY

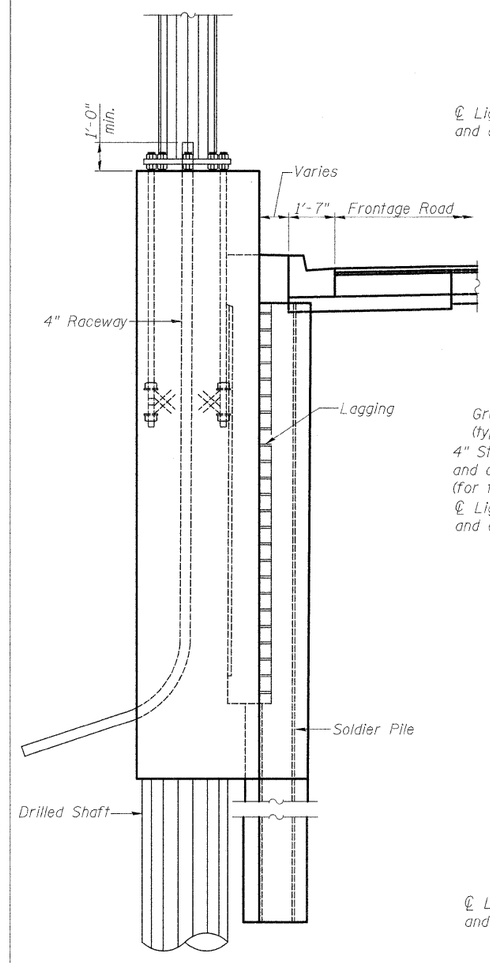

SECTION B-B

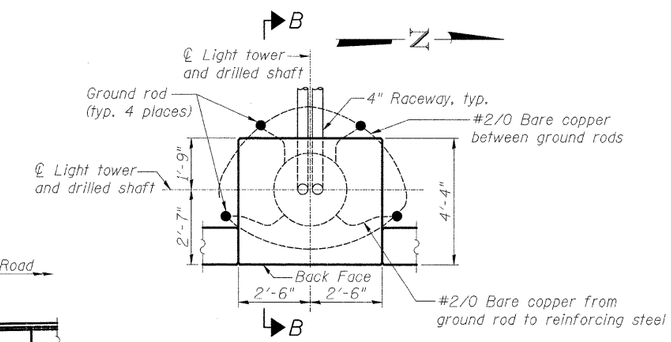

PLAN - 6POP2 CONDUIT PLACEMENT

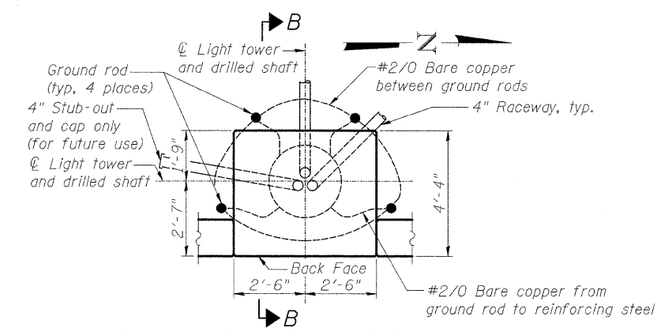

PLAN - 6POP4 CONDUIT PLACEMENT

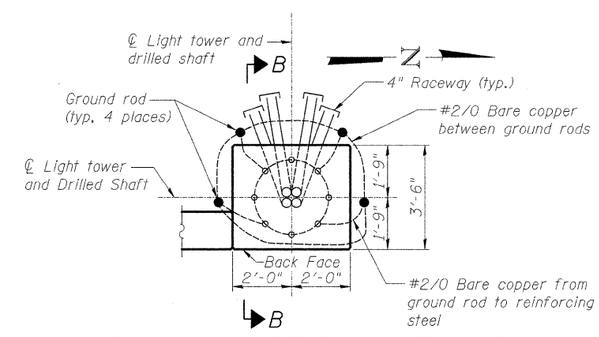

PLAN - 5RMN5 CONDUIT PLACEMENT

LIN ENGINEERING, LTD. Consulting Engineers Chatham, Illinois	USER NAME =	DESIGNED - MTH	REVISED -	STATE OF ILLINOIS DEPARTMENT OF TRANSPORTATION	ANCHOR ROD DETAILS 6POP2, 6POP4, & 5RMN5	F.A.I. RTE.	SECTION	COUNTY	TOTAL SHEETS	SHEET NO.
	FILE NAME =	CHECKED - ADB	REVISED -			90/94	2011-021-L	COOK	19	7
	PLOT SCALE =	DRAWN - AJF	REVISED -					CONTRACT NO. 60P16		
	PLOT DATE =	CHECKED - MTH	REVISED -				ILLINOIS	FED. AID PROJECT		