CONTRACT NO. 72667

F.A.P. RTE.	SECTION	COUNTY	TOTAL SHEETS	SHEET NO.
310	69-3(3HB)	MORGAN	793	345
STA.		TO STA.		
FED. ROAD DIST. NO.	ILLINOIS	FED. AID PROJECT		

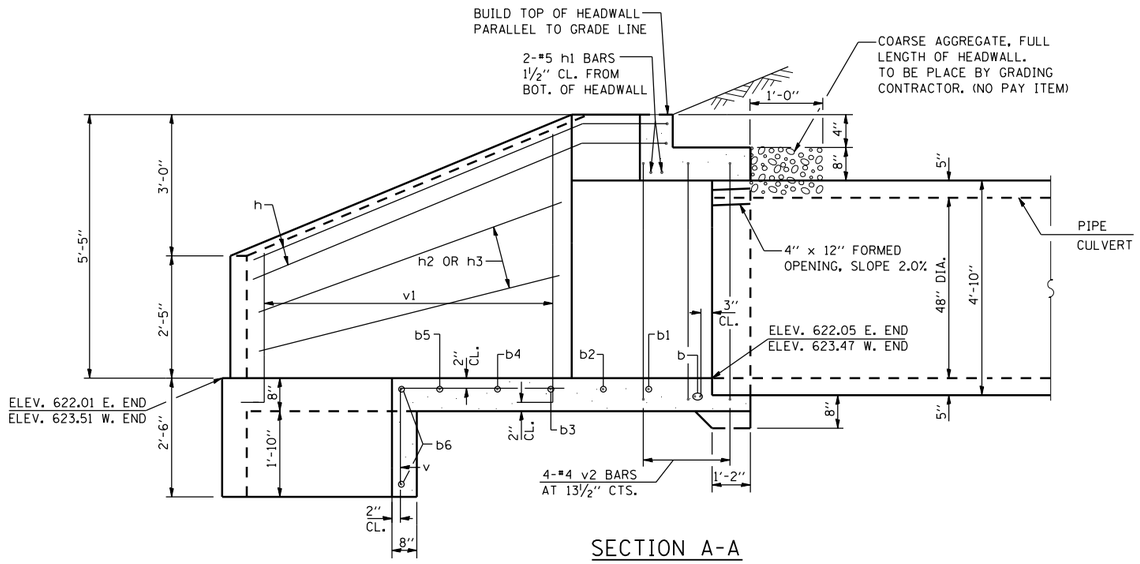

SECTION A-A

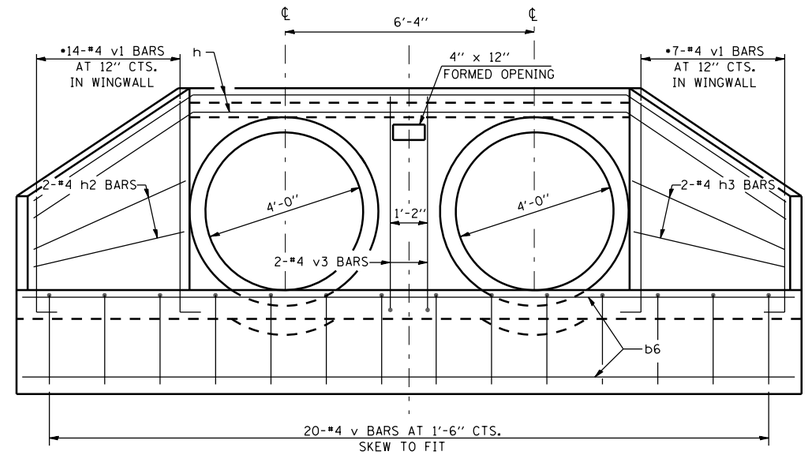

END ELEVATION

• SEE FIELD CUTTING DIAGRAM

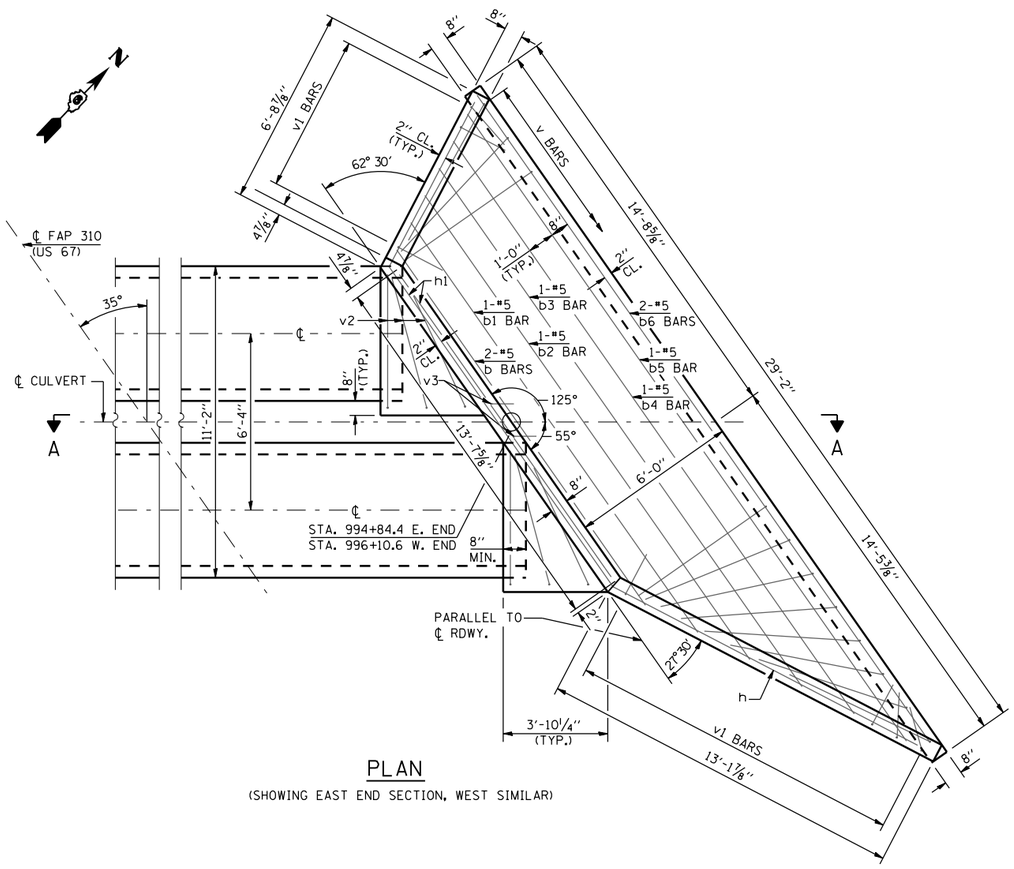

PLAN

(SHOWING EAST END SECTION, WEST SIMILAR)

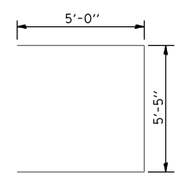

BAR v2

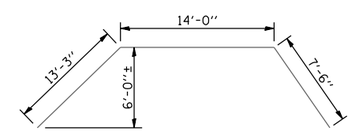

BAR h

(BEND IN FIELD)

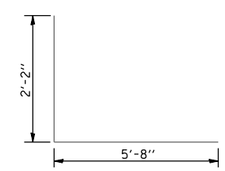

BAR v

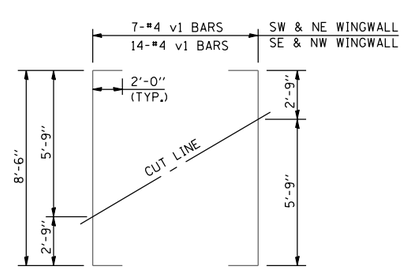

FIELD CUTTING DIAGRAM

ORDER v1 BARS FULL LENGTH

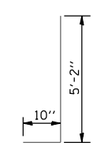

BAR v3

•• BILL OF MATERIAL

(2 END SECTIONS)

BAR	NO.	SIZE	LENGTH	SHAPE
b	4	#5	15'-8"	
b1	2	#5	18'-1"	
b2	2	#5	20'-6"	
b3	2	#5	23'-0"	
b4	2	#5	25'-5"	
b5	2	#5	27'-10"	
b6	4	#5	28'-10"	
h	4	#5	34'-9"	
h1	4	#5	13'-7"	
h2	4	#4	12'-10"	
h3	4	#4	6'-11"	
v	40	#4	7'-10"	
v1	21	#4	12'-6"	
v2	16	#4	15'-5"	
v3	4	#4	6'-0"	

•• FOR INFORMATION ONLY

REVISIONS NAME	DATE

ILLINOIS DEPARTMENT OF TRANSPORTATION

CULVERT END SECTIONS
STATION 995+49.00

FAP 310 (US 67/IL 104)

DATE 10/07

DRAWN BY ADB
CHECKED BY MTH

Mar-30-2011 09:40:22AM
9:40:22 AM
$FILE$