CONTRACT NO. 72667

F.A.P. RTE.	SECTION	COUNTY	TOTAL SHEETS	SHEET NO.
310	69-3(3HB)	MORGAN	793	434
STA.		TO STA.		
FED. ROAD DIST. NO.	ILLINOIS	FED. AID PROJECT		

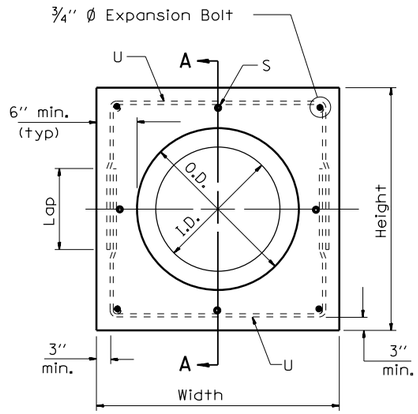

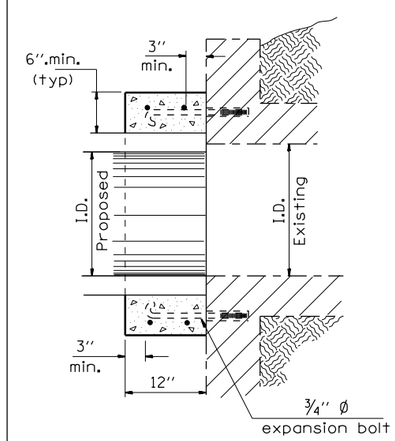

Section Type A
(Box end extension)

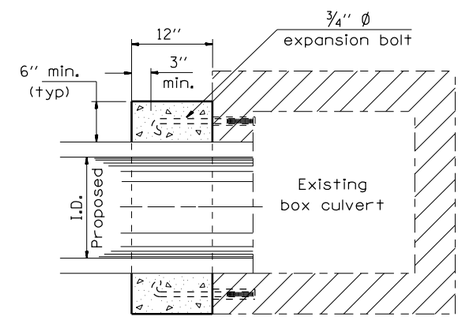

Section Type B
(Pipe in side extension)

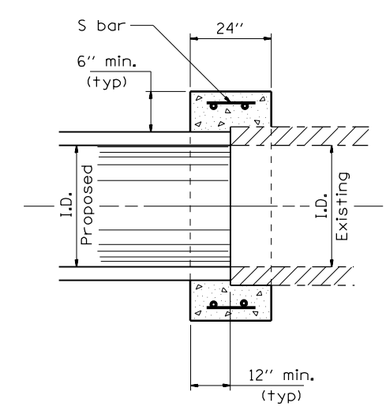

Section Type C
(Pipe end to pipe end extension
No expansion bolts required)

Section A - A

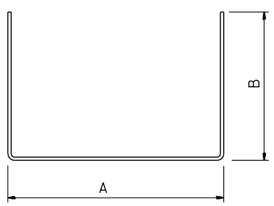

#5 U - bar

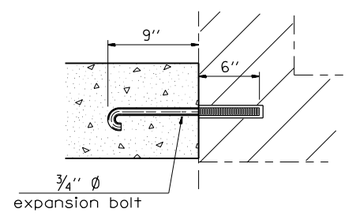

Expansion Bolt Detail

Notes:

1. Expansion bolts shall consist of self drilling expansion shields and ¾'' Ø hooked bolts. Hooked bolts shall extend a minimum of 9'' into new concrete. Minimum Certified Proof Load - 2 ton

2. Use minimum of 1 (one) expansion bolt at each corner.

Location	Station	Section Type	Skew	Existing Culvert	Proposed Culvert		Collar		Reinforcement Bars										Expansion Bolts ¾''	Concrete Collar
									S bar			U bar								
				Size	I.D.	O.D.	Height	Width	No.	Size	Length	No.	Size	A	B	Lap	Length	(lb)	Each	cu yd
US 67	1082+59.8 (LT)	C	27°	48''	48''	58''	70''	70''	8	#5	18''	4	#5	64''	41''	18	146''	63.3	0	1.16
US 67	1102+68.7 (LT)	C	35°	27''	27''	33½''	45½''	45½''	8	#5	18''	4	#5	39½''	28¾''	18	97''	46.3	0	0.61
US 67	1102+68.7 (RT)	C	35°	27''	27''	33½''	45½''	45½''	8	#5	18''	4	#5	39½''	28¾''	18	97''	46.3	0	0.61
TRANSITION A	971+13.4 (RT)	A	7°	2' x 2'	24''	24''	42''	42''	-	-	-	4	#5	36''	27''	18	90''	31.3	4	0.34
TRANSITION A	974+66.0 (RT)	A	7°	2' x 2'	24''	24''	42''	42''	-	-	-	4	#5	36''	27''	18	90''	31.3	4	0.34

REVISIONS	
NAME	DATE

ILLINOIS DEPARTMENT OF TRANSPORTATION

MISCELLANEOUS DETAILS
CONCRETE COLLAR
FAP 310 (US 67/IL 104)

DRAWN BY BGJ
DATE 9/06 CHECKED BY EBB

Mar-30-2011 09:45:31AM 9:45:31 AM
$FILE$