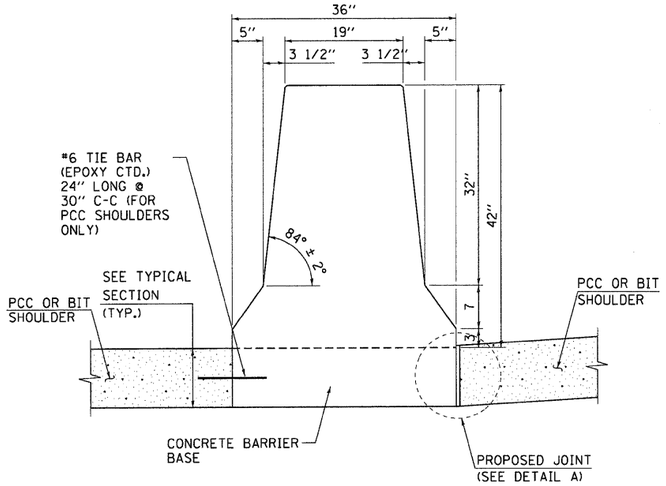

TYPICAL CROSS SECTION

CONCRETE BARRIER, DOUBLE FACE,
42 HEIGHT

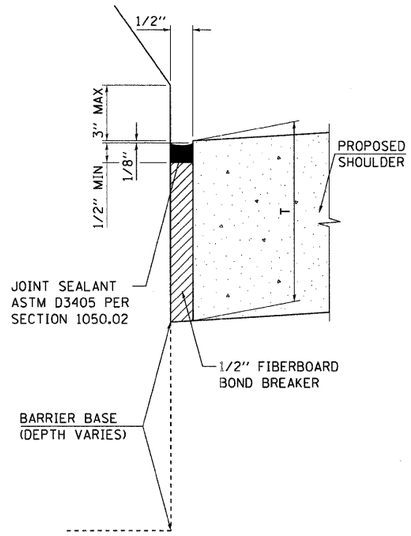

DETAIL A

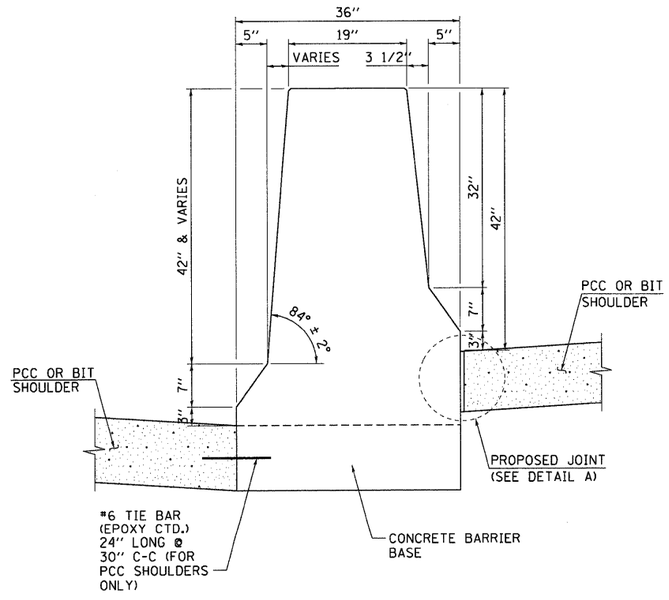

VARIABLE CROSS SECTION

CONCRETE BARRIER, DOUBLE FACE,
42 HEIGHT

FOR INFORMATION ONLY

LEGEND:

PAY LIMITS OF BITUMINOUS OR PCC SHOULDERS.

NOTES:

1. FOR ADDITIONAL CONCRETE BARRIER DETAILS SEE STANDARDS 637001 & 637006.
2. FOR ADDITIONAL SHOULDER DETAILS SEE TYPICAL SECTIONS, PIPE UNDERDRAIN & SUBGRADE DETAILS FOR OPEN AND CLOSED DRAINAGE SYSTEMS, P.C.C SHOULDER DETAILS AND/OR STANDARDS 601001, 482006, 483001 & 482001 AS APPLICABLE.
3. A 1" RADIUS CAN BE SUBSTITUTED FOR THE 1/2" CHAMFER AT THE TOP OF THE BARRIER WALL.
4. FOR PCC SHOULDERS -- DEPTH "T" SHALL BE 10.5" MINIMUM OR THE SHOULDER DEPTH IF GREATER.
5. THE THICKENED PCC SHOULDER FOR THE REINFORCED CONCRETE BARRIER SECTION SHALL BE INCLUDED IN THE COST OF THE CONCRETE BARRIER OF THE TYPE INVOLVED.
6. ALL REINFORCING BARS, BAR SPLICERS, TIE BARS AND DOWEL BARS SHALL BE SEATED IN THE FINAL POSITION PRIOR TO THE CONCRETE OPERATIONS. BARS CANNOT BE MUCKED INTO PLACE.
7. THE FURNISHING AND PLACING OF TIE BARS AND DOWEL BARS SHALL BE INCLUDED IN THE COST OF PCC SHOULDER OF THE THICKNESS SPECIFIED.
8. THE FURNISHING AND PLACING OF BAR SPLICERS, TIE BARS AND DOWEL BARS SHALL BE INCLUDED IN THE COST OF THE PCC SHOULDER OF THE THICKNESS SPECIFIED.
9. THE CONDUIT LOCATIONS SHOWN ARE TYPICAL. ADDITIONAL CONDUITS MAY BE REQUIRED. FOR THE SIZE, LOCATION, AND DETAILS, SEE THE ELECTRICAL AND/OR SURVEILLANCE PLANS. THE FURNISHING AND PLACING OF CONDUITS OF THE SIZE SPECIFIED SHALL BE PAID FOR SEPARATELY.