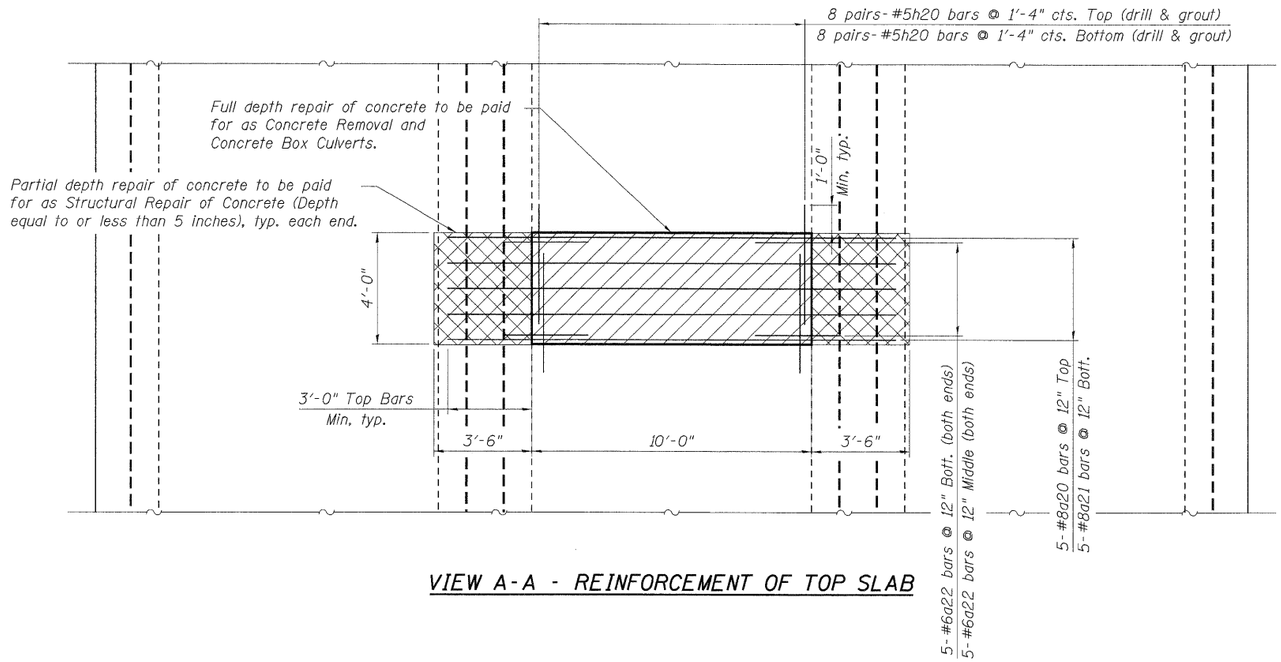

VIEW A-A - REINFORCEMENT OF TOP SLAB

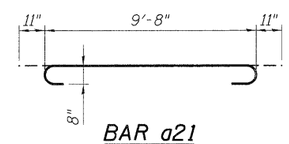

BAR a21

BAR LIST

Bar	No.	Size	Length	Shape
a20	10	#8	16'-0"	
a21	10	#8	11'-6"	
a22	40	#6	3'-0"	
h20	64	#5	3'-10"	

BILL OF MATERIAL

Item	Unit	Total
Concrete Removal	Cu. Yd.	4.7
Reinforcement Bars	Pound	1,170
Concrete Box Culverts	Cu. Yd.	4.7
Structural Repair of Concrete (Depth equal to or less than 5")	Sq. Ft.	56

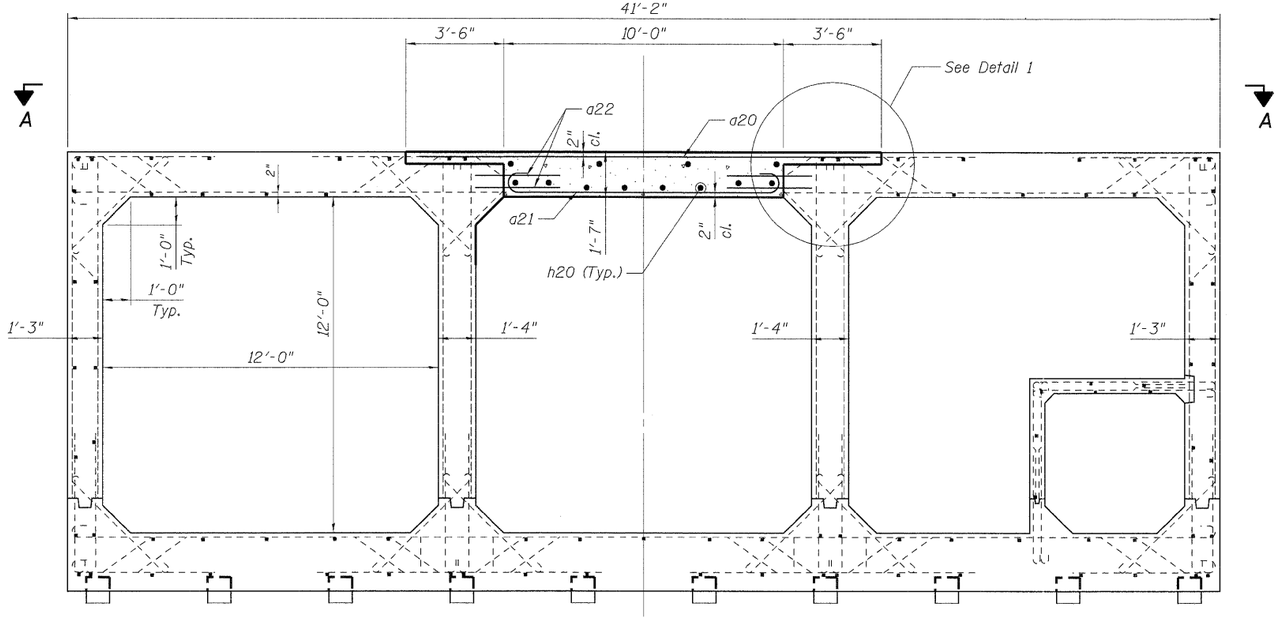

CROSS SECTION OF BOX CULVERT

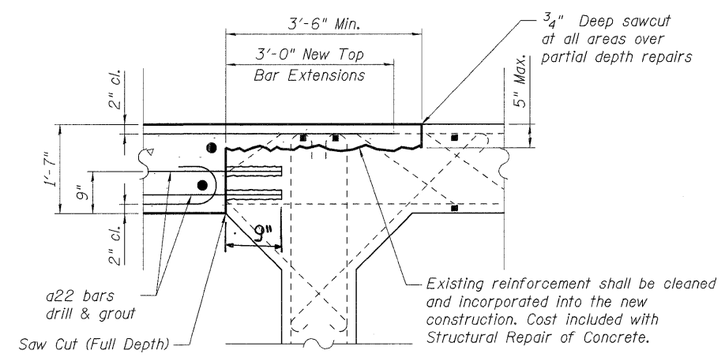

DETAIL 1

NOTES:

1. Reinforcement bars shall conform to the requirements of ASTM A 706 Gr 60. See Special Provisions.
2. Drill and epoxy grout bars in drilled holes according to Section 584 of the IDOT Standard Specifications. Method and grout are subject to the approval of the Engineer. The cost of drilling and grouting shall be included with Reinforcement Bars.
3. Prior to placing new concrete, full depth saw cuts shall be cleaned and prepared according to the Surface Preparation section of the Guide Bridge Special Provision for Structural Repair of Concrete.