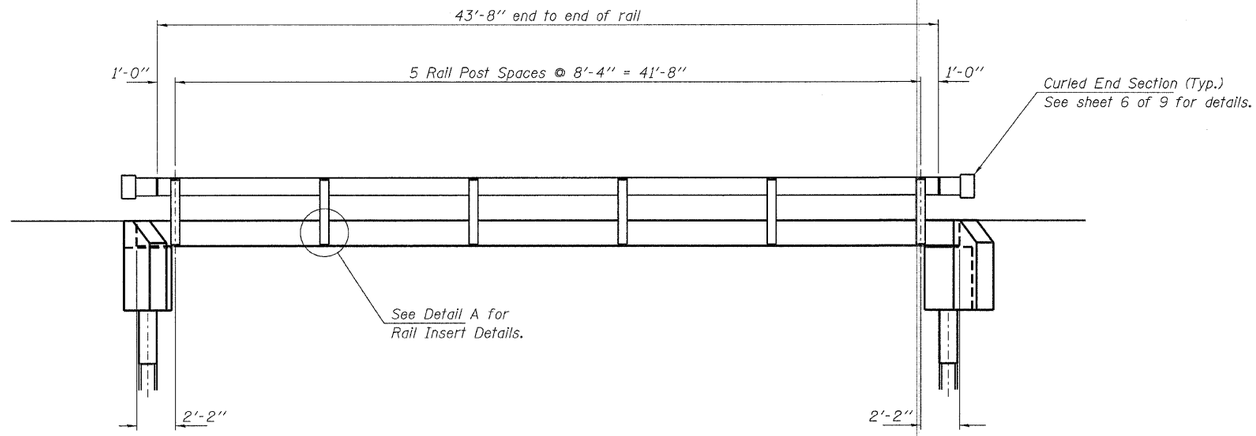

ELEVATION

Showing Rail Post Spaces

See sheet 6 of 9 for Railing Details.

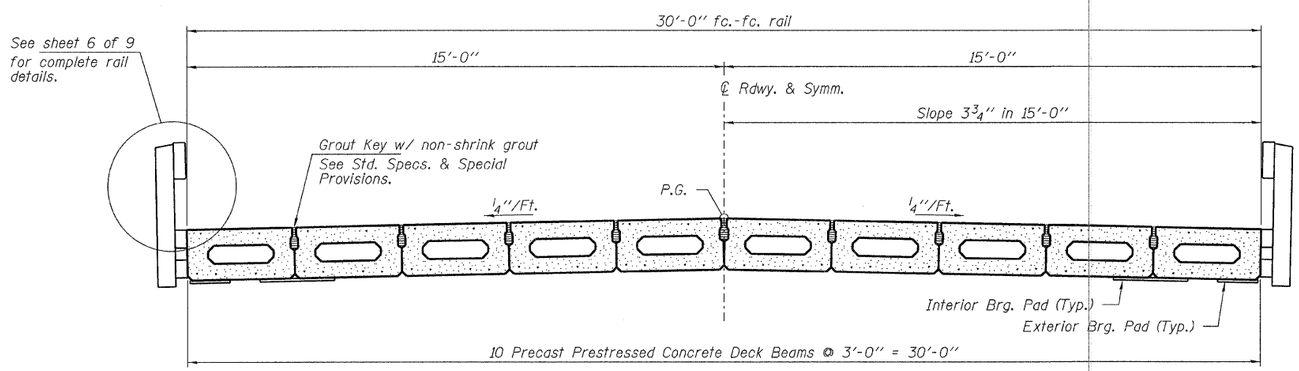

CROSS SECTION

See sheets 3 & 4 of 9 for Superstructure.

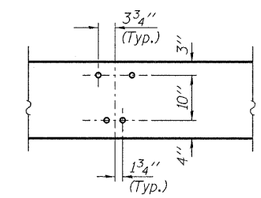

DETAIL A

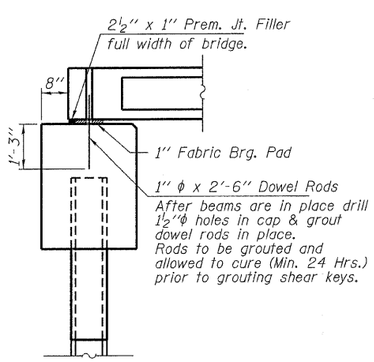

SECTION AT ABUTMENTS

@ Rt. L's

FILE NAME = 100323-sht-bridge.dgn	USER NAME =	DESIGNED - A.S.L.	REVISED -	STATE OF ILLINOIS VERMILION COUNTY HIGHWAY DEPARTMENT	SUPERSTRUCTURE DETAILS STRUCTURE NO. 092-3517	T.R.	SECTION	COUNTY	TOTAL SHEETS	SHEET NO.
HAMPTON, LENZINI AND RENWICK, INC. 3085 STEVENSON DRIVE, SUITE 201 SPRINGFIELD, ILLINOIS 62703		CHECKED - S.W.M.	REVISED -			78	09-14138-00-BR	VERMILION	27	23
ILLINOIS PROFESSIONAL DESIGN FIRM LS / PE / SE CORP. 184.000869	PLOT SCALE =	DRAWN - D.A.B.	REVISED -			OAKWOOD ROAD DISTRICT		CONTRACT NO. 91458		
	PLOT DATE = 3/2/2011	CHECKED - S.W.M.	REVISED -		SHEET NO. 5 OF 9 SHEETS			ILLINOIS FED. AID PROJECT		