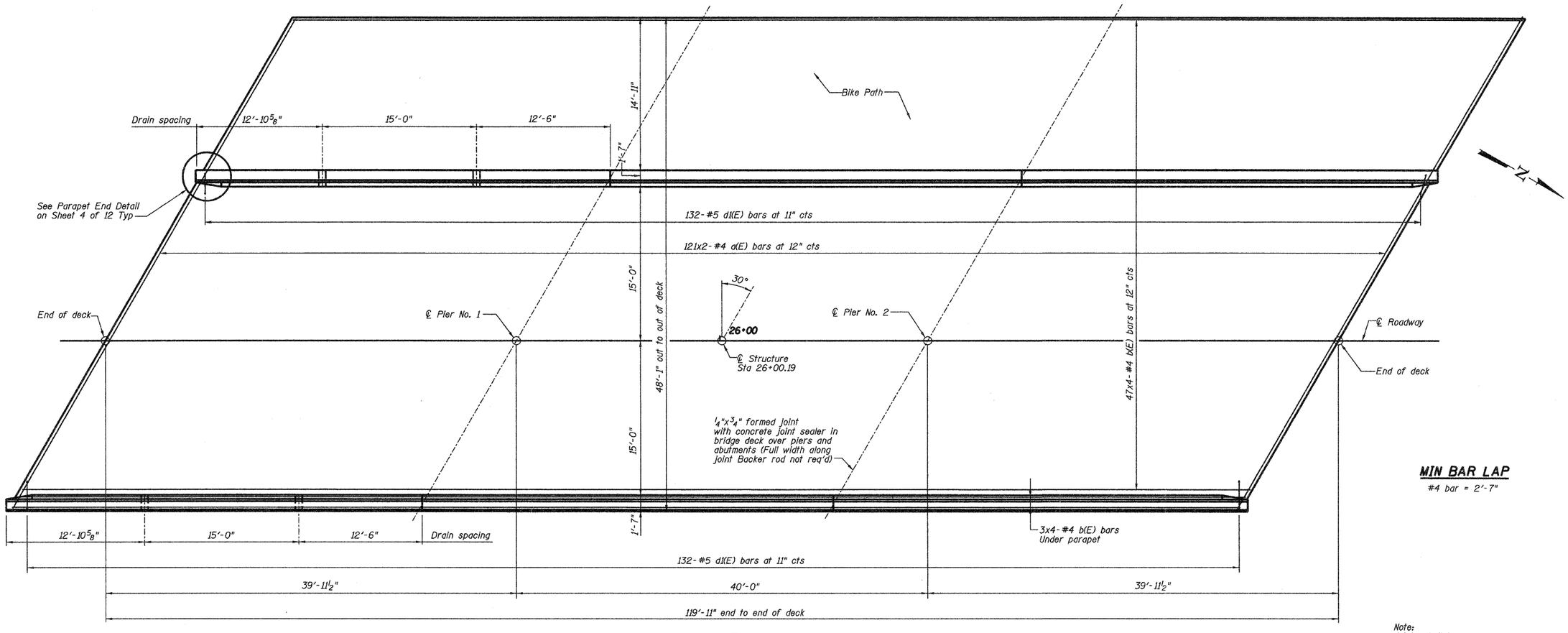

PLAN

MIN BAR LAP

#4 bar = 2'-7"

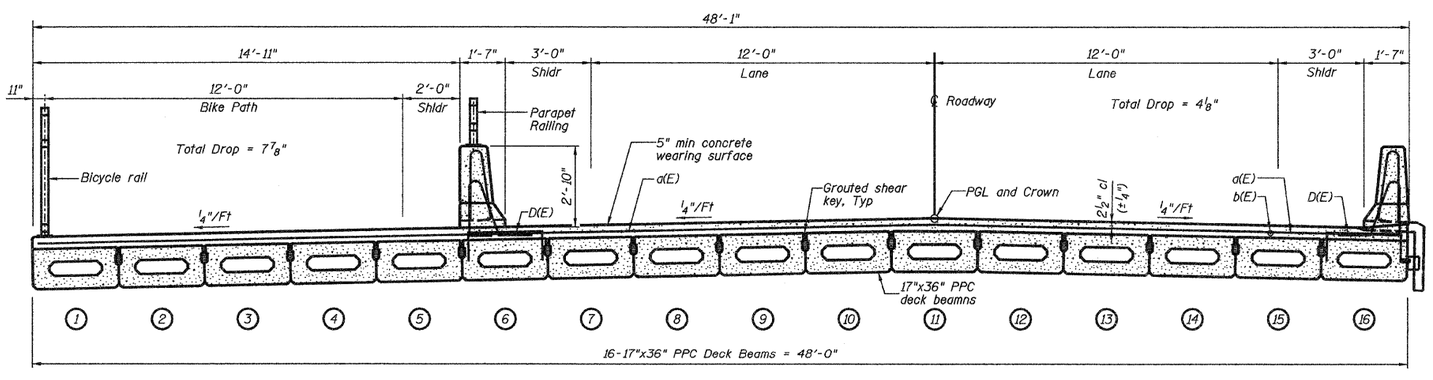

SECTION THRU BRIDGE DECK

Note:
Joints shall be included in cost for Concrete Wearing Surface.

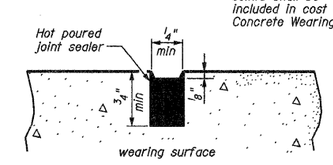

FORMED JOINT DETAIL

NOTES

See Sheet No 3 & 4 of 12 for superstructure details and Bill of Material.

Reinforcement bars designated (E) shall be epoxy coated.

Bars indicated thus 4x3-#4 etc indicates 4 lines of bars with 3 lengths per line.

5" concrete wearing surface shall be paid for as "Concrete Wearing Surface."

Parapets shall be paid for as "Concrete Superstructure."

Space reinforcement to avoid drill and grouted anchor bolts for Bicycle Railing. See Sheet 7 of 12 for anchor location and details.

FILE NAME = $FILEL$	USER NAME = $USER$	DESIGNED ACB	REVISED -
		DRAWN RLK	REVISED -
	PLOT SCALE = $SCALE$	CHECKED JMB	REVISED -
	PLOT DATE = $DATE$	DATE 1-11-11	REVISED -

HOMER L. CHASTAIN & ASSOCIATES, LLP
CONSULTING ENGINEERS
DECATUR (217) 422-8544
CHICAGO (773) 714-0050
ROCKFORD (815) 489-0050
184-001397

DECK PLAN AND CROSS SECTION
BALTIMORE AVE (CH 7) OVER FINLEY CREEK

SCALE: | SHEET NO. 2 OF 12 SHEETS | STA. | TO STA.

F.A.S. RTE.	SECTION	COUNTY	TOTAL SHEETS	SHEET NO.
CH 7	05-00198-BR	MACON	29	8
		CONTRACT NO.		
		ILLINOIS FED. AID PROJECT		

...\revised\supdetails.dgn 4/19/2011 7:46:19 AM