06/17/2022 LETTING ITEM 224

ROUTE NO.	SECTION	COUNTY	TOTAL SHEETS	SHEET NO.
T.R. 196A	19-07116 -00-BR	CHRISTIAN	33	1
FED. ROAD DIST. NO.		ILLINOIS	CONTRACT NO. 93789	

STATE OF ILLINOIS
DEPARTMENT OF TRANSPORTATION

PLANS FOR PROPOSED
SURFACE TRANSPORATION PROGRAM
OFF SYSTEM BRIDGE

PROJECT 9EXR(862)
SECTION 19–07116–00–BR
LOCUST ROAD DISTRICT
CHRISTIAN COUNTY
T.R. 196A /1600E ROAD
PROPOSED STRUCTURE NO. 011–3424
C–96–061–21

INDEX OF SHEETS

SHEET NO.	DESCRIPTION
1.	COVER SHEET
2.	SUMMARY OF QUANTITIES AND GENERAL NOTES
3.	TYPICAL CROSS SECTIONS
4-5.	PLAN AND PROFILE
6.	INTERSECTION DETAIL
7-19.	BRIDGE PLANS
20-33.	STATION CROSS SECTIONS

HIGHWAY STANDARDS:

515001-04	NAME PLATE FOR BRIDGES
701901-08	TRAFFIC CONTROL DEVICES
725001-01	OBJECT AND TERMINAL MARKERS
BLR 21-9	TYPICAL APPLICATION OF TRAFFIC CONTROL DEVICES FOR CONSTRUCTION ON RURAL LOCAL HIGHWAYS

UTILITIES

SHELBY ELECTRIC CO-OP
IL RTE & N. 6TH
P.O. BOX 166
SHELBYVILLE, IL 62565

CONSOLIDATED COMMUNICATIONS
P.O. BOX 220
TAYLORVILLE, IL 62568

EJ WATER CO-OP
P.O. BOX 8
DIETERICH, IL 62424

NEW WAVE COMMUNICATIONS / SPARK LIGHT
1209 N. STATE ST.
WESTVILLE, IL 61883

IMPROVEMENT ENDS
STATION 14+46

STA. 10+08
PRECAST PRESTRESSED CONCRETE DECK BEAM BRIDGE.
3 SPANS: 35'-0", 50'-0", 35'-0"
27'-0" RDWY.; SKEW = 0°
EXISTING STRUCTURE NO. 011-3153
PROPOSED STRUCTURE NO. 011-3424

IMPROVEMENT BEGINS
STATION 6+50

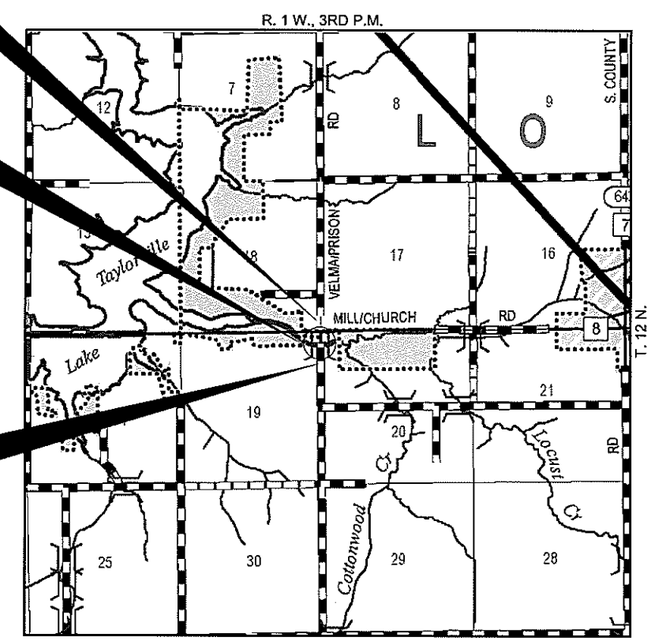

LOCATION MAP

APPROXIMATE SCALE: 0 ½ MILE

NET LENGTH OF SECTION = 796 FEET = 0.151 MILES

N

LOCATION OF SECTION INDICATED THUS:–

ILLINOIS DEPARTMENT OF TRANSPORTATION	
APPROVED	3/18/22
	COUNTY ENGINEER
APPROVED	3-18-22
	TOWNSHIP COMMISSIONER
PASSED	3/31/2022
	DISTRICT SIX ENGINEER OF LOCAL ROADS & STREETS
Releasing For Bid Based on Limited Review	3/31/2022
	REGION FOUR ENGINEER
	STATE OF ILLINOIS DEPARTMENT OF TRANSPORTATION

WARNING

CALL U.L.I.E. TOLL FREE 1-800-892-0123

CALL 811 BEFORE YOU DIG

DIG NO: X2091254

FULL SIZE PLANS HAVE BEEN PREPARED USING STANDARD ENGINEERING SCALES. REDUCED SIZED PLANS WILL NOT CONFORM TO STANDARD SCALES. IN MAKING MEASUREMENTS ON REDUCED PLANS, THE ABOVE SCALES MAY BE USED.

FUNCTIONAL CLASSIFICATION: LOCAL ROAD (0–250 ADT)
DESIGN SPEED: 40 MPH
DESIGN TRAFFIC: 250 ADT

DATE: 03/18/2022
STEVEN W. WEGGENSTAFF 062-50051 LICENSED PROFESSIONAL ENGINEER STATE OF ILLINOIS
EXPIRES: 11/30/2023

HAMPTON, LENZINI AND RENWICK, INC.
CIVIL ENGINEERS · STRUCTURAL ENGINEERS · LAND SURVEYORS
3085 STEVENSON DRIVE, SUITE 201
SPRINGFIELD, ILLINOIS 62703
217.546.3400 www.hlrengineering.com
184.000959
ILLINOIS PROFESSIONAL DESIGN FIRM LS / PE / SE CORPORATION

PROJECT NUMBER: 19.0657.130 DATE: 03/18/2022

CONTRACT NO. 93789 PRINTED BY AUTHORITY OF THE STATE OF ILLINOIS

SUMMARY OF QUANTITIES

	CODE NO.	ITEM	CONSTRUCTION TYPE CODE 0010 UNIT	TOTAL QUANTITY
	20100110	TREE REMOVAL (6 TO 15 UNITS DIAMETER)	UNIT	5
^	20200100	EARTH EXCAVATION	CU YD	165
	20300100	CHANNEL EXCAVATION	CU YD	205
	20400800	FURNISHED EXCAVATION	CU YD	2,960
	20700110	POROUS GRANULAR EMBANKMENT	TON	70
	28000400	PERIMETER EROSION BARRIER	FOOT	1,000
	28100207	STONE RIPRAP, CLASS A4	TON	700
	28200200	FILTER FABRIC	SQ YD	760
^	35101400	AGGREGATE BASE COURSE, TYPE B	TON	690
^	50100100	REMOVAL OF EXISTING STRUCTURES	EACH	1
^	50201101	COFFERDAM (TYPE 1) (LOCATION - 1)	EACH	1
^	50201102	COFFERDAM (TYPE 1) (LOCATION - 2)	EACH	1
	50300225	CONCRETE STRUCTURES	CU YD	45
	50300280	CONCRETE ENCASEMENT	CU YD	18
	50400405	PRECAST PRESTRESSED CONCRETE DECK BEAMS (21" DEPTH)	SQ FT	3,240
	50800205	REINFORCEMENT BARS, EPOXY COATED	POUND	5,270
+	50900205	STEEL RAILING, TYPE S1	FOOT	236
	51201400	FURNISHING STEEL PILES HP10X42	FOOT	1,050
	51202305	DRIVING PILES	FOOT	1,050
	51203400	TEST PILE STEEL HP10X42	EACH	2
	51500100	NAME PLATES	EACH	1
	60146304	PIPE UNDERDRAINS FOR STRUCTURES 4"	FOOT	120
	67100100	MOBILIZATION	L SUM	1
+^	72501000	TERMINAL MARKER - DIRECT APPLIED	EACH	4
^	LR403200	BITUMINOUS MATERIALS (PRIME COAT)	TON	3
^	LR403400	BITUMINOUS MATERIALS (COVER AND SEAL COATS)	TON	7
^	LR403500	COVER COAT AGGREGATE	TON	45
	LR403600	SEAL COAT AGGREGATE	TON	22
^	X2501000	SEEDING, CLASS 2 (SPECIAL)	ACRE	1.5
^	XX009290	TRAFFIC CONTROL AND PROTECTION, STANDARD BLR 21	EACH	1

^ SEE SPECIAL PROVISIONS

+ SPECIALTY ITEM

GENERAL NOTES

1) ALL CONSTRUCTION SHALL BE DONE IN ACCORDANCE WITH THE STATE OF ILLINOIS "STANDARD SPECIFICATIONS FOR ROAD AND BRIDGE CONSTRUCTION, ADOPTED JANUARY 1, 2022", (HERE IN AFTER REFERRED TO AS THE STANDARD SPECIFICATIONS; THE ; THE LATEST EDITION OF THE "ILLINOIS MANUAL ON UNIFORM TRAFFIC CONTROL DEVICES FOR STREETS AND HIGHWAYS"; THE DETAILS IN THE PLANS AND THE "SPECIAL PROVISIONS" INCLUDED IN THE DOCUMENTS.

2) ALL CLEARING, GRUBBING, FENCE REMOVAL, PAVEMENT REMOVAL, AND REMOVAL OF EXISTING DRAINAGE STRUCTURES SHALL BE INCLUDED IN THE COST OF EARTH EXCAVATION. ALL AGGREGATE AND BITUMINOUS PAVEMENT SHALL BE REMOVED AND PROPERLY DISPOSED OF BY THE CONTRACTOR IN A METHOD APPROVED BY THE ENGINEER. REMOVAL AND DISPOSAL OF PAVEMENT SHALL BE INCLUDED IN THE COST OF EARTH EXCAVATION AND NO ADDITIONAL COMPENSATION WILL BE ALLOWED.

3) WHERE SECTION OR SUBSECTION MONUMENTS ARE ENCOUNTERED, THE ENGINEER SHALL BE NOTIFIED BEFORE SUCH MONUMENTS ARE REMOVED. THE CONTRACTOR SHALL PROTECT AND CAREFULLY PRESERVE ALL PROPERTY MARKS AND MONUMENTS UNTIL THE OWNER, AN AUTHORIZED SURVEYOR OR AGENT HAS WITNESSED OR OTHERWISE REFERENCED THEIR LOCATION.

4) ANY REFERENCE TO STANDARDS THROUGHOUT THE PLANS OR SPECIAL PROVISIONS SHALL BE INTERPRETED TO BE THE LATEST STANDARD OF THE DEPARTMENT.

5) THE LOCATION ON THE PLANS OF EXISTING DRAINAGE STRUCTURES, TELEPHONE LINES, ELECTRIC LINES, WATER SERVICE LINES, GAS MAINS, AND OTHER UTILITY FACILITIES AS SHOWN ON THE PLANS ARE BASED ON FIELD INVESTIGATIONS AND THE BEST INFORMATION AVAILABLE, BUT THE LOCATIONS ARE NOT GUARANTEED. IT SHALL BE THE CONTRACTOR'S RESPONSIBILITY TO ASCERTAIN THEIR EXACT LOCATION FROM THE INDIVIDUAL UTILITY COMPANIES AND BY FIELD INSPECTION.

6) THE FOLLOWING RATES OF APPLICATION HAVE BEEN USED IN CALCULATING PLAN QUANTITIES

AGGREGATE BASE COURSE	2.05	TON/CU YD
BITUMINOUS MATERIALS (PRIME COAT)	0.25	LB/SQ FT
BITUMINOUS MATERIALS (COVER AND SEAL COATS)	0.3	LB/SQ FT
COVER COAT AGGREGATE	25	LB/SQ FT
SEAL COAT AGGREGATE	25	LB/SQ FT
POROUS GRANULAR EMBANKMENT	1.50	TON/CU YD
STONE RIPRAP	1.75	TON/CU YD

7) THE FINAL SURFACE OF ALL EMBANKMENT AREAS SHALL BE SEEDED. THE TOP 4 INCHES OF THE SEEDED AREAS SHALL BE TOPSOIL SUBJECT TO THE APPROVAL OF THE ENGINEER. THE COST OF SHAPING THE SLOPES AND PROVIDING TOP SOIL WILL NOT BE PAID FOR SEPARATELY BUT SHALL BE INCLUDED IN THE COST OF EARTH EXCAVATION.

8) THE AREA TO BE SEEDED SHALL CONSIST OF ALL DISTURBED EARTH SURFACES WITHIN THE RIGHT OF WAY OR AS DIRECTED BY THE ENGINEER.

SEEDING, CLASS 2 (SPECIAL) = 1.5 ACRES

9) ALL WASTE MATERIAL FROM EXCAVATIONS SHALL BE DISPOSED OF BY THE CONTRACTOR. NO ADDITIONAL COMPENSATION WILL BE ALLOWED.

10) COMMITMENTS:

1) TREES SHALL NOT BE CLEARED BETWEEN APRIL 1 AND SEPTEMBER 30.

2) A BAT ASSESSMENT SHALL BE CONDUCTED IF WORK OCCURS TO EXISTING STRUCTURE AFTER OCTOBER 19, 2022.

PERIMETER EROSION BARRIER

STATION	FOOT
RT. STA. 7+50 TO 13+00	500
LT. STA. 7+50 TO 13+00	500
TOTAL	1,000

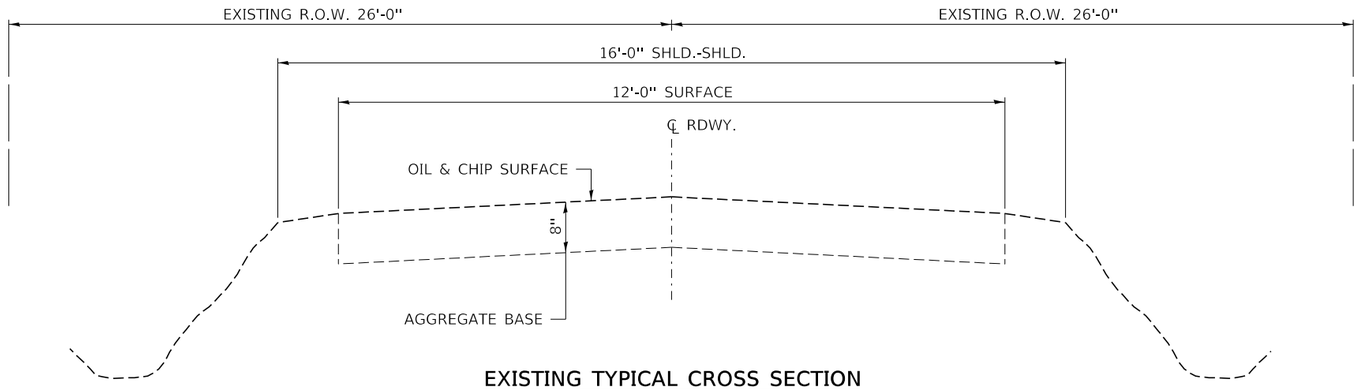

EXISTING TYPICAL CROSS SECTION

STA. 6+50 TO 14+46

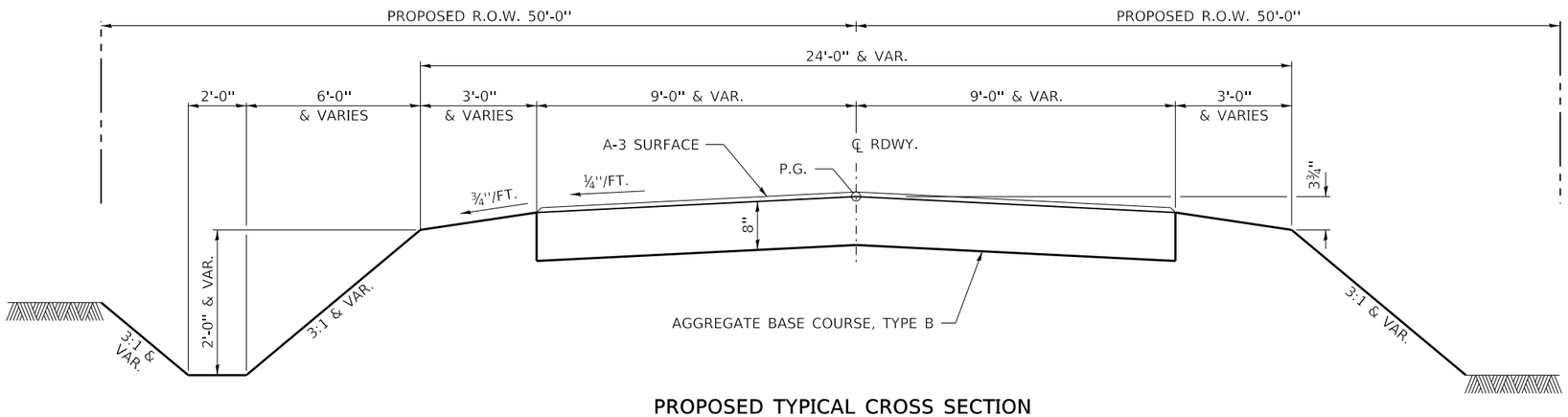

SUGGESTED CUT SECTION
CONSTRUCT AS SHOWN IN
STATION CROSS SECTIONS

PROPOSED TYPICAL CROSS SECTION

STA. 6+50 TO 14+46

SUGGESTED FILL SECTION
CONSTRUCT AS SHOWN IN
STATION CROSS SECTIONS

TRANSITIONS FROM THE PROPOSED ROADWAY TO THE EXISTING ROADWAY ARE TO BE CONSTRUCTED FROM STA. 6+50 TO 7+00 AND STA. 14+00 TO STA. 14+46.
SEE SHEET 7 FOR TRANSITION AT BRIDGE.

ROADWAY SCHEDULE

LOCATION	AGGREGATE BASE COURSE, TYPE B 8"	BITUMINOUS MATERIALS (PRIME COAT)	BITUMINOUS MATERIALS (COVER AND SEAL COATS)	COVER COAT AGGREGATE	SEAL COAT AGGREGATE
	35101400	LR43200	LR43400	LR43500	LR43600
T.R. 196A / 1600 E ROAD	TON	TON	TON	TON	TON
STA. 6+50.00 TO STA. 9+36.25	260	1.0	2.0	14.0	7.0
STA. 9+36.25 TO STA. 10+57.75	0	1.0	1.0	9.0	4.0
STA. 10+57.75 TO STA. 14+46.00	430	1.0	4.0	22.0	11.0
TOTAL	690	3.0	7.0	45	22

EARTHWORK SCHEDULE

LOCATION	EARTH EXCAVATION	CHANNEL EXCAVATION	SHRINKAGE FACTOR	PERCENT USED	EXCAVATION ADJUSTED FOR SHRINKAGE	EMBANKMENT REQUIRED	EARTHWORK BALANCE
	CU.YD.	CU.YD.			CU.YD.	CU.YD.	CU.YD.
T.R. 196A / 1600 E ROAD							
STA. 6+50.00 TO STA. 9+36.25	118		25.00%	100.00%	89	1419	-1330
STA. 9+36.25 TO STA. 10+57.75		205	25.00%	70.00%	108		108
STA. 10+57.75 TO STA. 14+46.00	48		25.00%	100.00%	36	1775	-1739
TOTAL	166	205			233	3194	-2961
USE	165	205					2960

FUNISHED EXCAVATION 2960 CU YDS

FILE NAME = 190657-sht-typsections.dgn	USER NAME =	DESIGNED - J.R.B.	REVISED -
HAMPTON, LENZINI AND RENWICK, INC. 3085 STEVENSON DRIVE, SUITE 201 SPRINGFIELD, ILLINOIS 62703 ILLINOIS PROFESSIONAL DESIGN FIRM LS / PE / SE CORP. 184.000959		DRAWN - T.D.S.	REVISED -
	PLOT SCALE = $SCALE$	CHECKED - S.W.M.	REVISED -
	PLOT DATE = 3/18/2022	DATE - 03/18/2022	REVISED -

STATE OF ILLINOIS
CHRISTIAN COUNTY HIGHWAY DEPARTMENT

TYPICAL CROSS SECTIONS

SCALE: NONE | SHEET NO. 1 OF 1 SHEETS | STA. 6+50 TO STA. 14+46

T.R.	SECTION	COUNTY	TOTAL SHEETS	SHEET NO.
3	19-07116-00-BR	CHRISTIAN	33	3
LOCUST ROAD DISTRICT		CONTRACT NO. 93789		
		ILLINOIS	FED. AID PROJECT 9EXR(862)	

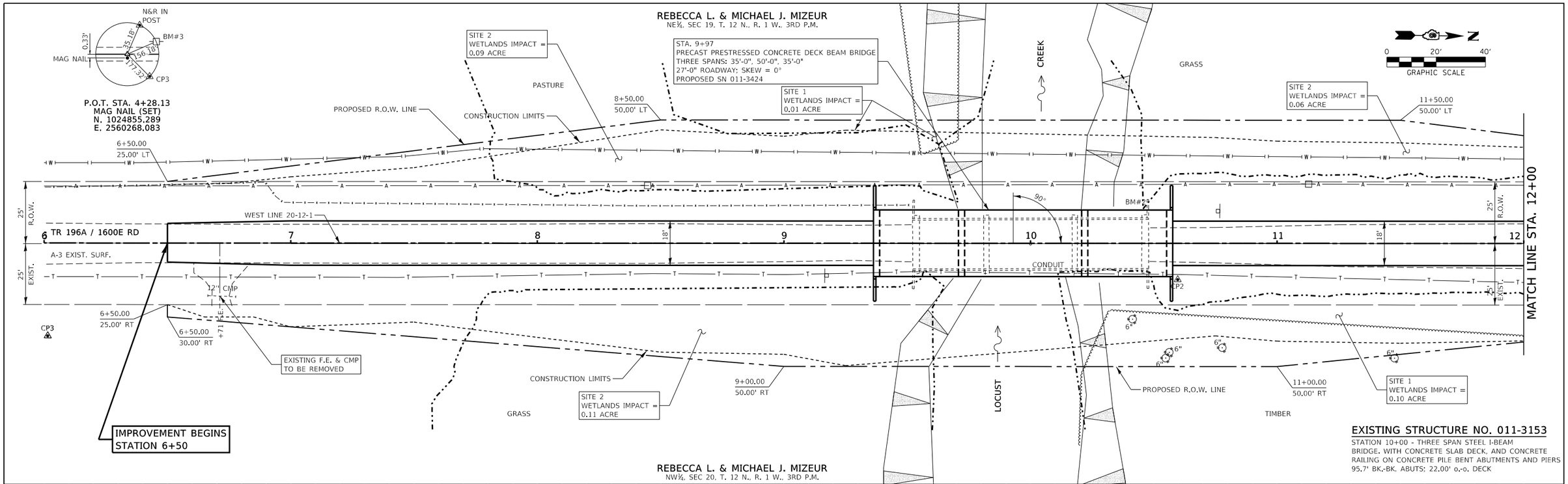

PLAN
SURVEYED
PLOTTED
ALIGNMENT CHECKED
RT. OF WAY CHECKED
CADD FILE NAME
NOTE BOOK
NO.
BY
DATE

PROFILE
SURVEYED
PLOTTED
GRADES CHECKED
B.M. NOTED
STRUCTURE NOTATNS CHKD
NOTE BOOK
NO.
BY
DATE

FILE NAME = 190657-sht-plnprf.dgn	USER NAME =	DESIGNED - S.A.A.	REVISED -	STATE OF ILLINOIS CHRISTIAN COUNTY HIGHWAY DEPARTMENT	PLAN & PROFILE 1600E ROAD
HAMPTON, LENZINI AND RENWICK, INC. 3085 STEVENSON DRIVE, SUITE 201 SPRINGFIELD, ILLINOIS 62703 ILLINOIS PROFESSIONAL DESIGN FIRM LS / PE / SE CORP. 184.000959		DRAWN - T.W.K.	REVISED -		
	PLOT SCALE = $SCALE$	CHECKED - J.W.F.	REVISED -		
	PLOT DATE = 3/18/2022	DATE - 03/18/2022	REVISED -		SCALE: 5V:20H · SHEET NO. 1 OF 2 SHEETS · STA. 6+00.00 TO STA. 12+00.00

T.R.	SECTION	COUNTY	TOTAL SHEETS	SHEET NO.
196A	19-07116-00-BR	CHRISTIAN	33	4
LOCUST ROAD DISTRICT		CONTRACT NO. 93789		
		ILLINOIS FED. AID PROJECT 9EXR(862)		

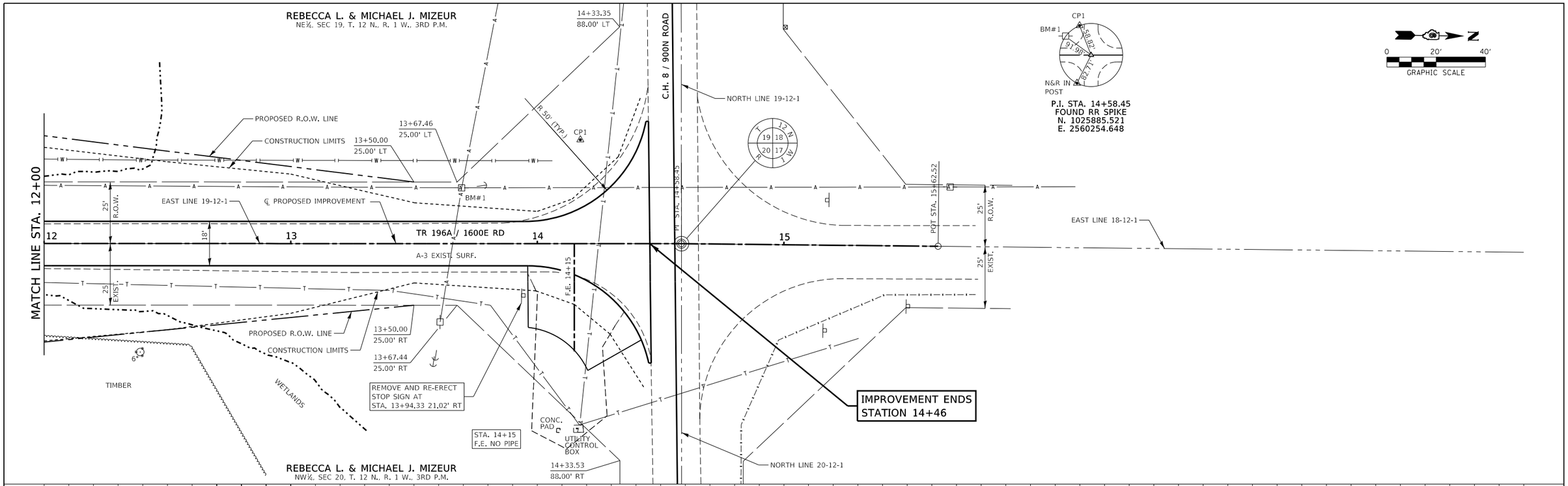

PLAN	BY	DATE
SURVEYED		
PLOTTED		
ALIGNMENT CHECKED		
RT. OF WAY CHECKED		
CADD FILE NAME		
NOTE BOOK NO.		

PROFILE	BY	DATE
SURVEYED		
PLOTTED		
GRADES CHECKED		
B.M. NOTED		
STRUCTURE NOTAT'NS CH'KD		
NOTE BOOK NO.		

FILE NAME = 190657-sht-plnprf.dgn	USER NAME =	DESIGNED - S.A.A.	REVISED -
HAMPTON, LENZINI AND RENWICK, INC. 3085 STEVENSON DRIVE, SUITE 201 SPRINGFIELD, ILLINOIS 62703		DRAWN - T.W.K.	REVISED -
ILLINOIS PROFESSIONAL DESIGN FIRM LS / PE / SE CORP. 184.000959	PLOT SCALE = $SCALE$	CHECKED - J.W.F.	REVISED -
	PLOT DATE = 3/18/2022	DATE - 03/18/2022	REVISED -

STATE OF ILLINOIS
CHRISTIAN COUNTY HIGHWAY DEPARTMENT

PLAN & PROFILE
1600E ROAD

SCALE: 5V:20H | SHEET NO. 2 OF 2 SHEETS | STA. 12+00.00 TO STA. 15+62.52

T.R.	SECTION	COUNTY	TOTAL SHEETS	SHEET NO.
196A	19-07116-00-BR	CHRISTIAN	33	5
LOCUST ROAD DISTRICT		CONTRACT NO. 93789		
		ILLINOIS FED. AID PROJECT 9EXR(862)		

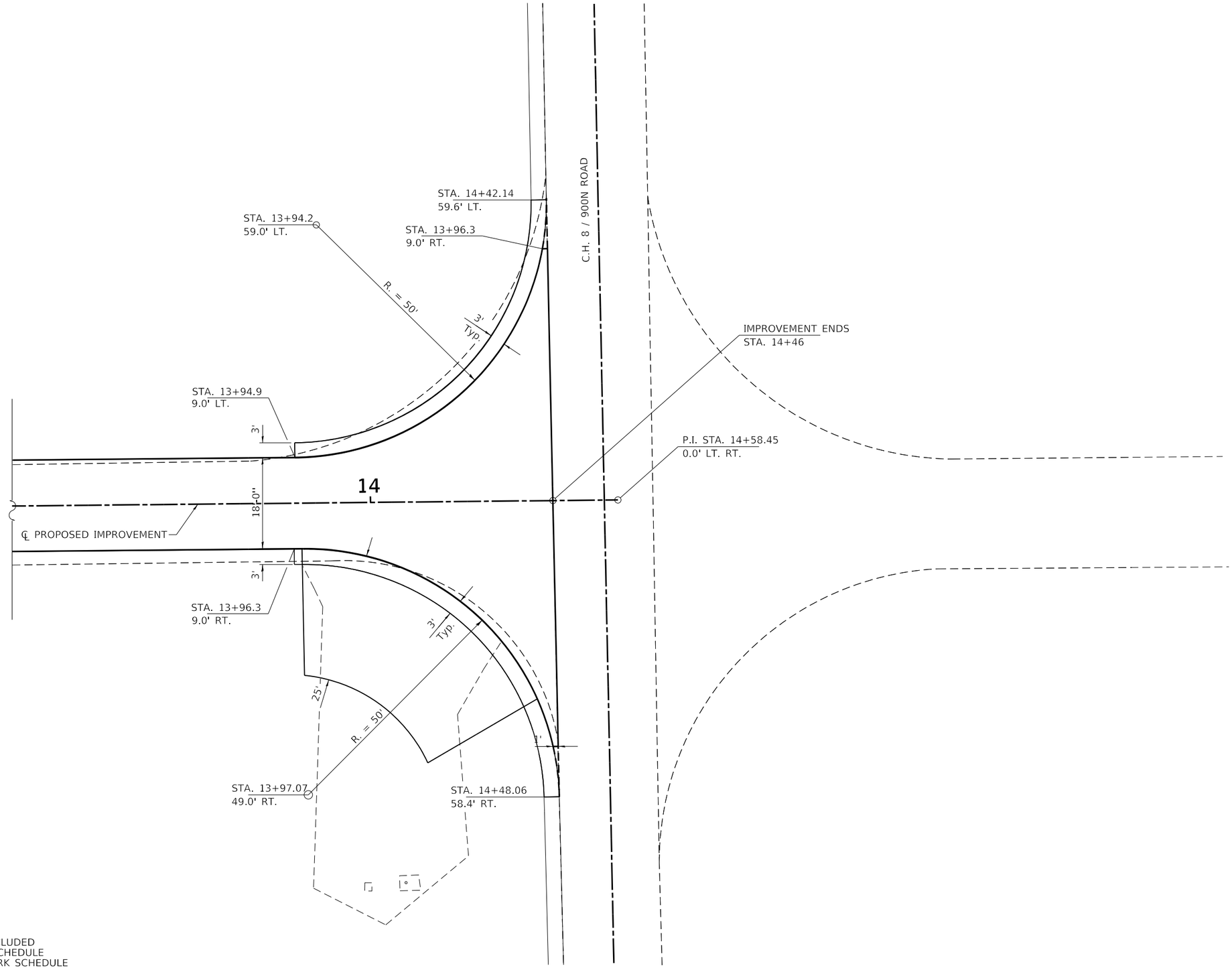

NOTE: QUANTITIES INCLUDED
IN ROADWAY SCHEDULE
AND EARTHWORK SCHEDULE

FILE NAME = 190657-sht-Intersection Detail.dgn	USER NAME =	DESIGNED - J.R.B.	REVISED -	STATE OF ILLINOIS CHRISTIAN COUNTY HIGHWAY DEPARTMENT	INTERSECTION DETAIL				T.R.	SECTION	COUNTY	TOTAL SHEETS	SHEET NO.
HAMPTON, LENZINI AND RENWICK, INC. 3085 STEVENSON DRIVE, SUITE 201 SPRINGFIELD, ILLINOIS 62703		DRAWN - T.D.S.	REVISED -						3	19-07116-00-BR	CHRISTIAN	33	6
	PLOT SCALE = $SCALE$	CHECKED - S.W.M.	REVISED -						LOCUST ROAD DISTRICT		CONTRACT NO. 93789		
ILLINOIS PROFESSIONAL DESIGN FIRM LS / PE / SE CORP. 184.000959	PLOT DATE = 3/18/2022	DATE - 03/18/2022	REVISED -		SCALE: NONE	SHEET NO. 1 OF 1 SHEETS	STA. 6+50	TO STA. 14+46		ILLINOIS	FED. AID PROJECT 9EXR(862)		

EXISTING STRUCTURE NO. 011-3153: Sta. 10+00 - Three span I-beam bridge. With concrete slab deck, and concrete railing on concrete pile bent abutments and piers

Structure closed to traffic during construction.

No Salvage

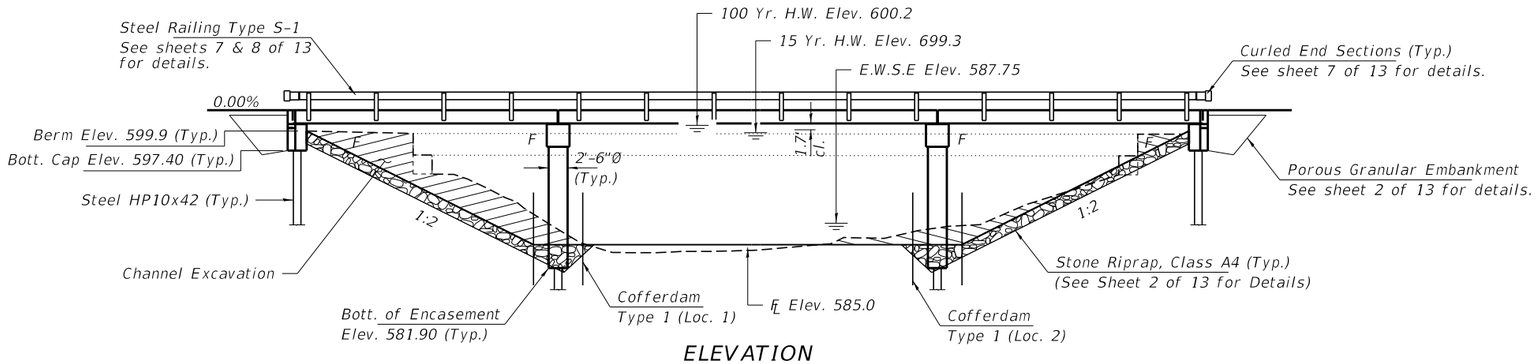

ELEVATION

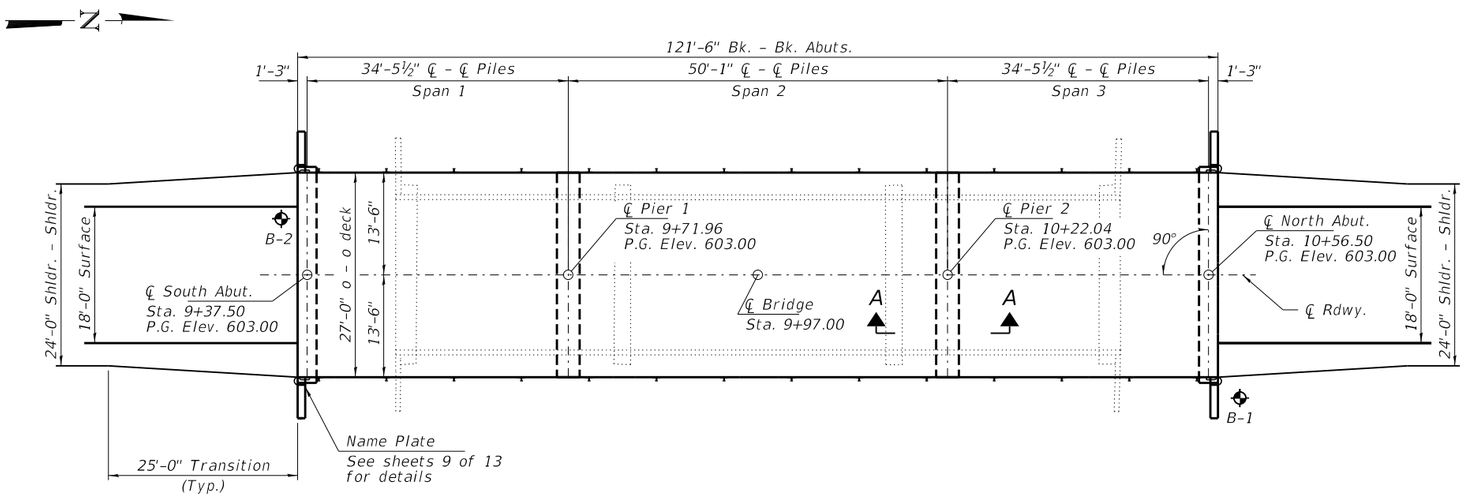

PLAN

GENERAL NOTES

Layout of the slope protection system may be varied to suit ground conditions in the field as directed by the Engineer.

The Contractor shall drive test piles to 110% of the nominal required bearing specified in production locations at North Abutment and Pier 1 or approved by the Engineer before ordering the remainder of piles.

All proposed construction activities shall be in accordance with Nationwide Permit number 14 of the Department of the Army authorized under Section 404 of the Clean Water Act.

Reinforcement bars designated (E) shall be epoxy coated.

Excavation required to construct the Abutments and Piers shall be included in the cost of Concrete Structures. No additional compensation will be allowed for Structure Excavation or Cofferdam Excavation.

INDEX OF STRUCTURE SHEETS

1. General Plan & Elevation
2. Riprap Details
3. 21"x36" PPC Deck Beam Spans 1&3
4. 21"x36" PPC Deck Beam Details Spans 1&3
5. 21"x36" PPC Deck Beam Span 2
6. 21"x36" PPC Deck Beam Details Span 2
7. Superstructure Details
8. Steel Railing, Type S-1
9. Abutments
10. Piers
11. HP Pile Details
12-13. Borings

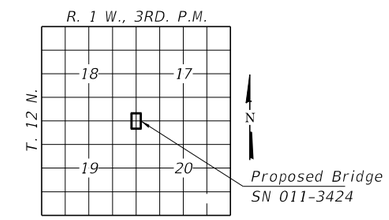

LOCATION SKETCH

LOCUST CREEK
BUILT 202_ BY
CHRISTIAN COUNTY
SEC. 19-07116-00-BR
LOCUST ROAD DISTRICT
STR. NO. 011-3424
LOADING HL-93

NAME PLATE

See Std. 515001

DESIGN SPECIFICATIONS

2020 AASHTO LRFD Bridge Design Specifications, 9th Edition with all interims.

LOADING HL-93

Allow 50#/sq. ft. for future wearing surface.

DESIGN STRESSES

FIELD UNITS

f'c = 3,500 psi
f'Y = 60,000 psi (Reinf.)

PRECAST PRESTRESSED UNITS

f'c = 6,000 psi
f'ci = 3,500 psi
fpu = 270,000 psi (½"Ø low lax. strands)
fpbt = 201,960 psi (½"Ø low lax. strands)
fy = 60,000 psi (Reinf.)

SEISMIC DATA

Seismic Performance Zone (SPZ) = 2
Design Spectral Acceleration at 1.0 sec. (SD1) = 0.177g
Design Spectral Acceleration at 0.2 sec. (SDS) = 0.356g
Soil Site Class = D

DESIGN SCOUR ELEVATION TABLE

Event/Limit State	Design Scour Elevations (ft.)				Item 113
	S. Abut.	Pier 1	Pier 2	N. Abut.	
Q100	597.4	570.5	570.5	597.4	5
Q200	597.4	569.4	569.4	597.4	
Design	597.4	571.2	571.2	597.4	
Check	597.4	569.7	569.7	597.4	

WATERWAY INFORMATION

Drainage Area = 30.9 Sq. Mi.
Existing Low Grade Elev. 599.2 at Sta. 11+50
Proposed Low Grade Elev. 603.0 at Sta. 11+50

Flood	Freq. Yr.	Q C.F.S.	Opening Sq. Ft.		Nat. H.W.E.	Head - Ft.		Headwater El.	
			Exist.	Prop.		Exist.	Prop.	Exist.	Prop.
Ten-Year	10	3,190	750	1,140	599.1	0.4	0.1	599.5	599.2
Design	15	3,670	750	1,150	599.3	0.5	0.1	599.8	599.4
Base	100	5,980	750	1,260	600.2	0.9	0.4	601.1	600.6
Scour Check	200	6,880	750	1,310	600.7	0.9	0.4	601.6	601.1
Max Calc	500	8,060	750	1,350	601.3	0.8	0.7	602.1	602.0

Note: Low water approach grade to remain in place

I certify that to the best of my knowledge, information and belief, this bridge design is structurally adequate for the design loading shown on the plans. The design is an economical one for the style of structure and complies with requirements of the current "AASHTO LRFD Specifications."

Steven W. Megginson 04/08/2021
ILLINOIS STRUCTURAL NO. 081-6064

LICENSED STRUCTURAL ENGINEER
STEVEN W. MEGGINSON
081-6064
SPRINGFIELD, IL.
STATE OF ILLINOIS

Expires 11-30-2022

TOTAL BILL OF MATERIAL

ITEM	UNIT	SUPER	SUB	TOTAL
Channel Excavation	Cu. Yd.			205
Porous Granular Embankment	Cu. Yd.		70	70
Stone Riprap, Class A4	Ton			700
Filter Fabric	Sq. Yd.			760
Removal of Existing Structures	Each			1
Cofferdam (Type 1) (Location 1)	Each		1	1
Cofferdam (Type 1) (Location 2)	Each		1	1
Concrete Structures	Cu. Yd.		45.2	45.2
Concrete Encasement	Cu. Yd.		18.2	18.2
Precast Prestressed Conc. Deck Beams (21" Depth)	Sq. Ft.	3,240		3,240
Reinforcement Bars, Epoxy Coated	Pound		5,320	5,320
Steel Railing, Type S-1	Foot	236		236
Furnishing Steel Piles HP10x42	Foot		1,050	1,050
Driving Piles	Foot		1,050	1,050
Test Pile Steel HP10x42	Each		2	2
Pipe Underdrains for Structure	Foot		120	120
Name Plates	Each		1	1
Terminal Marker - Direct Applied	Each	4		4

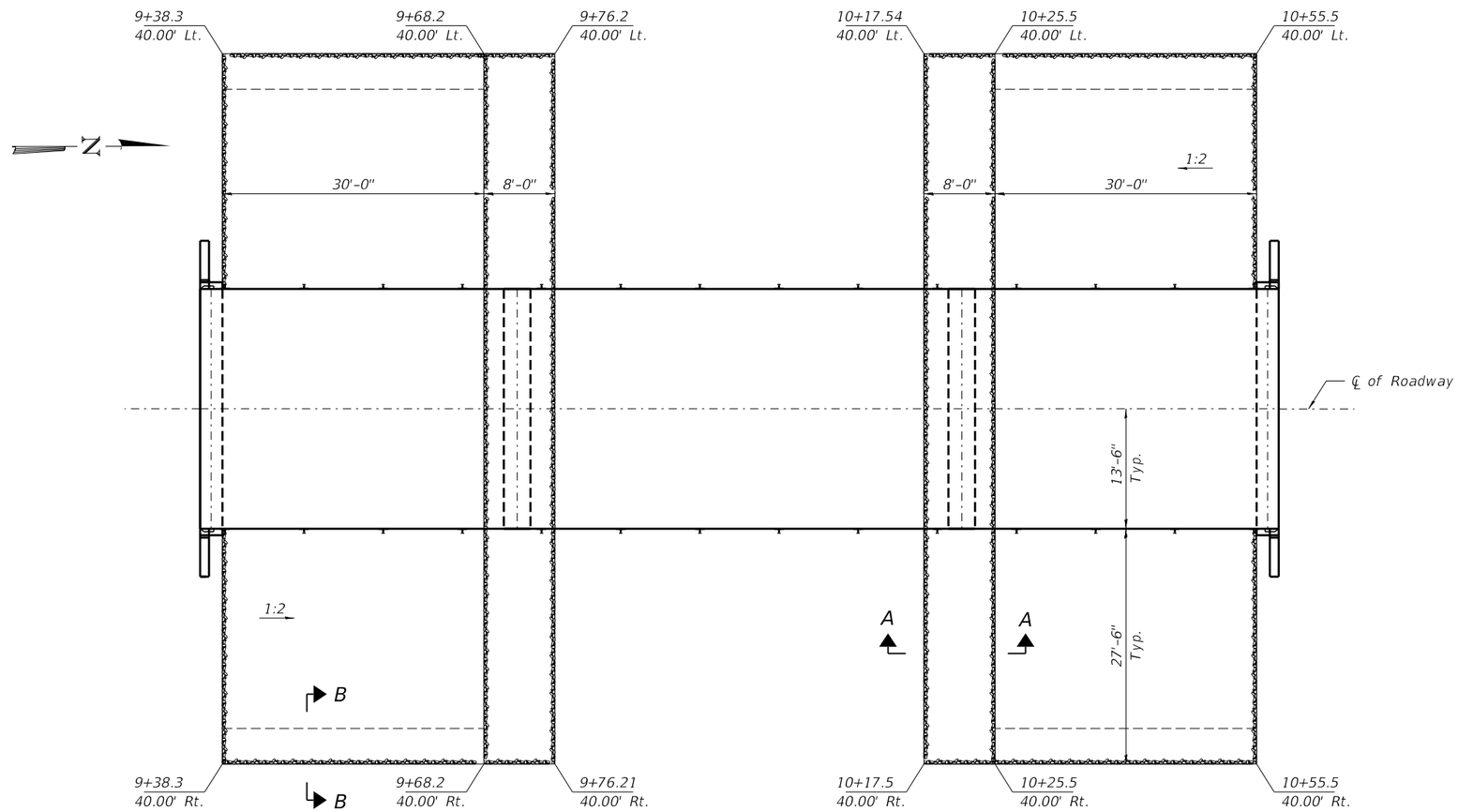

PLAN

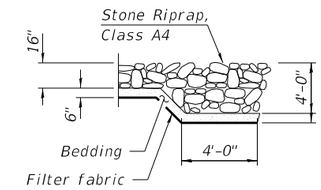

SECTION B-B

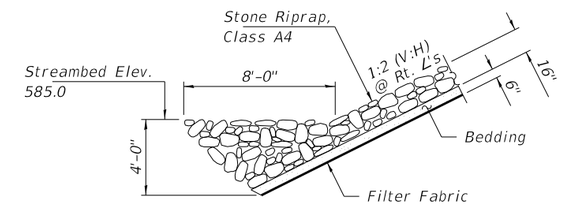

SECTION A-A

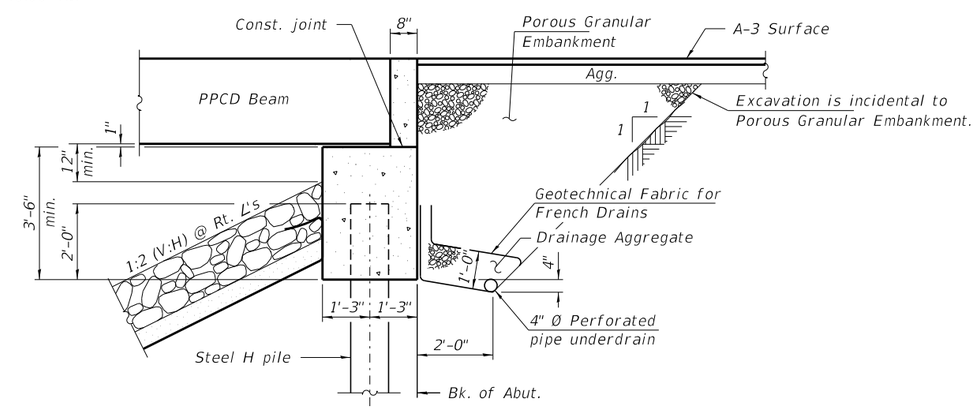

SECTION THRU ABUTMENT

(Horiz. dim. @ Rt. L's)

Precast Headwalls for pipe drains shall be provided at each outlet. Cost included in the cost of Pipe Underdrains for Structures.

Note:
All drainage system components shall extend to 2'-0" from the end of each wingwall except an outlet pipe shall extend until intersecting with the side slopes. The pipes shall drain into concrete headwalls. (See Article 601.05 of the Standard Specifications and Highway Standard 601101).

FILE NAME = 190657-shl-bridge.dgn	USER NAME =	DESIGNED - J.R.B.	REVISED -	STATE OF ILLINOIS CHRISTIAN COUNTY HIGHWAY DEPARTMENT	RIPRAP DETAILS STRUCTURE NO. 011-3424	T.R.	SECTION	COUNTY	TOTAL SHEETS / SHEET NO.
HAMPTON, LENZINI AND RENWICK, INC. 3085 STEVENSON DRIVE, SUITE 201 SPRINGFIELD, ILLINOIS 62703		CHECKED - S.W.M.	REVISED -			196A	19-07116-00-BR	CHRISTIAN	33 / 8
	PLOT SCALE = $SCALE$	DRAWN - T.D.S.	REVISED -			LOCUST ROAD DISTRICT		CONTRACT NO. 93789	
ILLINOIS PROFESSIONAL DESIGN FIRM LS / PE / SE CORP. 184.000959	PLOT DATE = 3/18/2022	CHECKED - S.W.M.	REVISED -		SHEET NO. 2 OF 13 SHEETS		ILLINOIS	FED. AID PROJECT 9EXR(862)	

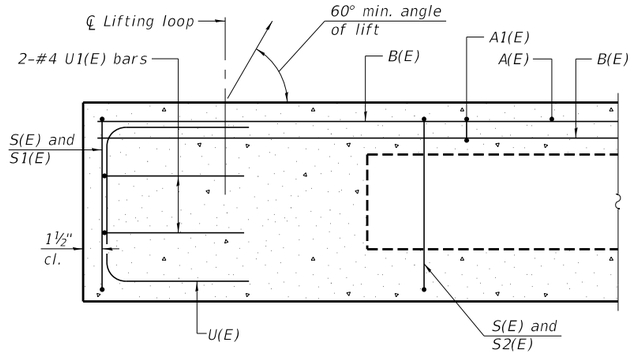

SECTION A-A

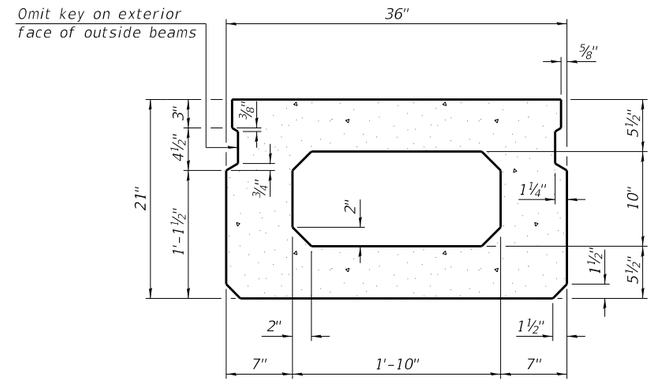

SECTION B-B
(Showing dimensions)

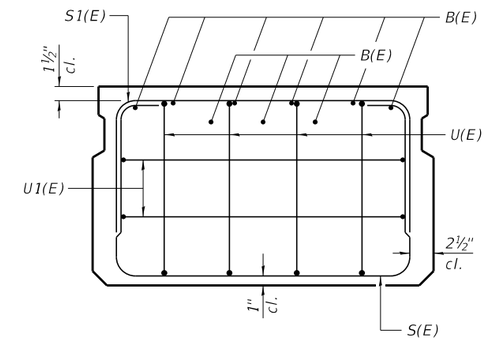

VIEW C-C

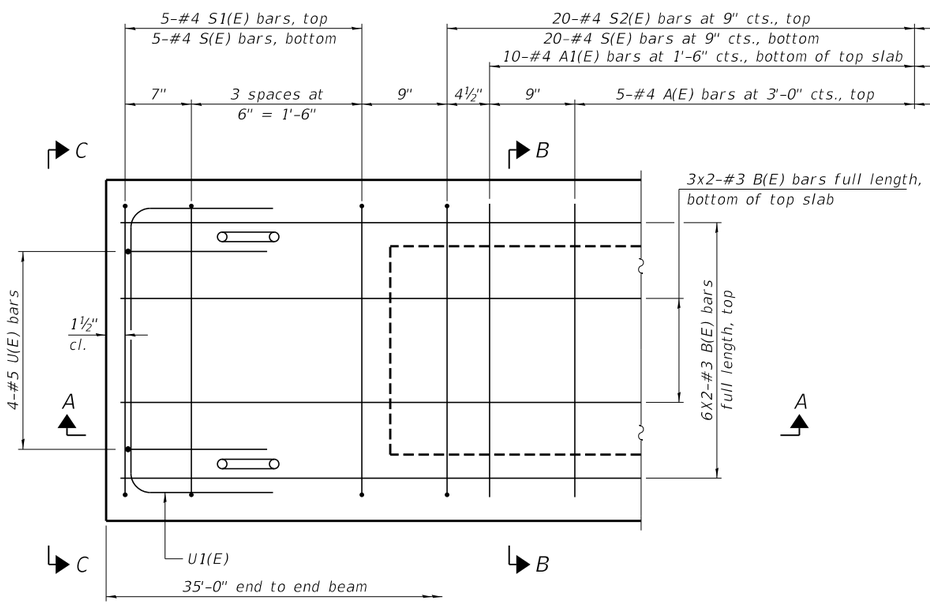

PLAN VIEW

Note:
Spacing of S(E) and S2(E) bars may be adjusted up to 4" in the immediate area of the transverse tie diaphragms to miss the block outs for the transverse ties.
Bars indicated thus 6x2-#3 etc. indicates 6 lines of bars with 2 lengths per line.

Symmetrical about ℄

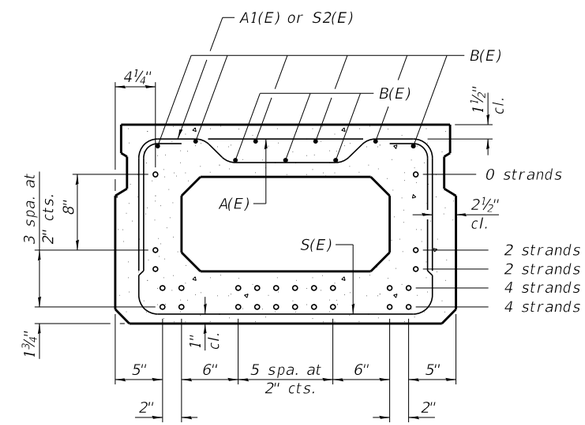

SECTION B-B
(Showing reinforcement and permissible strand locations)

Note:
Place the number of strands specified in each row symmetrically about the centerline of beam in the permissible strand locations shown.

MINIMUM BAR LAP
#3 bar = 1'-6"

BAR LIST
ONE BEAM ONLY
(For information only)

Bar	No.	Size	Length	Shape
A(E)	10	#4	2'-7"	—
A1(E)	20	#4	2'-10"	~
B(E)	18	#3	18'-2"	—
S(E)	50	#4	6'-5"	⊔
S1(E)	10	#4	4'-11"	⊓
S2(E)	40	#4	5'-2"	⊓
U(E)	8	#5	4'-0"	⊏
U1(E)	4	#4	5'-0"	⊓

Note:
See sheets 4 & 7 of 13 for additional details and Bill of Material.

PD-2136-0 1-1-2020

FILE NAME = 190657-sht-brdge.dgn	USER NAME =	DESIGNED - J.R.B.	REVISED -	STATE OF ILLINOIS CHRISTIAN COUNTY HIGHWAY DEPARTMENT	21" x 36" PPC DECK BEAM SPANS 1 & 3 STRUCTURE NO. 011-3424
HAMPTON, LENZINI AND RENWICK, INC. 3085 STEVENSON DRIVE, SUITE 201 SPRINGFIELD, ILLINOIS 62703 ILLINOIS PROFESSIONAL DESIGN FIRM LS / PE / SE CORP. 184.000959		CHECKED - S.W.M.	REVISED -		
	PLOT SCALE = $SCALE$	DRAWN - T.D.S.	REVISED -		
	PLOT DATE = 3/18/2022	CHECKED - S.W.M.	REVISED -		SHEET NO. 3 OF 13 SHEETS

T.R.	SECTION	COUNTY	TOTAL SHEETS	SHEET NO.
196A	19-07116-00-BR	CHRISTIAN	33	9
LOCUST ROAD DISTRICT		CONTRACT NO. 93789		
		ILLINOIS FED. AID PROJECT 9EXR(862)		

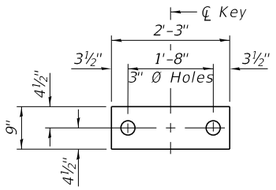

FABRIC BEARING PAD
(Interior - 16 req'd)

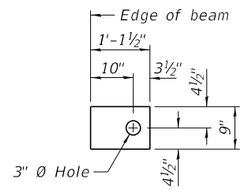

FABRIC BEARING PAD
(Exterior - 4 req'd)

FIXED

Notes:
All bearing pads shall be 1" thick.
Omit holes when using expansion bearings.
Expansion bearing pads shall be bonded to the substructure.

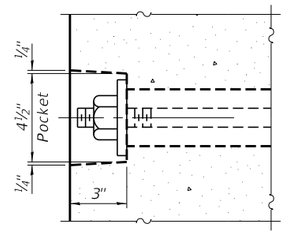

SECTION A-A

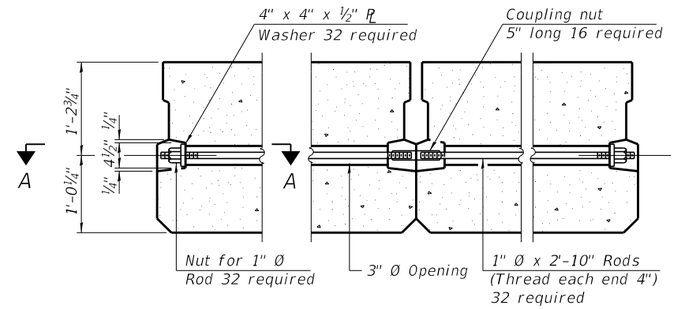

TYPICAL TRANSVERSE TIE ASSEMBLY

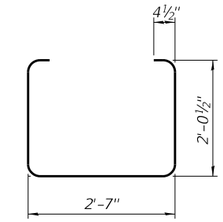

BAR S(E)

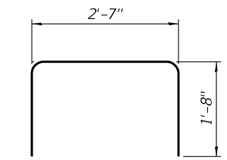

BAR S1(E)

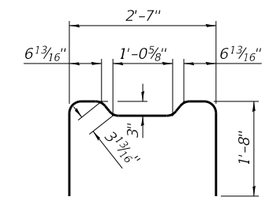

BAR S2(E)

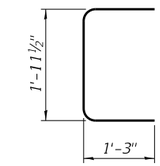

BAR U(E)

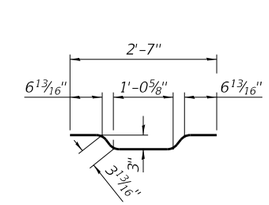

BAR A1(E)

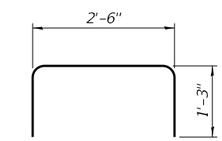

BAR U1(E)

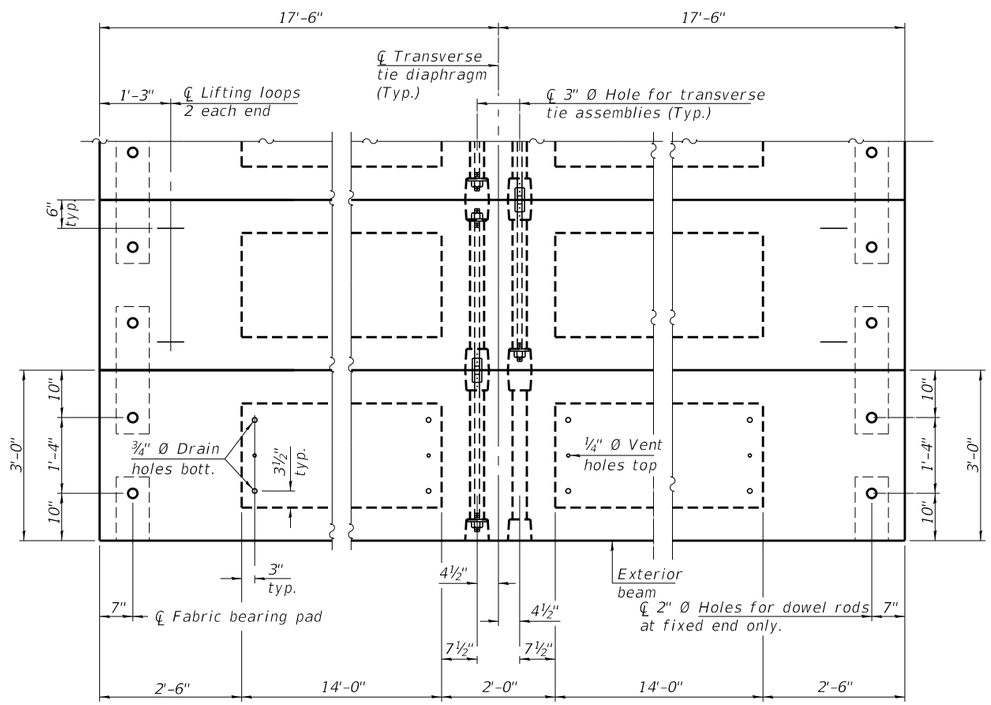

PLAN VIEW

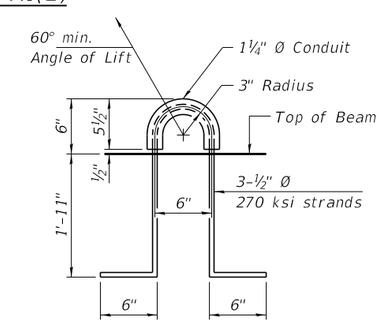

LIFTING LOOP DETAIL

Note:
Connect beams in pairs with the transverse tie configuration shown.

NOTES

Prestressing steel shall be uncoated high strength, low relaxation 7-wire strand, Grade 270. The nominal diameter shall be ½" and the nominal cross-sectional area shall be 0.153 sq. in.

The 1" Ø rods in the transverse tie assembly shall be tightened to a snug fit and the threads set. Pockets on exterior faces of bridge shall be filled with grout after transverse tie assembly is in place.

Two ⅛" fabric adjusting shims of the dimensions of the exterior bearing pad shall be provided for each bearing pad location.

A minimum 2½" Ø lifting pin shall be used to engage the lifting loops during handling.

Corrosion Inhibitor, per Article 1020.05(b)(10) and 1021.07 of the Standard Specifications, shall be used in the concrete for precast prestressed concrete deck beams.

Compressive strength of prestressed concrete, f'c, shall be 6000 psi.

Compressive strength of prestressed concrete at release, f'ci, shall be 5000 psi.

Reinforcement bars designated (E) shall be epoxy coated.

BILL OF MATERIAL

Precast Prestressed Conc. Deck Bms. (21" depth)	Sq. Ft.	1,890

PDD-2736-0 1-1-2020

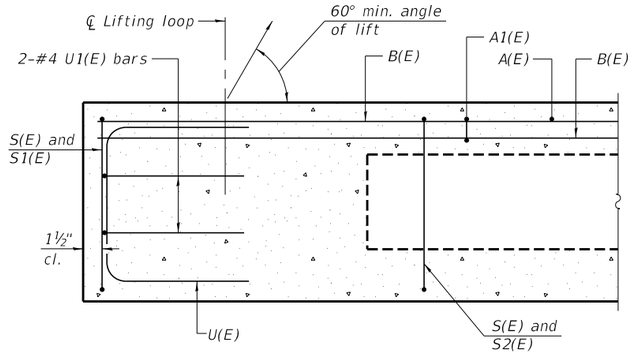

SECTION A-A

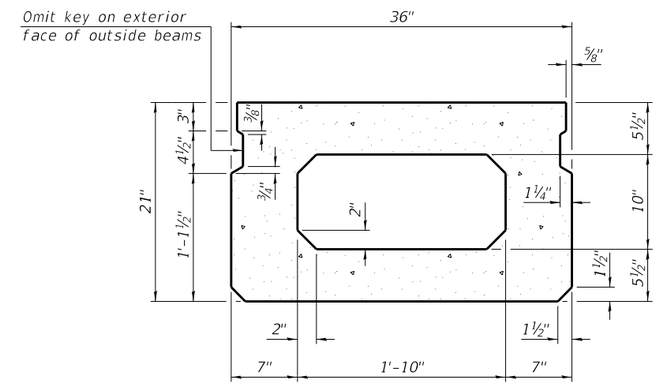

SECTION B-B
(Showing dimensions)

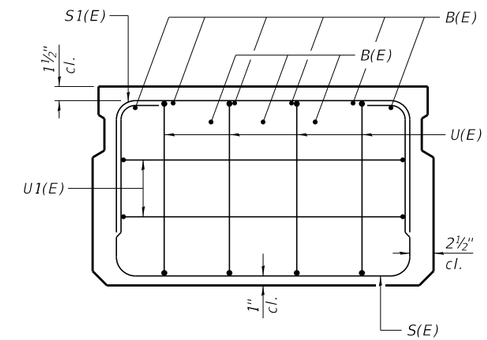

VIEW C-C

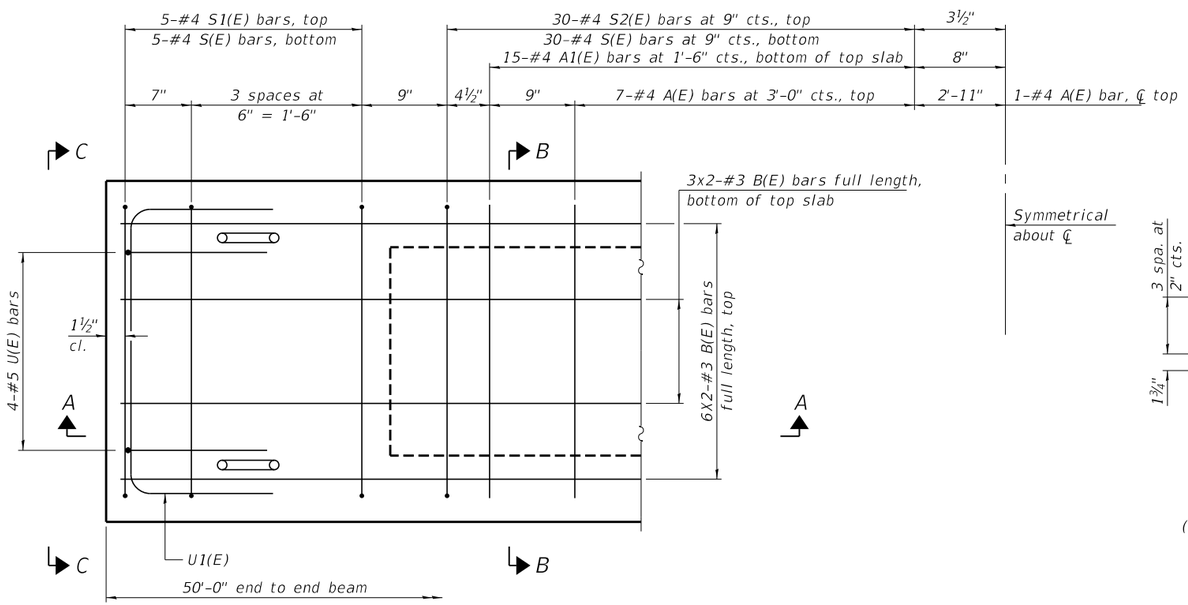

PLAN VIEW

Note:
Spacing of S(E) and S2(E) bars may be adjusted up to 4" in the immediate area of the transverse tie diaphragms to miss the block outs for the transverse ties.
Bars indicated thus 6x2-#3 etc. indicates 6 lines of bars with 2 lengths per line.

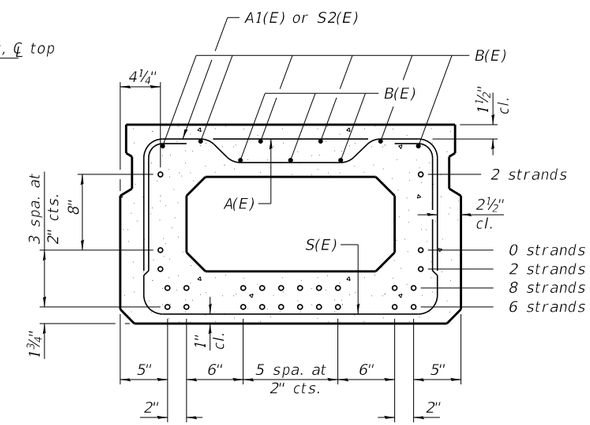

SECTION B-B
(Showing reinforcement and permissible strand locations)

Note:
Place the number of strands specified in each row symmetrically about the centerline of beam in the permissible strand locations shown.

MINIMUM BAR LAP
#3 bar = 1'-6"

BAR LIST
ONE BEAM ONLY
(For information only)

Bar	No.	Size	Length	Shape
A(E)	15	#4	2'-7"	—
A1(E)	30	#4	2'-10"	~
B(E)	18	#3	25'-8"	—
S(E)	70	#4	6'-5"	⊔
S1(E)	10	#4	4'-11"	⊓
S2(E)	60	#4	5'-2"	⊓
U(E)	8	#5	4'-0"	⊏
U1(E)	4	#4	5'-0"	⊓

Note:
See sheets 6 & 7 of 13 for additional details and Bill of Material.

PD-2136-0 1-1-2020

FILE NAME = 190657-sht-brdge.dgn	USER NAME =	DESIGNED - J.R.B.	REVISED -	STATE OF ILLINOIS CHRISTIAN COUNTY HIGHWAY DEPARTMENT	21" x 36" PPC DECK BEAM SPAN 2 STRUCTURE NO. 011-3424
HAMPTON, LENZINI AND RENWICK, INC. 3085 STEVENSON DRIVE, SUITE 201 SPRINGFIELD, ILLINOIS 62703 ILLINOIS PROFESSIONAL DESIGN FIRM LS / PE / SE CORP. 184.000959		CHECKED - S.W.M.	REVISED -		
	PLOT SCALE = $SCALE$	DRAWN - T.D.S.	REVISED -		
	PLOT DATE = 3/18/2022	CHECKED - S.W.M.	REVISED -		SHEET NO. 5 OF 13 SHEETS

T.R.	SECTION	COUNTY	TOTAL SHEETS	SHEET NO.
196A	19-07116-00-BR	CHRISTIAN	33	11
LOCUST ROAD DISTRICT		CONTRACT NO. 93789		
		ILLINOIS FED. AID PROJECT 9EXR(862)		

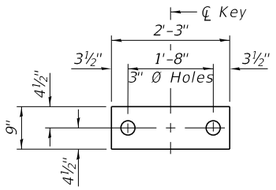

FABRIC BEARING PAD
(Interior - 16 req'd)

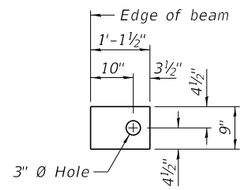

FABRIC BEARING PAD
(Exterior - 4 req'd)

FIXED

Notes:
All bearing pads shall be 1" thick.
Omit holes when using expansion bearings.
Expansion bearing pads shall be bonded to the substructure.

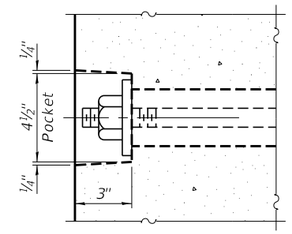

SECTION A-A

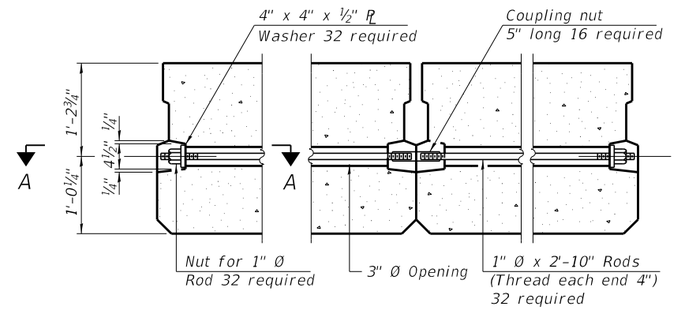

TYPICAL TRANSVERSE TIE ASSEMBLY

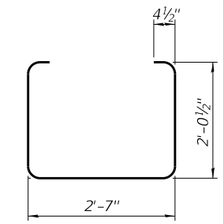

BAR S(E)

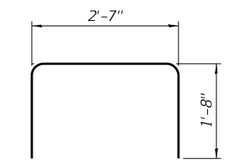

BAR S1(E)

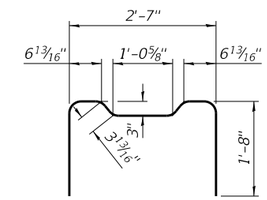

BAR S2(E)

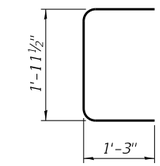

BAR U(E)

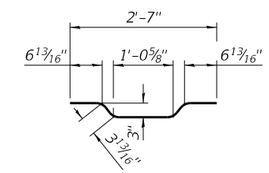

BAR A1(E)

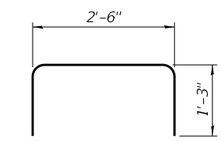

BAR U1(E)

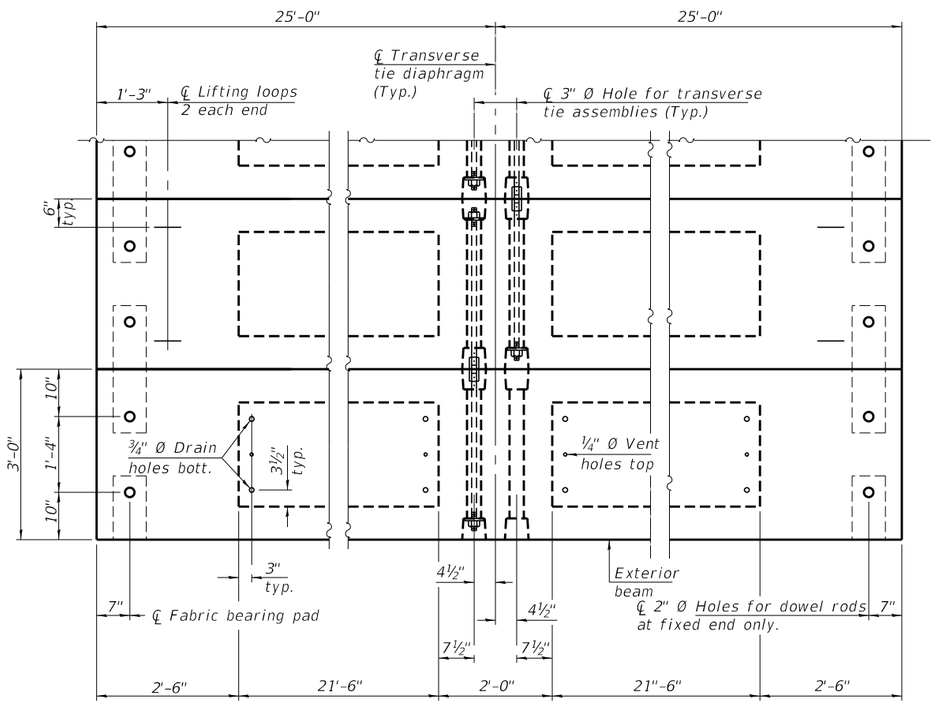

PLAN VIEW

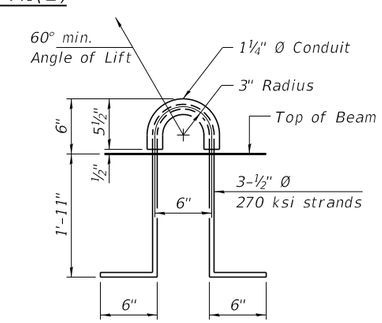

LIFTING LOOP DETAIL

Note:
Connect beams in pairs with the transverse tie configuration shown.

NOTES

Prestressing steel shall be uncoated high strength, low relaxation 7-wire strand, Grade 270. The nominal diameter shall be ½" and the nominal cross-sectional area shall be 0.153 sq. in.

The 1" Ø rods in the transverse tie assembly shall be tightened to a snug fit and the threads set. Pockets on exterior faces of bridge shall be filled with grout after transverse tie assembly is in place.

Two ⅛" fabric adjusting shims of the dimensions of the exterior bearing pad shall be provided for each bearing pad location.

A minimum 2½" Ø lifting pin shall be used to engage the lifting loops during handling.

Corrosion Inhibitor, per Article 1020.05(b)(10) and 1021.07 of the Standard Specifications, shall be used in the concrete for precast prestressed concrete deck beams.

Compressive strength of prestressed concrete, f'c, shall be 6000 psi.

Compressive strength of prestressed concrete at release, f'ci, shall be 5000 psi.

Reinforcement bars designated (E) shall be epoxy coated.

BILL OF MATERIAL

Precast Prestressed Conc. Deck Bms. (21" depth)	Sq. Ft.	1,350

PDD-2736-0 1-1-2020

FILE NAME = 190657-shl-bridge.dgn	USER NAME =	DESIGNED - J.R.B.	REVISED -
HAMPTON, LENZINI AND RENWICK, INC. 3085 STEVENSON DRIVE, SUITE 201 SPRINGFIELD, ILLINOIS 62703 ILLINOIS PROFESSIONAL DESIGN FIRM LS / PE / SE CORP. 184.000959		CHECKED - S.W.M.	REVISED -
	PLOT SCALE = $SCALE$	DRAWN - T.D.S.	REVISED -
	PLOT DATE = 3/18/2022	CHECKED - S.W.M.	REVISED -

STATE OF ILLINOIS
CHRISTIAN COUNTY HIGHWAY DEPARTMENT

21" x 36" PPC DECK BEAM DETAILS SPAN 2
STRUCTURE NO. 011-3424

SHEET NO. 6 OF 13 SHEETS

T.R.	SECTION	COUNTY	TOTAL SHEETS	SHEET NO.
196A	19-07116-00-BR	CHRISTIAN	33	12
LOCUST ROAD DISTRICT		CONTRACT NO. 93789		
		ILLINOIS	FED. AID PROJECT 9EXR(862)	

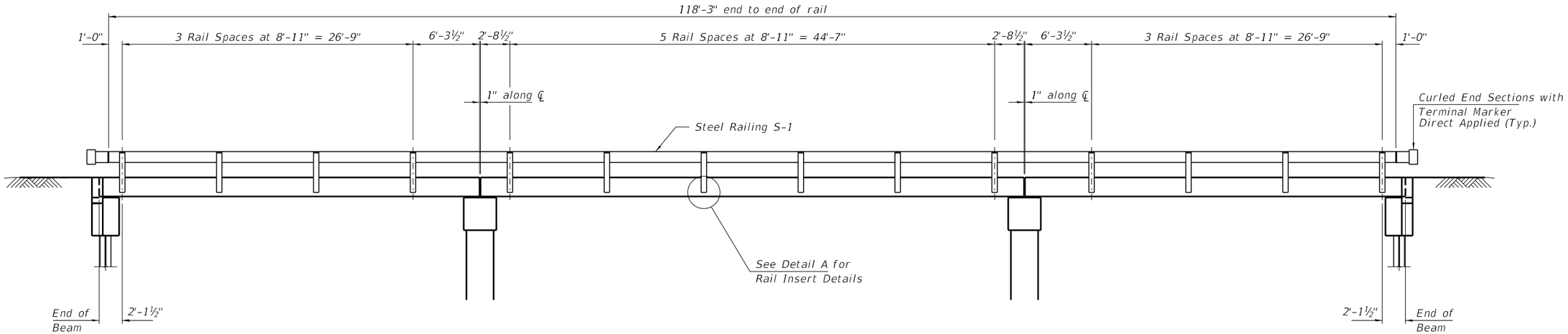

ELEVATION

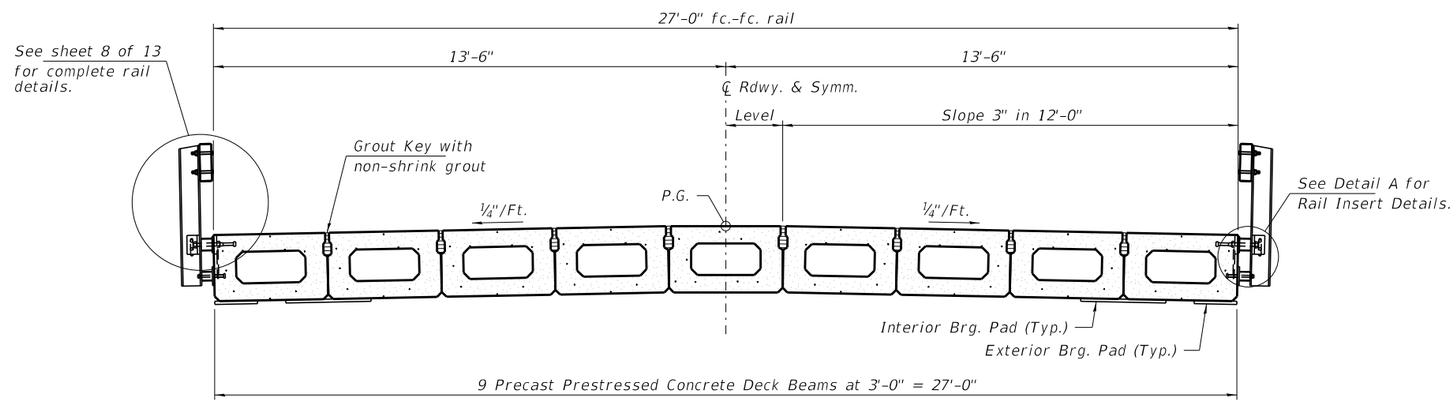

CROSS SECTION

See sheets 3-6 & 13 for Superstructure.

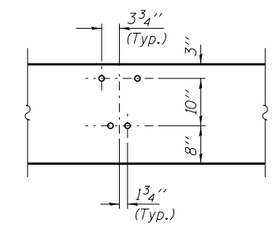

DETAIL A

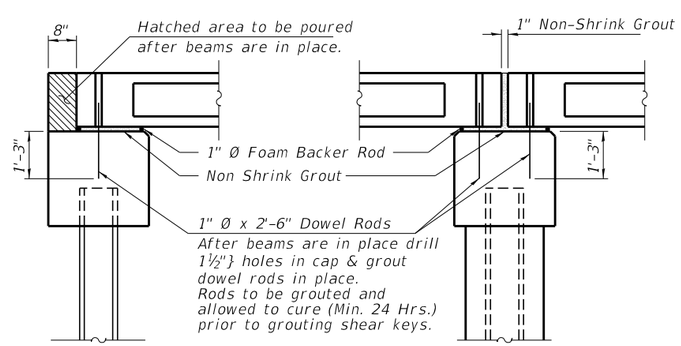

SECTION AT ABUTMENTS

at Rt. ∠'s

SECTION AT PIERS

at Rt. ∠'s

Note: Cost of curled end sections shall be included with the Steel Railing. (4 Required)

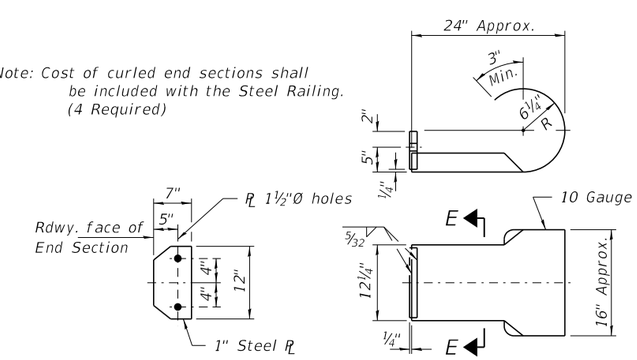

SECTION E-E

CURLED END SECTION DETAILS

FILE NAME = 190657-shl-bridge.dgn	USER NAME =	DESIGNED - J.R.B.	REVISED -	STATE OF ILLINOIS CHRISTIAN COUNTY HIGHWAY DEPARTMENT	SUPERSTRUCTURE DETAILS STRUCTURE NO. 011-3424	T.R.	SECTION	COUNTY	TOTAL SHEETS	SHEET NO.
HAMPTON, LENZINI AND RENWICK, INC. 3365 STEVENSON DRIVE, SUITE 201 SPRINGFIELD, ILLINOIS 62703 ILLINOIS PROFESSIONAL DESIGN FIRM LS / PE / SE CORP. 184.000959		CHECKED - S.W.M.	REVISED -			196A	19-07116-00-BR	CHRISTIAN	33	13
	PLOT SCALE = $SCALE$	DRAWN - T.D.S.	REVISED -			LOCUST ROAD DISTRICT		CONTRACT NO. 93789		
	PLOT DATE = 3/18/2022	CHECKED - S.W.M.	REVISED -		SHEET NO. 7 OF 13 SHEETS		ILLINOIS	FED. AID PROJECT 9EXR(862)		

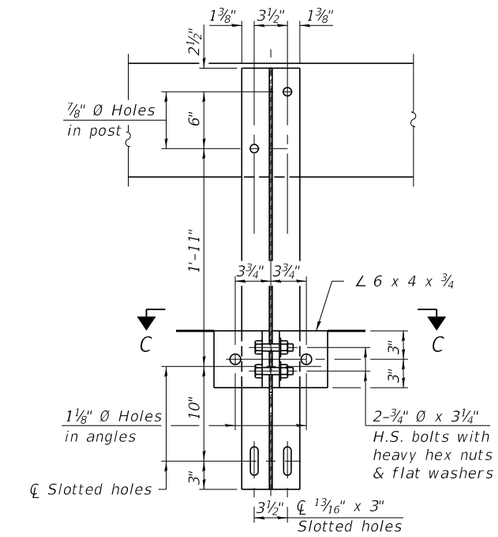

SECTION B-B

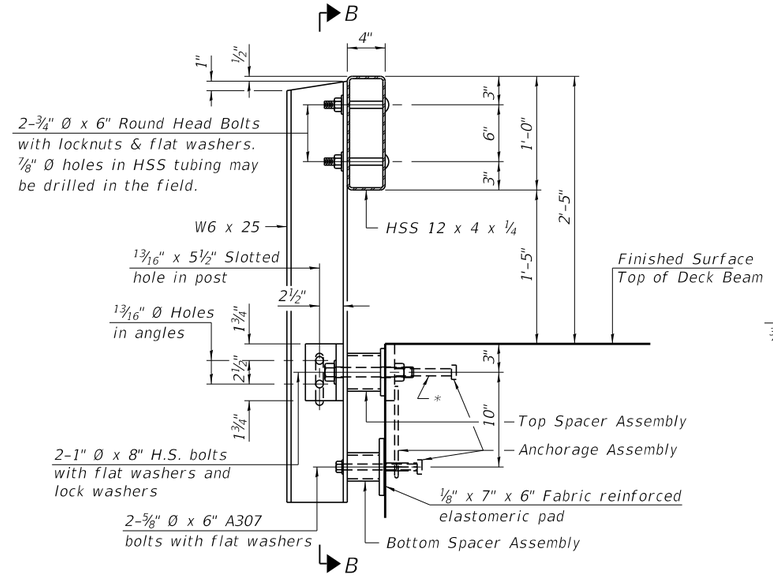

SECTION AT RAILING POST

* The outermost longitudinal reinforcement bar shall be placed directly above the studs of the rail post anchorage assembly. The anchorage studs may be bent down ½" to accommodate the top reinforcement bar placement.

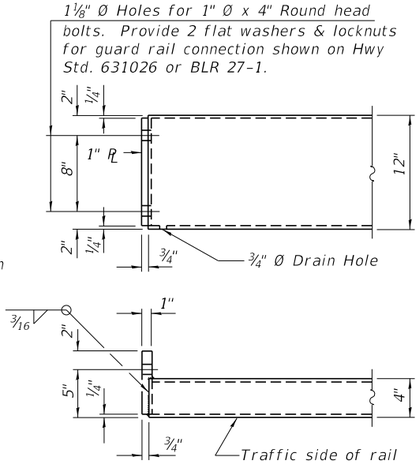

END OF RAIL DETAILS

Notes:

A sufficient number of shims of various thicknesses, sized to fit behind the top spacer assembly, 5" x 11½", and bottom spacer assembly, 6" x 7", shall be provided to adjust posts for proper alignment. If the summation of shims is greater than ¼" (top) or ½" (bottom), longer bolts are required. Cost included with Steel Railing, Type S-1.

All steel rail elements including shims shall be galvanized according to Article 509.05 of the Standard Specifications.

All HSS tubing serving as railing shall be CVN tested according to Article 1006.34(b) of the Standard Specifications.

Rail splice inserts may be built out of 2 -⅜" bent plates in lieu of the 4 plate rail splice inserts shown, provided the outside dimensions are matched.

All round head bolts shall be ASTM A307 with locknuts according to ASTM A563 grade A.

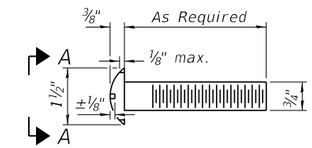

ROUND HEAD BOLT DETAIL

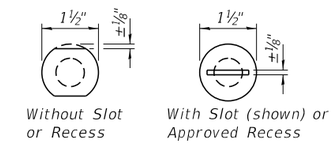

VIEW A-A

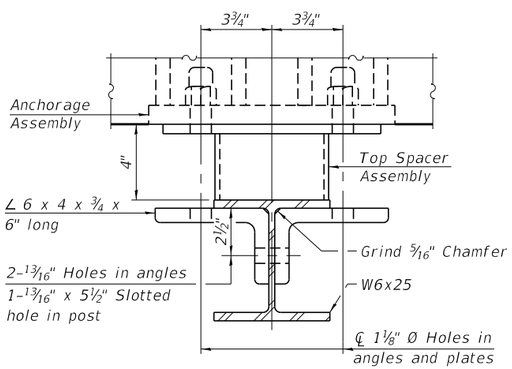

SECTION C-C

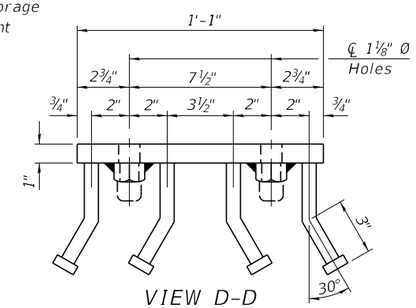

VIEW D-D

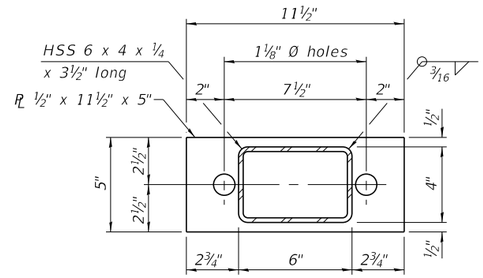

TOP SPACER ASSEMBLY

RAIL SPLICE ELEVATION

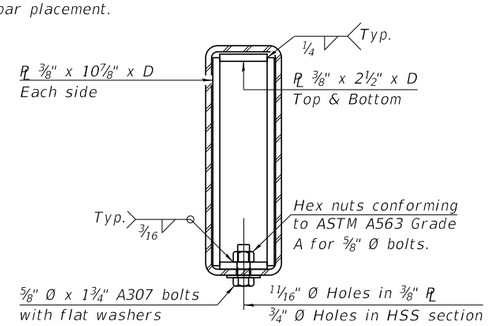

SECTION AT RAIL SPLICE

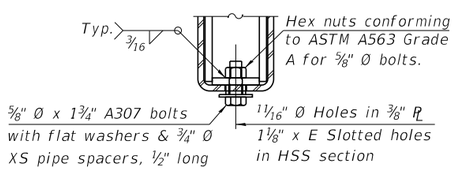

RAIL SPLICE CONNECTION AT EXPANSION JT.

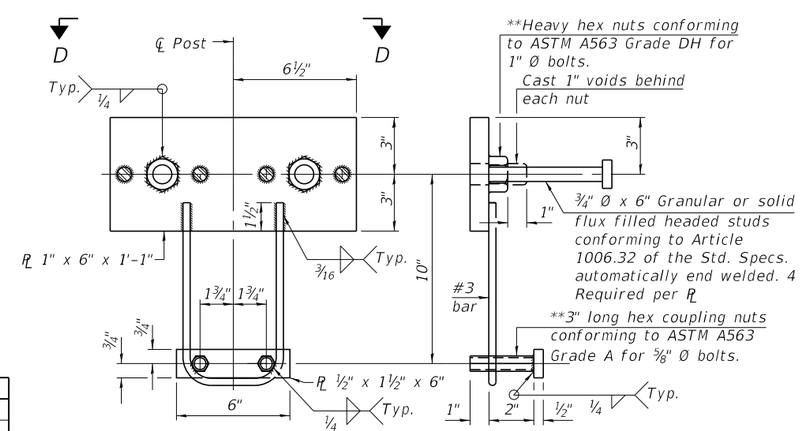

ANCHORAGE ASSEMBLY

** Threaded areas shall be plugged or blocked off during casting of concrete.

**Heavy hex nuts conforming to ASTM A563 Grade DH for 1" Ø bolts. Cast 1" voids behind each nut

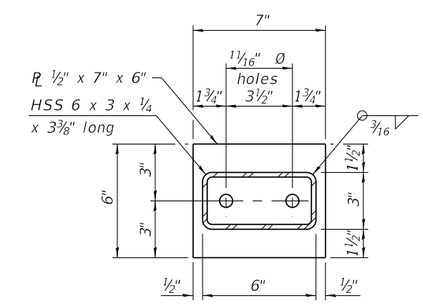

BOTTOM SPACER ASSEMBLY

RAILING CRITERIA

NCHRP 350 Test Level	2
Railing Weight (plf)	50
Max Post Spacing	10'-9"
HMA thickness range (in)	1¼ - 3⅛

SPLICE DIMENSIONS

Location	T	A	B	C	D	E
All locs. not over exp. jts.	0	¼"	4"	4"	1'-8"	-
Over Strip Seal Jt.	≤4"	2½"	4⅝"	4⅜"	1'-10"	3 1/16"
Over Finger or Modular Jt.	≤9½"	5½"	7⅜"	7¼"	2'-9¼"	5 13/16"
Over Finger or Modular Jt.	≤15"	8¼"	10⅛"	10"	3'-8¼"	8 9/16"

T = ; total movement along centerline of roadway at expansion joint.

BILL OF MATERIAL

Item	Unit	Quantity
Steel Railing, Type S-1	Foot	236
Terminal Marker - Direct Applied	Each	4

R-23A 10-12-2021

FILE NAME = 190657-shl-bridge.dgn	USER NAME =	DESIGNED - J.R.B.	REVISED -
HAMPTON, LENZINI AND RENWICK, INC. 3085 STEVENSON DRIVE, SUITE 201 SPRINGFIELD, ILLINOIS 62703		CHECKED - S.W.M.	REVISED -
ILLINOIS PROFESSIONAL DESIGN FIRM LS / PE / SE CORP. 184.000959	PLOT SCALE = $SCALE$	DRAWN - T.D.S.	REVISED -
	PLOT DATE = 3/18/2022	CHECKED - S.W.M.	REVISED -

STATE OF ILLINOIS
CHRISTIAN COUNTY HIGHWAY DEPARTMENT

STEEL RAILING, TYPE S-1
STRUCTURE NO. 011-3424

SHEET NO. 8 OF 13 SHEETS

T.R.	SECTION	COUNTY	TOTAL SHEETS	SHEET NO.
196A	19-07116-00-BR	CHRISTIAN	33	14
LOCUST ROAD DISTRICT		CONTRACT NO. 93789		
		ILLINOIS FED. AID PROJECT 9EXR(862)		

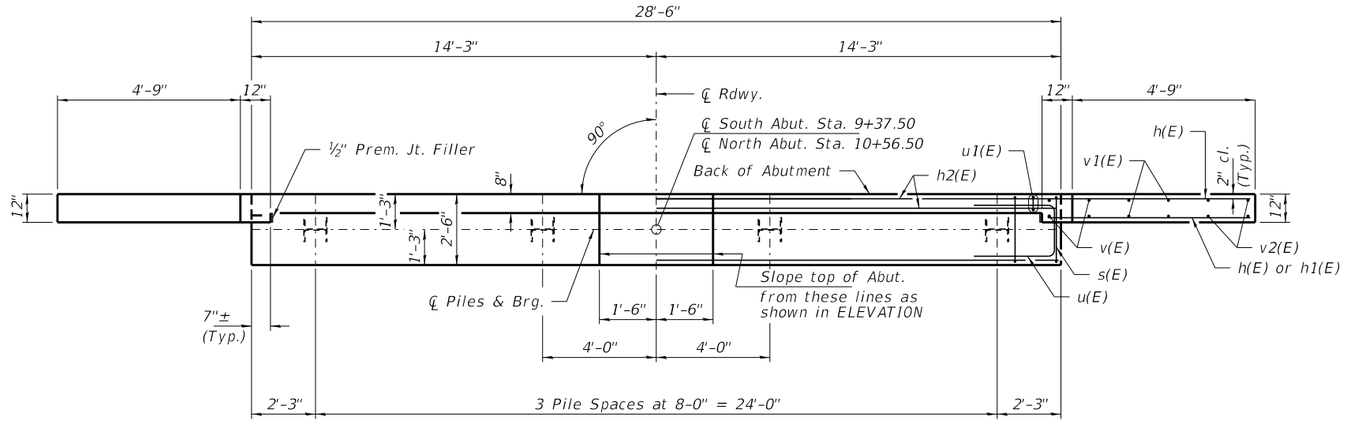

PLAN

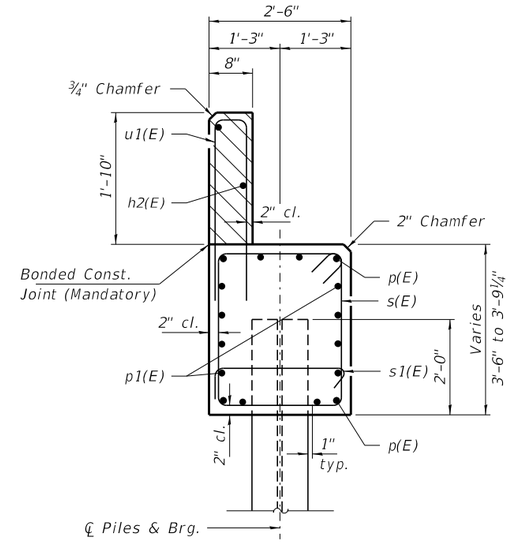

SECTION A-A

Hatched area to be poured after beams are in place.

Cast top of wingwall flush with exterior beam face after beams have been erected.

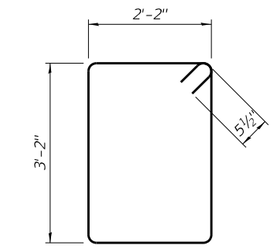

BAR s(E)

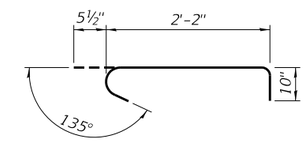

BAR s1(E)

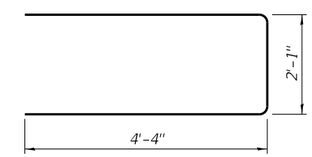

BAR u(E)

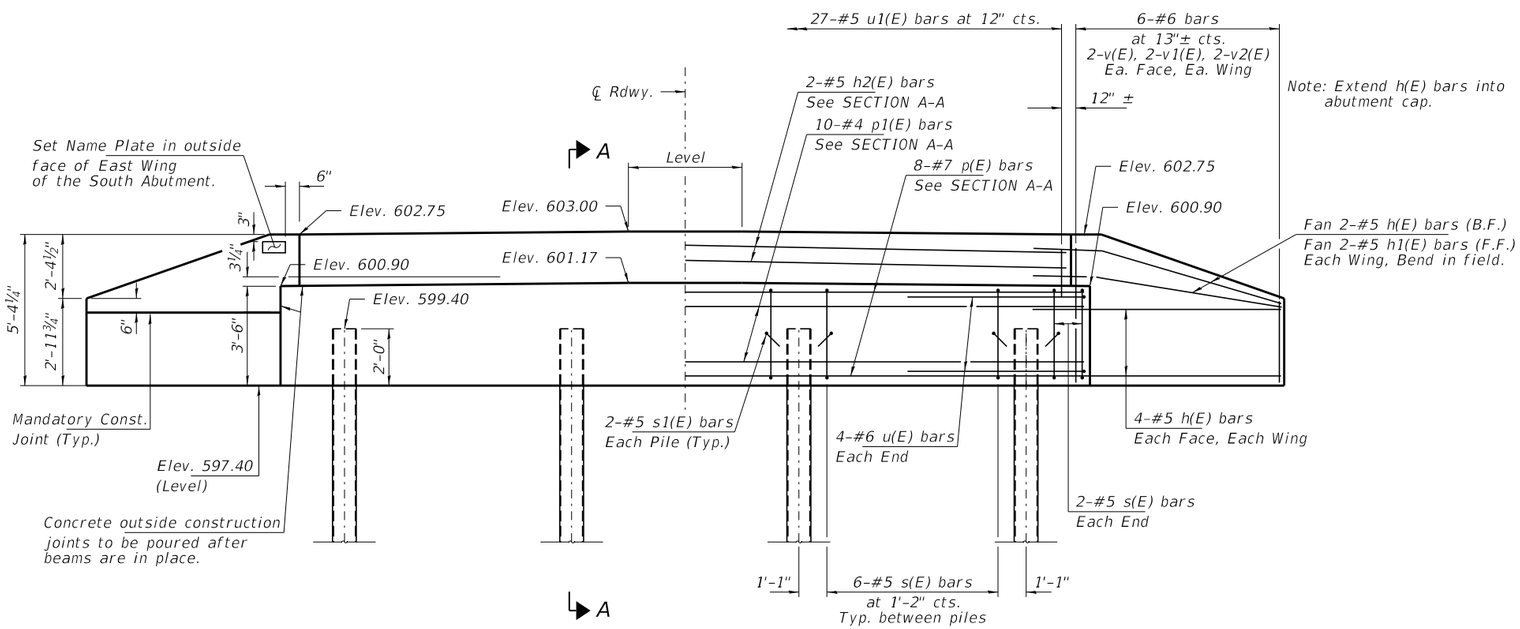

ELEVATION

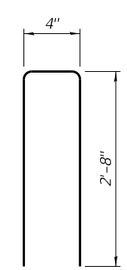

BAR u1(E)

PILE DATA

Type_____ Steel HP10x42
No. Production Piles_____ 7
No. Test Piles_____ 1
Factored Resistance Available (Rf)__ 129 Kips/Pile
Nominal Required Bearing (Rn)_____ 184 Kips/Pile
Est. Length_____ 60 Ft/Pile

Notes:
Test pile to be driven in a permanent location at the North Abutment.

The test piles shall be driven to 110 percent of the Nominal Required Bearing indicated in the pile data information.

BILL OF MATERIAL - 2 ABUTS.

BAR	NO.	SIZE	LENGTH	SHAPE
h(E)	40	#5	7'-0"	
h1(E)	8	#5	5'-6"	
h2(E)	4	#5	28'-2"	
p(E)	16	#7	28'-2"	
p1(E)	20	#4	28'-2"	
s(E)	44	#5	11'-7"	
s1(E)	16	#5	3'-6"	
u(E)	16	#6	10'-9"	
u1(E)	54	#5	5'-8"	
v(E)	16	#5	4'-11"	
v1(E)	16	#5	3'-10"	
v2(E)	16	#5	2'-9"	
Concrete Structures			Cu. Yd.	25.2
Reinf. Bars, Epoxy Coated			Pound	3,110
Furnishing Steel Piles HP10x42			Foot	420
Test Piles Steel HP10x42			Each	1
Name Plates			Each	1

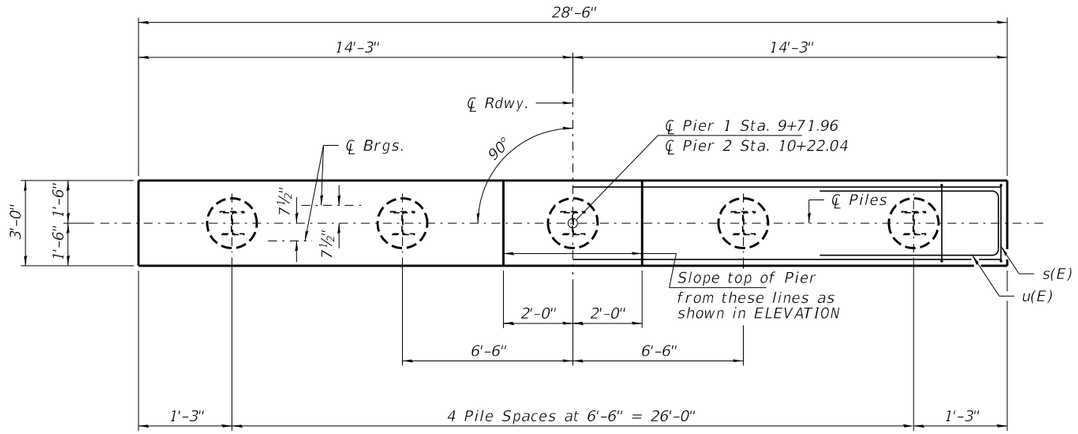

PLAN

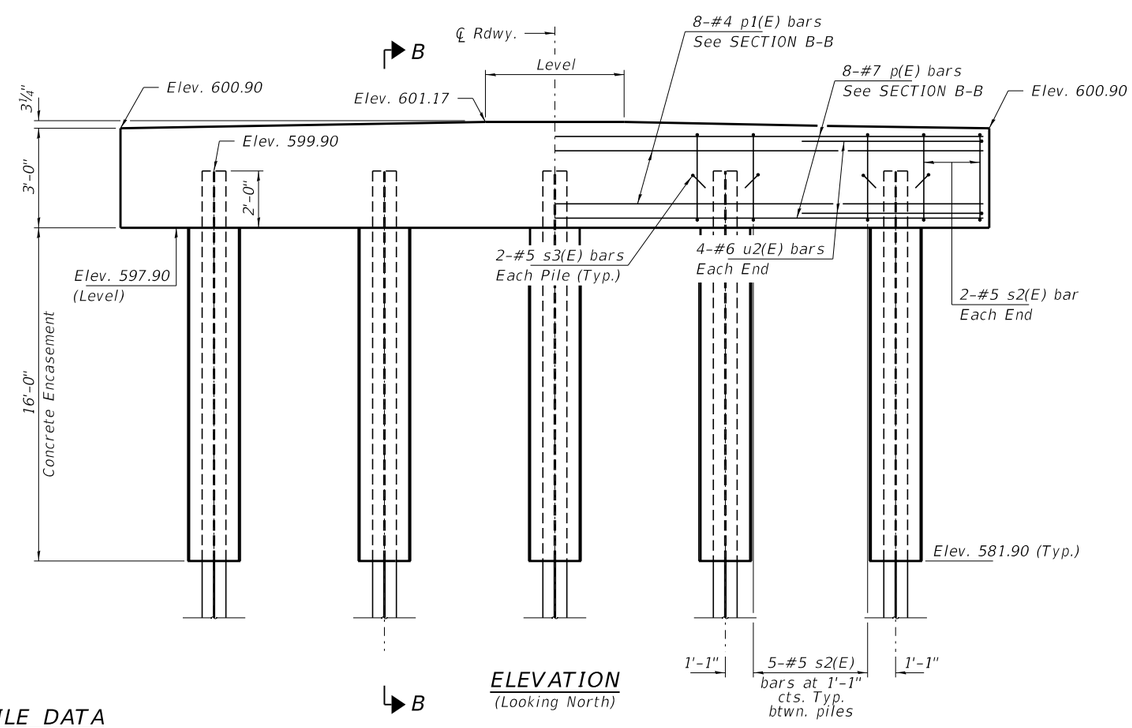

ELEVATION
(Looking North)

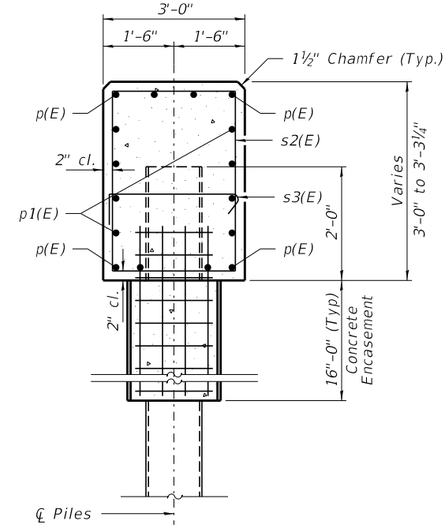

SECTION B-B

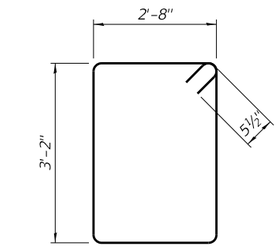

BAR s2(E)

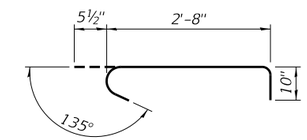

BAR s3(E)

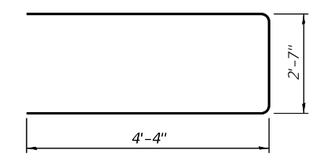

BAR u2(E)

PILE DATA

Type_____ Steel HP10x42
No. Production Piles_____ 9
No. Test Piles_____ 1
Factored Resistance Available (Rf)__ 184 Kips/Pile
Nominal Required Bearing (Rn)_____ 335 Kips/Pile
Est. Length_____ 70 Ft/Pile

Notes:
Test pile to be driven in a permanent location at Pier 1.

The test pile shall be driven to 110 percent of the Nominal Required Bearing indicated in the pile data information.

BILL OF MATERIAL - 2 PIERS

BAR	NO.	SIZE	LENGTH	SHAPE
p(E)	16	#7	28'-2"	
p1(E)	16	#4	28'-2"	
s2(E)	48	#5	12'-7"	
s3(E)	20	#5	4'-0"	
u2(E)	16	#6	11'-2"	
Cofferdam (Type 1) Loc. 1			Each	1
Cofferdam (Type 1) Loc. 2			Each	1
Concrete Structures			Cu. Yd.	20.0
Concrete Encasement			Cu. Yd.	18.2
Reinforcement Bars, Epoxy Coated			Pound	2,210
Furnishing Steel Piles HP10x42			Foot	630
Test Piles Steel HP10x42			Each	1

Note: Space top p(E) bars to miss dowel rods from PPC beams

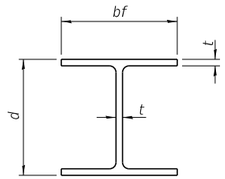

STEEL PILE TABLE

Designation	Depth d	Flange width bf	Web and Flange thickness t	Encasement diameter A
HP 14x117	14¼"	14⅞"	13/16"	30"
x102	14"	14¾"	11/16"	30"
x89	13⅞"	14¾"	⅝"	30"
x73	13⅝"	14⅝"	½"	30"
HP 12x84	12¼"	12¼"	11/16"	24"
x74	12⅛"	12¼"	⅝"	24"
x63	12"	12⅛"	½"	24"
x53	11¾"	12"	7/16"	24"
HP 10x57	10"	10¼"	9/16"	24"
x42	9¾"	10⅛"	7/16"	24"
HP 8x36	8"	8⅛"	7/16"	18"

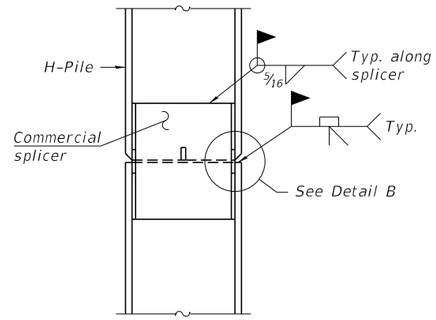

ELEVATION

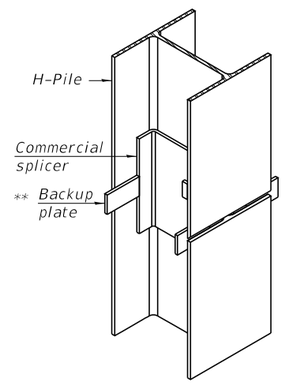

ISOMETRIC VIEW

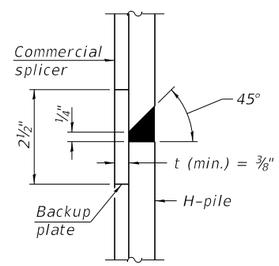

DETAIL "B"

WELDED COMMERCIAL SPLICE

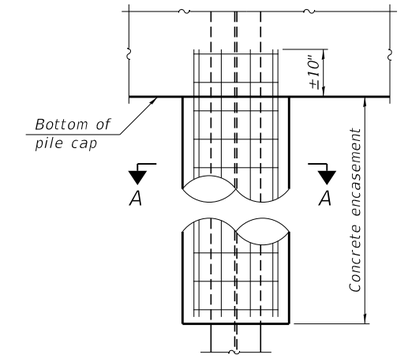

ELEVATION

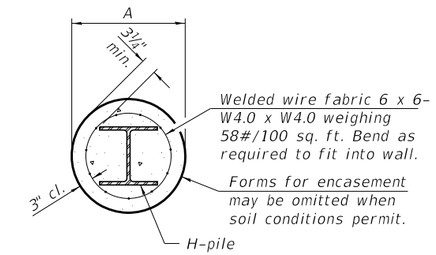

SECTION A-A

INDIVIDUAL PILE CONCRETE ENCASEMENT

(when specified)

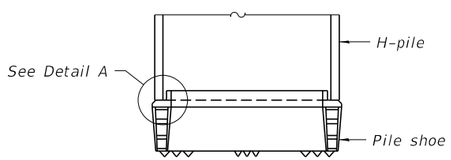

ELEVATION

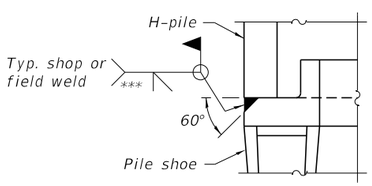

DETAIL A

SHOE ATTACHMENT

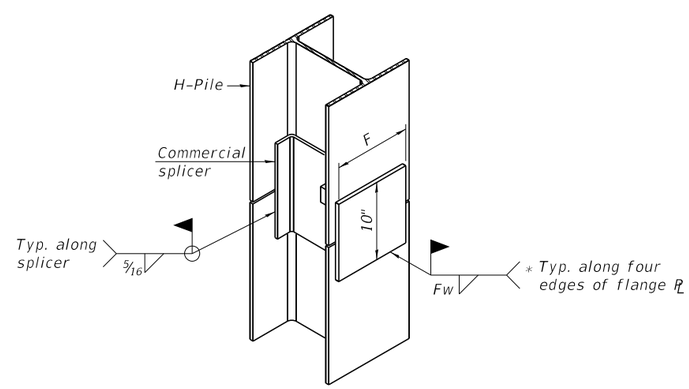

ISOMETRIC VIEW

WELDED COMMERCIAL SPLICE ALTERNATE

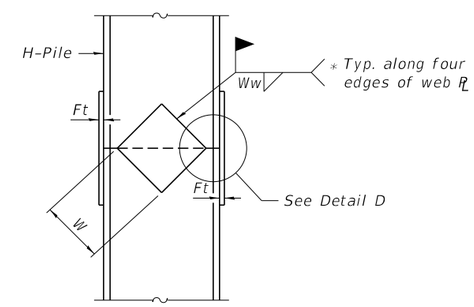

ELEVATION

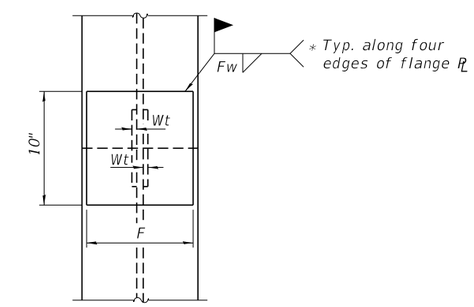

END VIEW

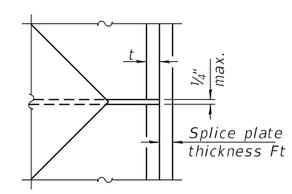

DETAIL D

Designation	F	Ft	Fw	W	Wt	Ww
HP 14x117	12½"	1"	⅞"	7¾"	⅝"	½"
x102	12½"	⅞"	¾"	7¾"	⅝"	½"
x89	12½"	¾"	11/16"	7¾"	⅝"	½"
x73	12½"	⅝"	9/16"	7¾"	⅝"	½"
HP 12x84	10"	⅞"	11/16"	6½"	⅝"	½"
x74	10"	⅞"	11/16"	6½"	⅝"	½"
x63	10"	⅝"	½"	6½"	½"	⅜"
x53	10"	⅝"	½"	6½"	½"	⅜"
HP 10x57	8"	¾"	9/16"	5¼"	½"	⅜"
x42	8"	⅝"	9/16"	5¼"	½"	⅜"
HP 8x36	7"	⅝"	7/16"	4¼"	½"	⅜"

WELDED PLATE FIELD SPLICE

Note:
The steel H-piles shall be according to AASHTO M270 Grade 50.

* Interrupt welds ¼" from end of web and/or each flange.

** Remove portions of backup plates that extend outside the flanges.

*** Weld size per pile shoe manufacturer (5/16" min.).

F-HP 1-1-2020

FILE NAME = 190657-shl-bridge.dgn	USER NAME =	DESIGNED - J.R.B.	REVISED -
HAMPTON, LENZINI AND RENWICK, INC. 3085 STEVENSON DRIVE, SUITE 201 SPRINGFIELD, ILLINOIS 62703 ILLINOIS PROFESSIONAL DESIGN FIRM LS / PE / SE CORP. 184.000959		CHECKED - S.W.M.	REVISED -
	PLOT SCALE = $SCALE$	DRAWN - T.D.S.	REVISED -
	PLOT DATE = 3/18/2022	CHECKED - S.W.M.	REVISED -

STATE OF ILLINOIS
CHRISTIAN COUNTY HIGHWAY DEPARTMENT

HP PILE DETAILS
STRUCTURE NO. 011-3424

SHEET NO. 11 OF 13 SHEETS

T.R.	SECTION	COUNTY	TOTAL SHEETS	SHEET NO.
196A	19-07116-00-BR	CHRISTIAN	33	17
LOCUST ROAD DISTRICT		CONTRACT NO. 93789		
		ILLINOIS	FED. AID PROJECT 9EXR(862)	

FOUNDATION BORING LOG

BORING NO.: 1
COORDINATES: 13 ft. N. of N. Abutment, 15 ft. E. of Centerline
SURFACE ELEV.: 99.1 ft. 599.0

GROUNDWATER ELEV.
COMP.: - -
AFTER 3 DAYS.: -9.6 ft.;
Bridge at -31.0 ft.

Description	Elev. / Depth	N Value	Qu (tsf)	W (%)	REC (%)
SILTY CLAY (CL), Brown, Moist, Medium Stiff	0				
			P		
		7	2.75	19.6	65
			P		
	5	5	2.25	22.8	65
Gray, Brown, Mottled, Stiff			P		
		9	3.75	21.1	90
	505.9 90.6 ft.				
SILTY CLAY LOAM (CL), Dark Gray, Moist, Medium Stiff			P		
	10	7	3.25	29.5	75
	588.0 88.1 ft.				
SILTY LOAM (ML), Gray, Moist to Wet, Medium Stiff			P		
		4	0.75	30.2	100
	585.5 85.6 ft.				
SILTY CLAY LOAM (CL), Gray, Moist to Wet, Medium Stiff			P		
	15	5	1.25	26.2	100
	583.0 83.1 ft.				
SILTY CLAY (CL), Light Gray, Brown, Mottled, Moist, Medium Stiff			P		
		6	2.25	25.9	100
			P		
	20	5	1.5	28.0	100

Description	Elev. / Depth	N Value	Qu (tsf)	W (%)	REC (%)
	20				
	578.0 78.1 ft.				
SILTY CLAY LOAM (CL), Light Gray, Brown, Mottled, Moist to Wet, Soft			P		
		3	0.5	33.9	100
	575.5 75.6 ft.				
SILT (ML), Gray, Wet, Soft			P		
	574.5 74.6 ft.				
SANDY LOAM (SP), Gray, Saturated, Very Fine	25	3	0.5	26.2	100
	573.0 73.1 ft.				
SAND (SP), Brown, Saturated, Fine, Medium Dense					
		12	NP	--	100
	570.5 70.6 ft.				
SILT (ML), Gray, Wet, Medium Stiff			P		
	569.0 69.1 ft. 30	4	0.5	25.5	100
SAND (SP), Gray, Saturated, Medium Dense, Fine					
	564.0 64.1 ft. 35	11	NP	--	100
SILT (ML), Gray, Dry to Moist, Soft					
Moist			P		
	40	4	0.5	27.5	65

FOUNDATION BORING LOG

BORING NO.: 1 (Continued)
COORDINATES: 13 ft. N. of N. Abutment, 15 ft. E. of Centerline
SURFACE ELEV.: 99.1 ft. 599.0

GROUNDWATER ELEV.
COMP.: - -
AFTER 3 DAYS.: -9.6 ft.;
Bridge at -31.0 ft.

Description	Elev. / Depth	N Value	Qu (tsf)	W (%)	REC (%)
SILT (ML), Gray, Moist, Soft	40				
	557.0 57.1 ft.				
GRAVEL with Sand, Saturated, Medium Dense					
	555.5 55.6 ft.	28	NP	--	40
SILTY LOAM TILL (ML), Gray, Dry to Moist, Very Stiff					
	45				
			P		
		21	>4.5	19.5	65
	550.5 50.6 ft.				
CLAY TILL (CL), Gray, Brown, Mottled, Moist, Trace of Sand			P		
	50	17	3.5	25.1	100
Hard			P		
	55	64	>4.5	21.5	100
	540.5 40.6 ft.				
SILTY CLAY (CL), Gray, Brown, Moist, Very Stiff, No Sand or Gravel			P		
	60	16	3.5	26.7	100

Description	Elev. / Depth	N Value	Qu (tsf)	W (%)	REC (%)
	60				
	535.5 35.6 ft.				
SILTY CLAY LOAM TILL (CL), Gray and Brown, Moist, Very Stiff, Trace of Gravel			P		
	534.5 34.6 ft.				
WEATHERED SHALE, Gray and Brown, Moist, Very Stiff, Slightly Fissile	65	25	>4.5	20.4	100
	530.0 30.1 ft.				
SHALE, Gray, Moist, Dry, Highly Fissile	70	100/2"	NP	25.1	100
	524.5 24.6 ft.	100/12"	NP	13.1	100
End of Exploration at -74.5 ft.	75				
NOTES: 1) Borehole backfilled with soil cuttings upon final groundwater measurement. 2) Drilling fluid introduced to borehole during drilling activities. 3) Boring elevation determined utilizing a local benchmark (painted "x" on northeast wingwall) set to an elevation of 100.0 ft.	80				
	599.9				

BORING-1

FILE NAME = 190657-sht-bridge.dgn	USER NAME =	DESIGNED - J.R.B.	REVISED -	STATE OF ILLINOIS CHRISTIAN COUNTY HIGHWAY DEPARTMENT	BORINGS STRUCTURE NO. 011-3424	T.R.	SECTION	COUNTY	TOTAL SHEETS	SHEET NO.
HAMPTON, LENZINI AND RENWICK, INC. 3085 STEVENSON DRIVE, SUITE 201 SPRINGFIELD, ILLINOIS 62703		CHECKED - S.W.M.	REVISED -			196A	19-07116-00-BR	CHRISTIAN	33	18
ILLINOIS PROFESSIONAL DESIGN FIRM LS / PE / SE CORP. 184.000959	PLOT SCALE = $SCALE$	DRAWN - T.D.S.	REVISED -			LOCUST ROAD DISTRICT		CONTRACT NO. 93789		
	PLOT DATE = 3/18/2022	CHECKED - S.W.M.	REVISED -		SHEET NO. 12 OF 13 SHEETS		ILLINOIS	FED. AID PROJECT 9EXR(862)		

FOUNDATION BORING LOG

BORING NO.: 2
COORDINATES: 14 ft. S. of S. Abutment, 9 ft. W. of Centerline
SURFACE ELEV.: 99.8 ft. 599.7

GROUNDWATER ELEV.
COMP.: - -
AFTER 2 DAYS: -6.1 ft.;
Bridge at -26.3 ft.

Description	Elev.	Depth	N Value	Qu (tsf)	W (%)	REC (%)
SILTY CLAY (CL), Brown, Moist, Medium Stiff		0				
				P		
			7	2.25	17.7	60
				P		
		5	5	1.5	22.2	50
SILTY CLAY LOAM (CL), Dark Gray, Moist, Stiff, Trace of Wood	593.7	93.8 ft		P		
			8	3.5	23.2	75
Dark Gray, Dry to Moist, Medium Stiff				P		
		10	7	4.0	24.4	95
Moist				P		
			5	2.0	27.7	95
SILTY LOAM (ML), Dark Gray, Moist, Medium Stiff	586.2	86.3 ft.		P		
		15	5	1.25	28.9	100
SILTY CLAY (CL), Dark Gray, Moist, Medium Stiff	583.7	83.8 ft.		P		
			5	2.0	24.0	100
SILTY CLAY LOAM (CL), Gray, Brown, Mottled, Moist, Soft	571.2	81.3 ft.		P		
		20	2	1.0	22.0	100

Description	Elev.	Depth	N Value	Qu (tsf)	W (%)	REC (%)
		20				
SILTY LOAM (ML), Dark Gray, Wet, Very Soft, Few Sand	578.7	78.8 ft.		P		
			1	0.25	26.2	100
Soft 6" Fine Sand Layer				P		
		25	3	0.25	28.2	100
SAND (SP), Gray, Saturated, Loose, Very Fine, Trace of Wood, Few Fines	573.7	73.8 ft.				
			4	NP	--	100
Few Gravel		30	10	NP	--	100
SILT (ML), Gray, Moist, Stiff	566.2	66.3 ft.		P		
		35	9	2.75	24.6	100
Medium Stiff		40	7	1.25	23.7	100

FOUNDATION BORING LOG

BORING NO.: 2 (Continued)
COORDINATES: 14 ft. S. of S. Abutment, 9 ft. W. of Centerline
SURFACE ELEV.: 99.8 ft. 599.7

GROUNDWATER ELEV.
COMP.: - -
AFTER 2 DAYS: -6.1 ft.;
Bridge at -26.3 ft.

Description	Elev.	Depth	N Value	Qu (tsf)	W (%)	REC (%)
		40				
SILT (ML), Gray, Moist, Medium Stiff	556.2	56.3 ft.		P		
SILTY LOAM TILL (ML), Gray, Moist, Very Stiff						
6" Seam of Sand and Gravel		45	26	2.75	22.9	100
CLAY TILL (CL), Brown, Moist, Very Stiff, Trace of Gravel	551.2	51.3 ft.		P		
		50	16	4.5	22.1	100
Gray and Olive, Hard				P		
		55	30	>4.5	22.1	100
SILTY CLAY (CL), Gray and Brown, Moist, Very Stiff, No Sand or Gravel	542.2	42.3 ft.		P		
		60	16	>4.5	26.2	100

Description	Elev.	Depth	N Value	Qu (tsf)	W (%)	REC (%)
		60				
WEATHERED SHALE, Gray and Brown, Dry to Moist, Very Stiff, Slightly Fissile	536.2	36.3 ft.		P		
		65	21	>4.5	27.4	90
SHALE, Gray, Dry, Hard, Highly Fissile	531.2	31.3 ft.				
	529.7	29.8 ft. 70	100/14"	NP	16.4	100
End of Exploration at -69.7 ft.						
NOTES: 1) Borehole backfilled with soil cuttings upon final groundwater measurement. 2) Drilling fluid introduced to borehole during drilling activities. 3) Boring elevation determined utilizing a local benchmark (painted "x" on northeast wingwall) set to an elevation of 100.0 ft. 599.9		75				
		80				

BORING-2

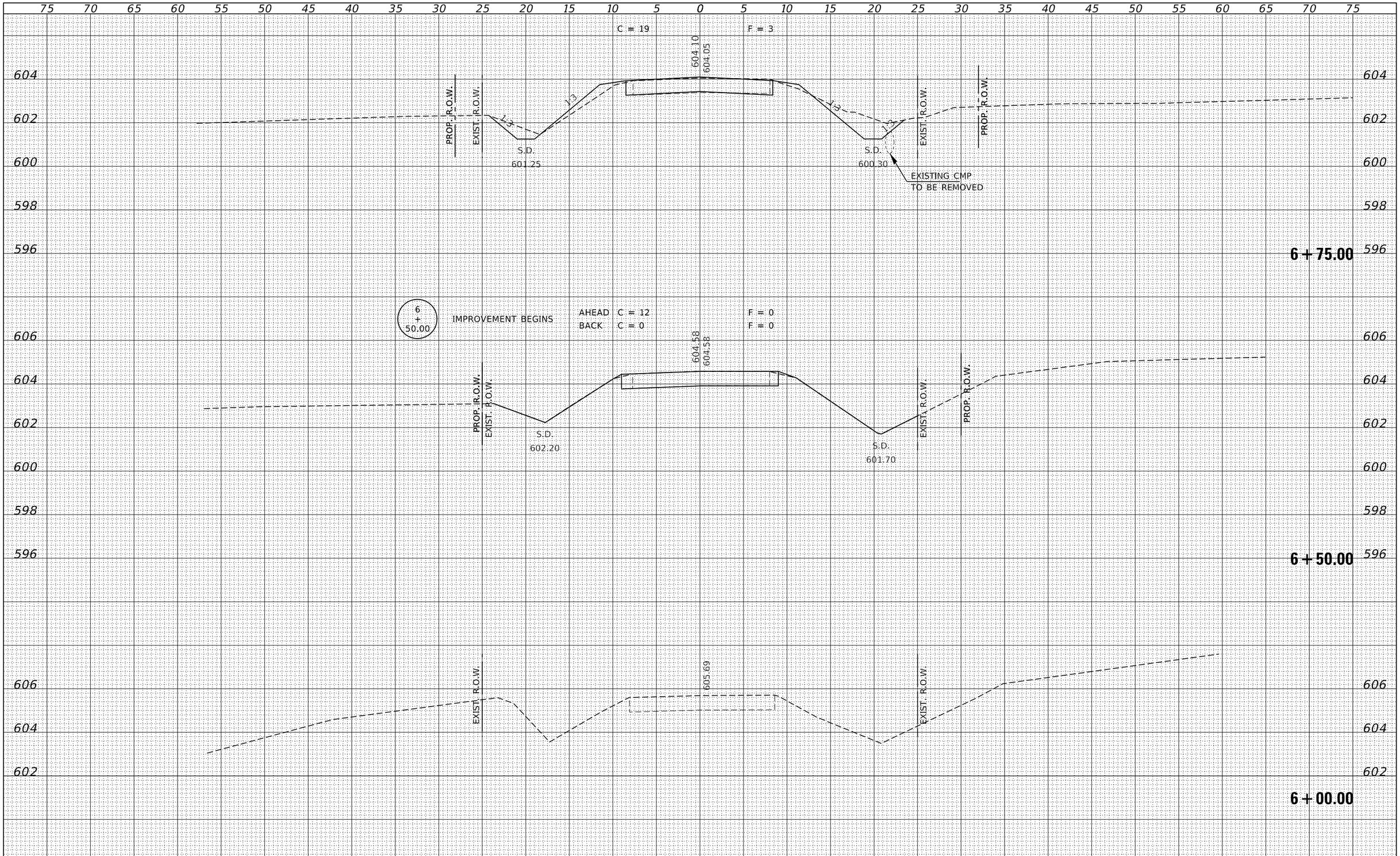

FINAL SURVEY					
NOTE BOOK	SURVEYED				
	PLOTTED				
	TEMPLATE				
	AREAS				
	AREAS CHECKED				
NO.		BY		DATE	

ORIGINAL SURVEY					
NOTE BOOK	SURVEYED				
	PLOTTED				
	TEMPLATE				
	AREAS				
	AREAS CHECKED				
NO.		BY		DATE	

FILE NAME = 190657-sht-xssheets.dgn	USER NAME =	DESIGNED - S.A.A.	REVISED -
HAMPTON, LENZINI AND RENWICK, INC. 3085 STEVENSON DRIVE, SUITE 201 SPRINGFIELD, ILLINOIS 62703 ILLINOIS PROFESSIONAL DESIGN FIRM LS / PE / SE CORP. 184.000959		DRAWN - T.W.K.	REVISED -
	PLOT SCALE = $SCALE$	CHECKED - J.W.F.	REVISED -
	PLOT DATE = 3/18/2022	DATE - 03/18/2022	REVISED -

STATE OF ILLINOIS
CHRISTIAN COUNTY HIGHWAY DEPARTMENT

STATION CROSS SECTIONS

SCALE: 5H:2V | SHEET NO. 1 OF 14 SHEETS | STA. 6+00.00 TO STA. 6+75.00

T.R.	SECTION	COUNTY	TOTAL SHEETS	SHEET NO.
196A	19-07116-00-BR	CHRISTIAN	33	20
LOCUST ROAD DISTRICT		CONTRACT NO.		
		ILLINOIS	FED. AID PROJECT	

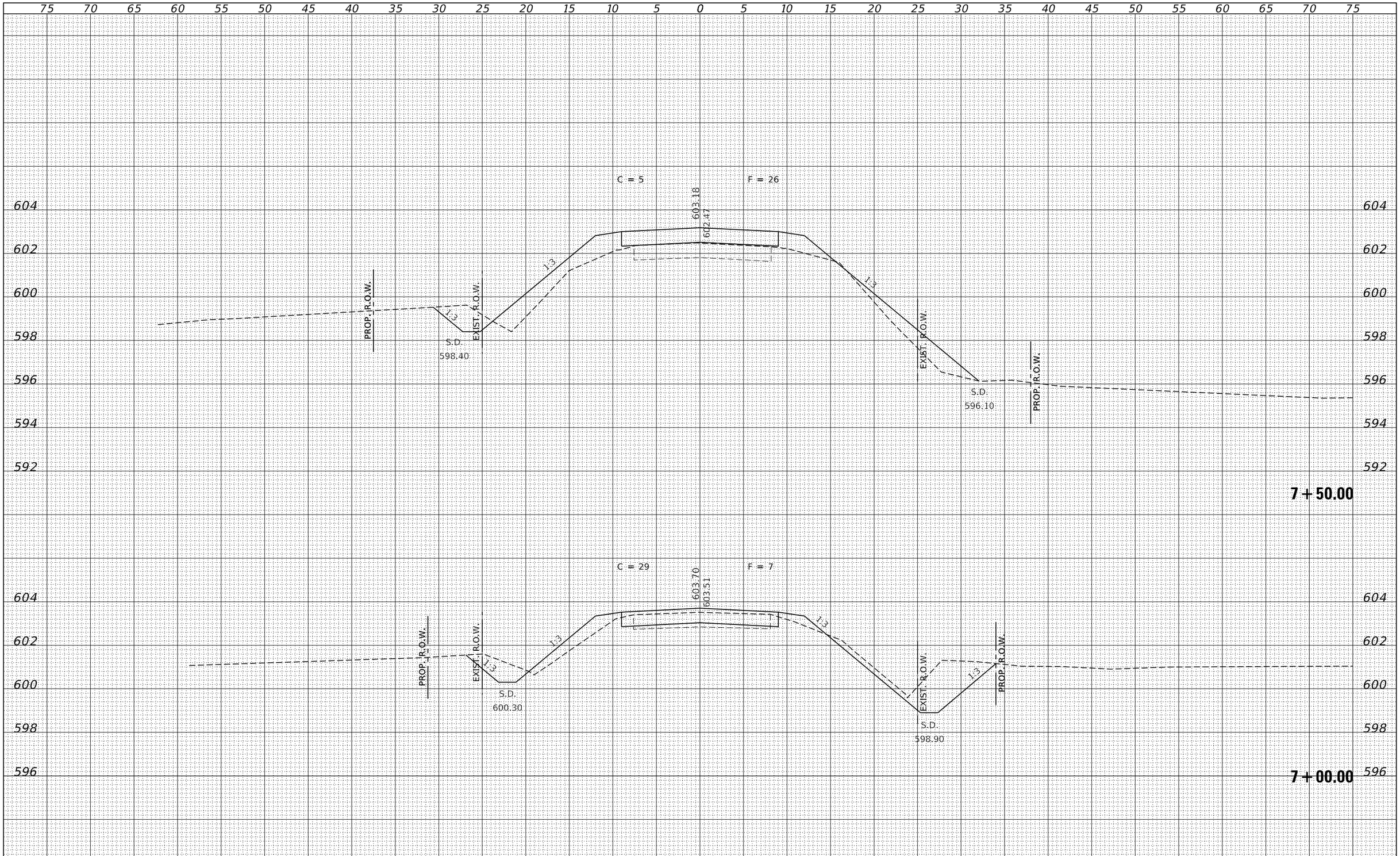

FINAL SURVEY		BY	DATE
NOTE BOOK	SURVEYED		
	PLOTTED		
	TEMPLATE		
	AREAS		
	AREAS CHECKED		
NO.			

ORIGINAL SURVEY		BY	DATE
NOTE BOOK	SURVEYED		
	PLOTTED		
	TEMPLATE		
	AREAS		
	AREAS CHECKED		
NO.			

FILE NAME = 190657-sht-xssheets.dgn	USER NAME =	DESIGNED - S.A.A.	REVISED -
HAMPTON, LENZINI AND RENWICK, INC. 3085 STEVENSON DRIVE, SUITE 201 SPRINGFIELD, ILLINOIS 62703 ILLINOIS PROFESSIONAL DESIGN FIRM LS / PE / SE CORP. 184.000959		DRAWN - T.W.K.	REVISED -
	PLOT SCALE = $SCALE$	CHECKED - J.W.F.	REVISED -
	PLOT DATE = 3/18/2022	DATE - 03/18/2022	REVISED -

STATE OF ILLINOIS
CHRISTIAN COUNTY HIGHWAY DEPARTMENT

STATION CROSS SECTIONS

SCALE: 5H:2V | SHEET NO. 2 OF 14 SHEETS | STA. 7+00.00 TO STA. 7+50.00

T.R.	SECTION	COUNTY	TOTAL SHEETS	SHEET NO.
196A	19-07116-00-BR	CHRISTIAN	33	21
LOCUST ROAD DISTRICT		CONTRACT NO.		
		ILLINOIS FED. AID PROJECT		

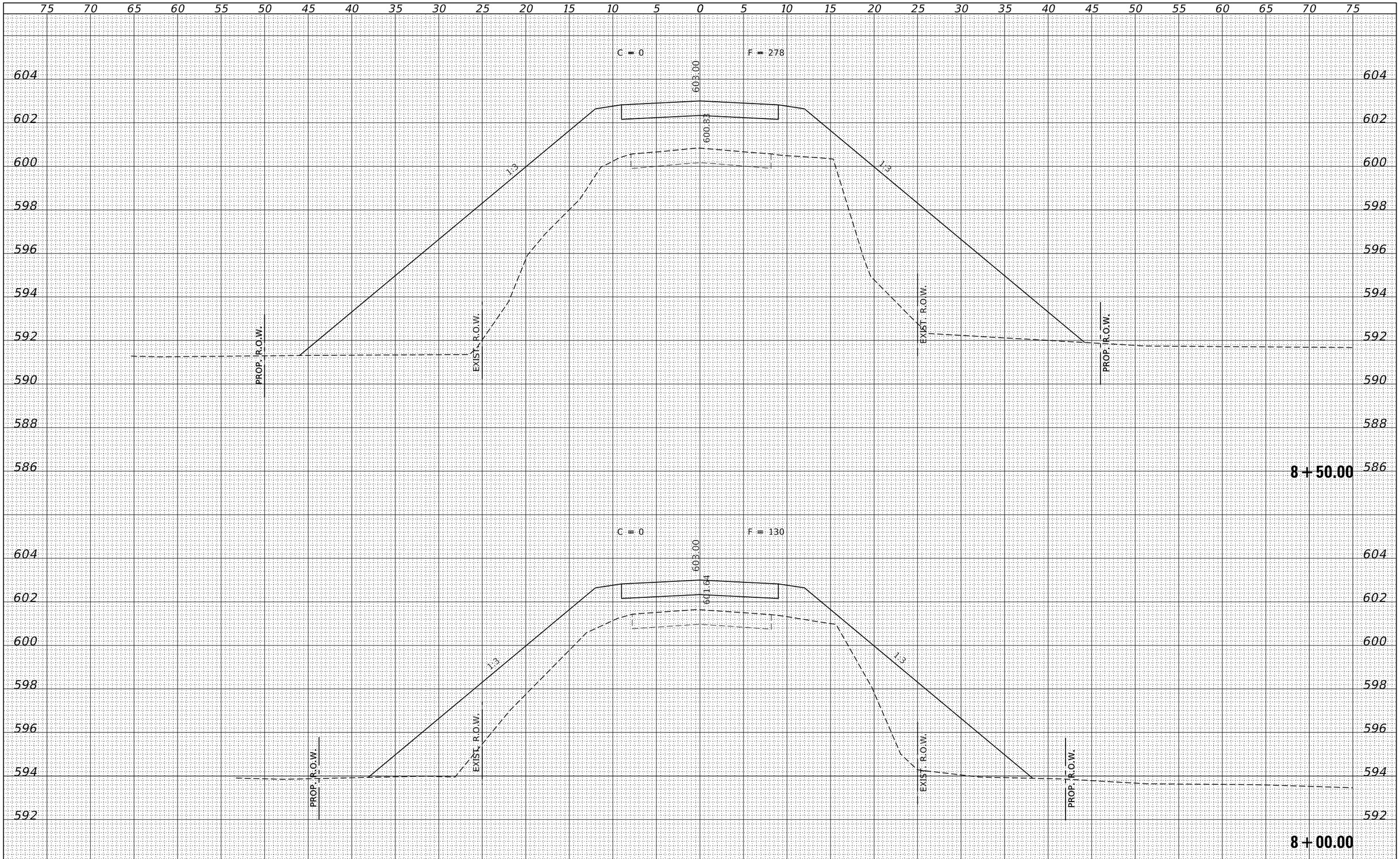

ORIGINAL SURVEY		BY	DATE
NOTE BOOK	SURVEYED		
	PLOTTED		
	TEMPLATE		
	AREAS		
NO.	AREAS CHECKED		

FINAL SURVEY		BY	DATE
NOTE BOOK	SURVEYED		
	PLOTTED		
	TEMPLATE		
	AREAS		
NO.	AREAS CHECKED		

FILE NAME = 190657-sht-xssheets.dgn

USER NAME =

PLOT SCALE = $SCALE$

PLOT DATE = 3/18/2022

DESIGNED - S.A.A.
DRAWN - T.W.K.
CHECKED - J.W.F.
DATE - 03/18/2022

REVISED -
REVISED -
REVISED -
REVISED -

HAMPTON, LENZINI AND RENWICK, INC.
3085 STEVENSON DRIVE, SUITE 201
SPRINGFIELD, ILLINOIS 62703
ILLINOIS PROFESSIONAL DESIGN FIRM
LS / PE / SE CORP. 184.000959

STATE OF ILLINOIS
CHRISTIAN COUNTY HIGHWAY DEPARTMENT

STATION CROSS SECTIONS

SCALE: 5H:2V | SHEET NO. 3 OF 14 SHEETS | STA. 8+00.00 TO STA. 8+50.00

T.R.	SECTION	COUNTY	TOTAL SHEETS	SHEET NO.
196A	19-07116-00-BR	CHRISTIAN	33	22
LOCUST ROAD DISTRICT		CONTRACT NO.		
		ILLINOIS	FED. AID PROJECT	

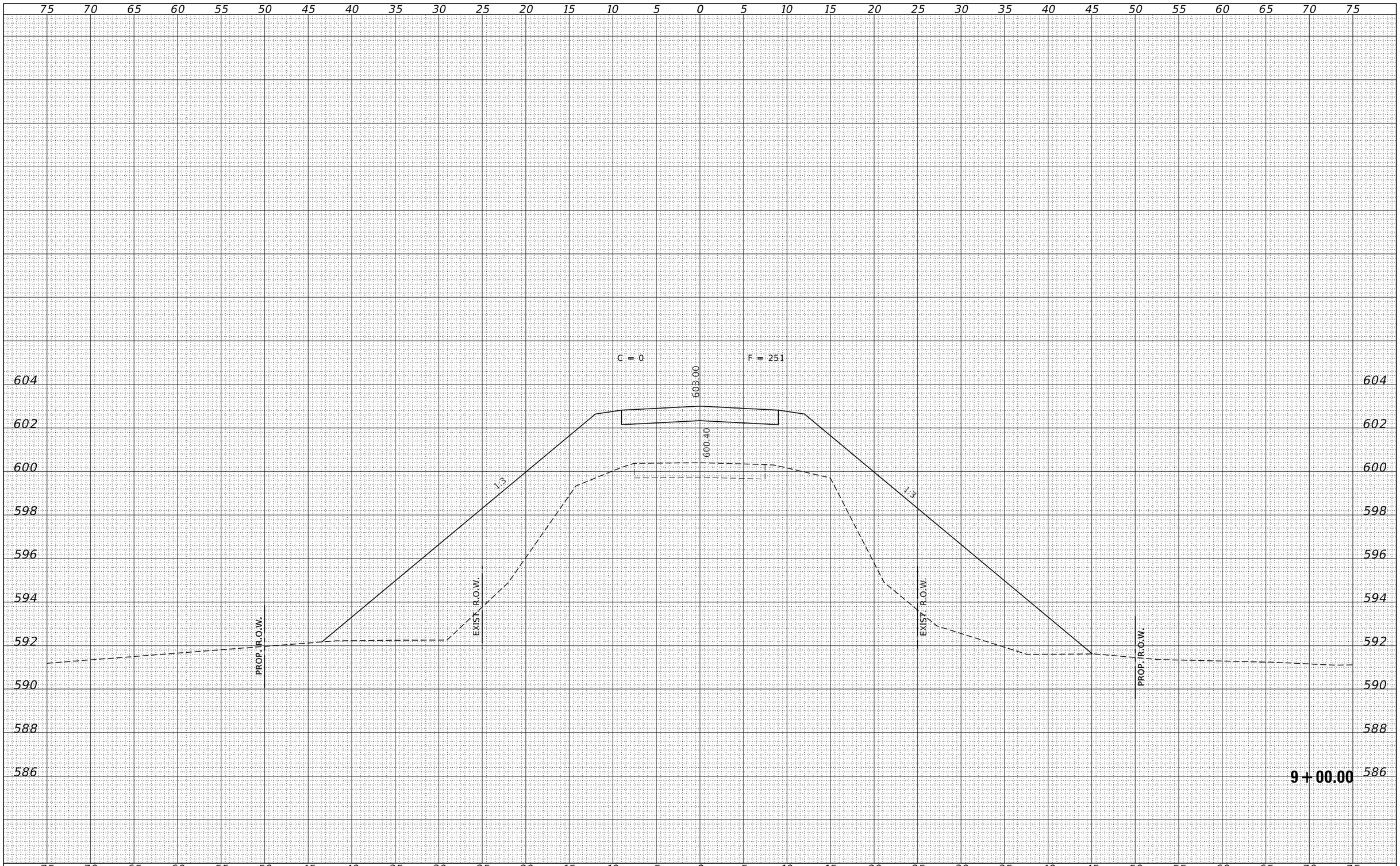

FINAL SURVEY		BY	DATE
NOTE BOOK	SURVEYED		
	PLOTTED		
	TEMPLATE		
	AREAS		
NO.	AREAS CHECKED		

ORIGINAL SURVEY		BY	DATE
NOTE BOOK	SURVEYED		
	PLOTTED		
	TEMPLATE		
	AREAS		
NO.	AREAS CHECKED		

FILE NAME = 190657-sht-xssheets.dgn

USER NAME =

PLOT SCALE = $SCALE$

PLOT DATE = 3/18/2022

DESIGNED - S.A.A.
DRAWN - T.W.K.
CHECKED - J.W.F.
DATE - 03/18/2022

REVISED -
REVISED -
REVISED -
REVISED -

HAMPTON, LENZINI AND RENWICK, INC.
3085 STEVENSON DRIVE, SUITE 201
SPRINGFIELD, ILLINOIS 62703
ILLINOIS PROFESSIONAL DESIGN FIRM
LS / PE / SE CORP. 184.000959

STATE OF ILLINOIS
CHRISTIAN COUNTY HIGHWAY DEPARTMENT

STATION CROSS SECTIONS

SCALE: 5H:2V | SHEET NO. 4 OF 14 SHEETS | STA. 9+00.00 TO STA. 9+00.00

T.R.	SECTION	COUNTY	TOTAL SHEETS	SHEET NO.
196A	19-07116-00-BR	CHRISTIAN	33	23
LOCUST ROAD DISTRICT		CONTRACT NO.		
		ILLINOIS	FED. AID PROJECT	

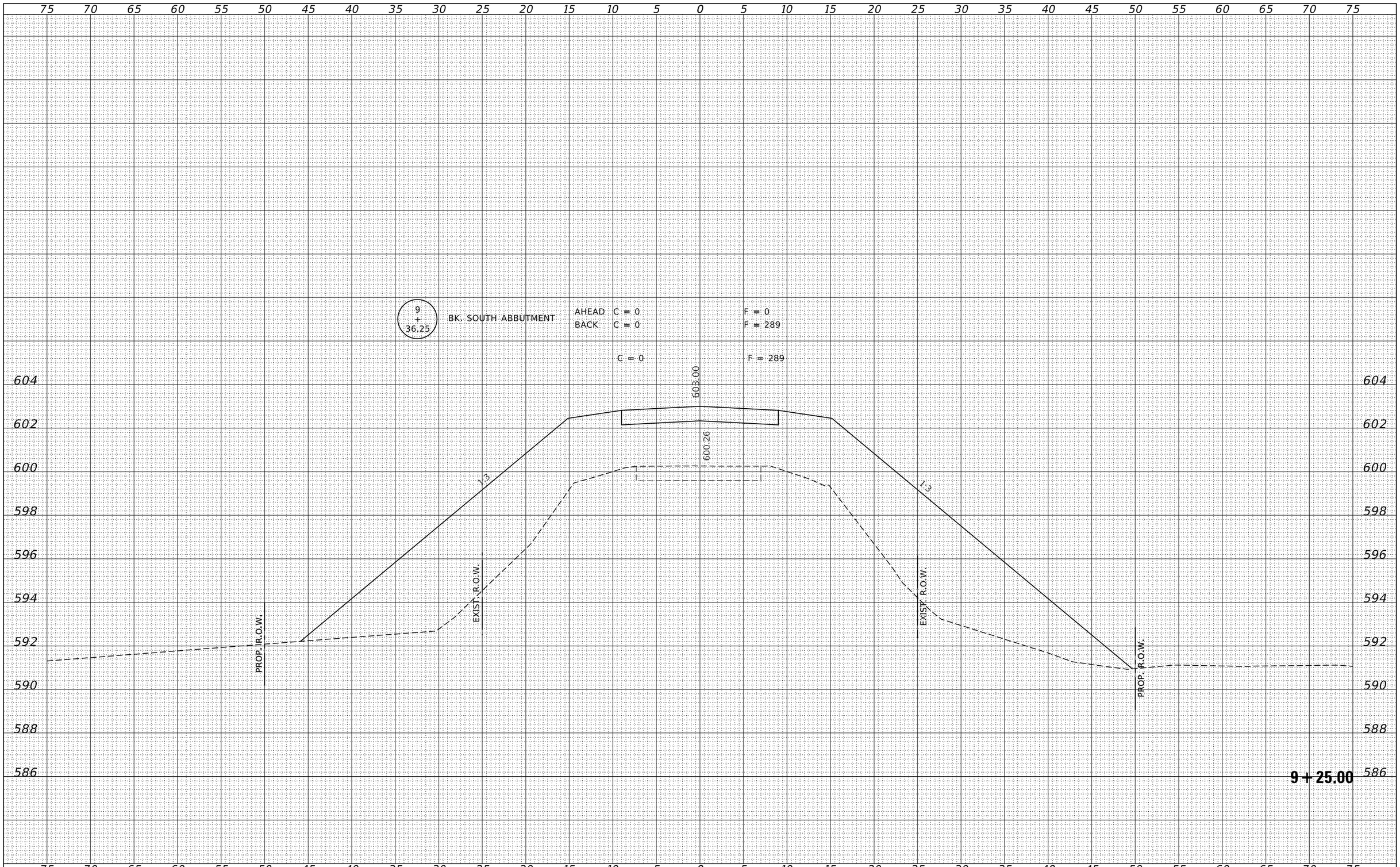

FINAL SURVEY		BY	DATE
NOTE BOOK	SURVEYED		
	PLOTTED		
	TEMPLATE		
	AREAS		
NO.	AREAS CHECKED		

ORIGINAL SURVEY		BY	DATE
NOTE BOOK	SURVEYED		
	PLOTTED		
	TEMPLATE		
	AREAS		
NO.	AREAS CHECKED		

FILE NAME = 190657-sht-xssheets.dgn

USER NAME =

PLOT SCALE = $SCALE$

PLOT DATE = 3/18/2022

DESIGNED - S.A.A.
DRAWN - T.W.K.
CHECKED - J.W.F.
DATE - 03/18/2022

REVISED -
REVISED -
REVISED -
REVISED -

HAMPTON, LENZINI AND RENWICK, INC.
3085 STEVENSON DRIVE, SUITE 201
SPRINGFIELD, ILLINOIS 62703
ILLINOIS PROFESSIONAL DESIGN FIRM
LS / PE / SE CORP. 184.000959

STATE OF ILLINOIS
CHRISTIAN COUNTY HIGHWAY DEPARTMENT

STATION CROSS SECTIONS

SCALE: 5H:2V | SHEET NO. 5 OF 14 SHEETS | STA. 9+25.00 TO STA. 9+25.00

T.R.	SECTION	COUNTY	TOTAL SHEETS	SHEET NO.
196A	19-07116-00-BR	CHRISTIAN	33	24
LOCUST ROAD DISTRICT		CONTRACT NO.		
		ILLINOIS	FED. AID PROJECT	

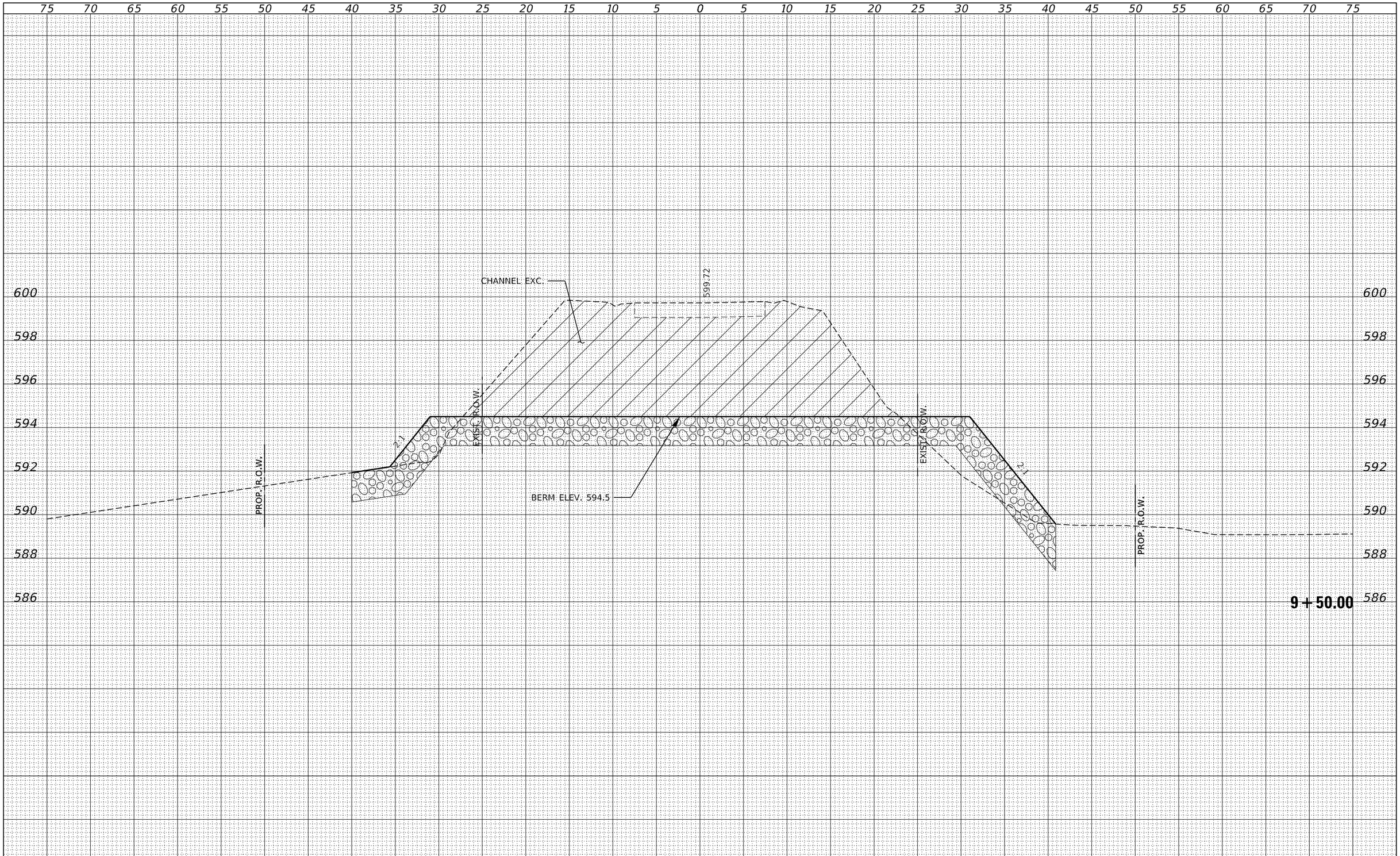

FINAL SURVEY		BY	DATE
NOTE BOOK	SURVEYED		
	PLOTTED		
	TEMPLATE		
	AREAS		
NO.	AREAS CHECKED		

ORIGINAL SURVEY		BY	DATE
NOTE BOOK	SURVEYED		
	PLOTTED		
	TEMPLATE		
	AREAS		
NO.	AREAS CHECKED		

FILE NAME = 190657-sht-xssheets.dgn

USER NAME =

PLOT SCALE = $SCALE$

PLOT DATE = 3/18/2022

DESIGNED - S.A.A.
DRAWN - T.W.K.
CHECKED - J.W.F.
DATE - 03/18/2022

REVISED -
REVISED -
REVISED -
REVISED -

HAMPTON, LENZINI AND RENWICK, INC.
5005 STEVENSON DRIVE, SUITE 201
SPRINGFIELD, ILLINOIS 62703
ILLINOIS PROFESSIONAL DESIGN FIRM
LS / PE / SE CORP. 184.000969

STATE OF ILLINOIS
CHRISTIAN COUNTY HIGHWAY DEPARTMENT

STATION CROSS SECTIONS

SCALE: 5H:2V | SHEET NO. 6 OF 14 SHEETS | STA. 9+50.00 TO STA. 9+75.00

T.R.	SECTION	COUNTY	TOTAL SHEETS	SHEET NO.
196A	19-07116-00-BR	CHRISTIAN	33	25
LOCUST ROAD DISTRICT		CONTRACT NO.		
		ILLINOIS FED. AID PROJECT		

FINAL SURVEY		BY	DATE
NOTE BOOK	SURVEYED		
	PLOTTED		
	TEMPLATE		
	AREAS		
	AREAS CHECKED		
NO.			

ORIGINAL SURVEY		BY	DATE
NOTE BOOK	SURVEYED		
	PLOTTED		
	TEMPLATE		
	AREAS		
	AREAS CHECKED		
NO.			

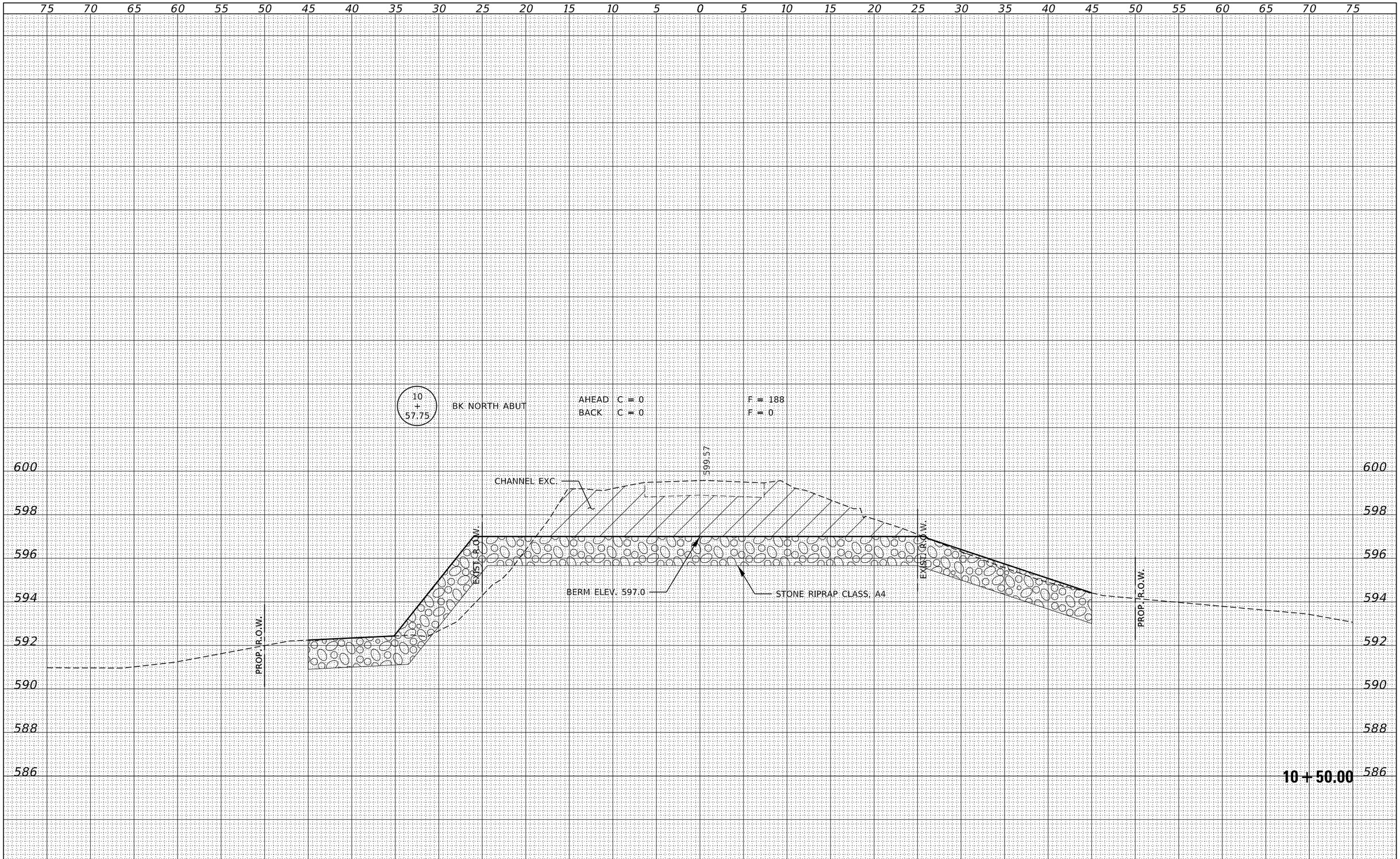

FILE NAME = 190657-sht-xssheets.dgn	USER NAME =	DESIGNED - S.A.A.	REVISED -
HAMPTON, LENZINI AND RENWICK, INC. 3085 STEVENSON DRIVE, SUITE 201 SPRINGFIELD, ILLINOIS 62703		DRAWN - T.W.K.	REVISED -
ILLINOIS PROFESSIONAL DESIGN FIRM LS / PE / SE CORP. 184.000959	PLOT SCALE = $SCALE$	CHECKED - J.W.F.	REVISED -
	PLOT DATE = 3/18/2022	DATE - 03/18/2022	REVISED -

STATE OF ILLINOIS
CHRISTIAN COUNTY HIGHWAY DEPARTMENT

STATION CROSS SECTIONS

SCALE: 5H:2V | SHEET NO. 7 OF 14 SHEETS | STA. 10+50.00 TO STA. 10+50.00

T.R.	SECTION	COUNTY	TOTAL SHEETS	SHEET NO.
196A	19-07116-00-BR	CHRISTIAN	33	26
LOCUST ROAD DISTRICT		CONTRACT NO.		
		ILLINOIS	FED. AID PROJECT	

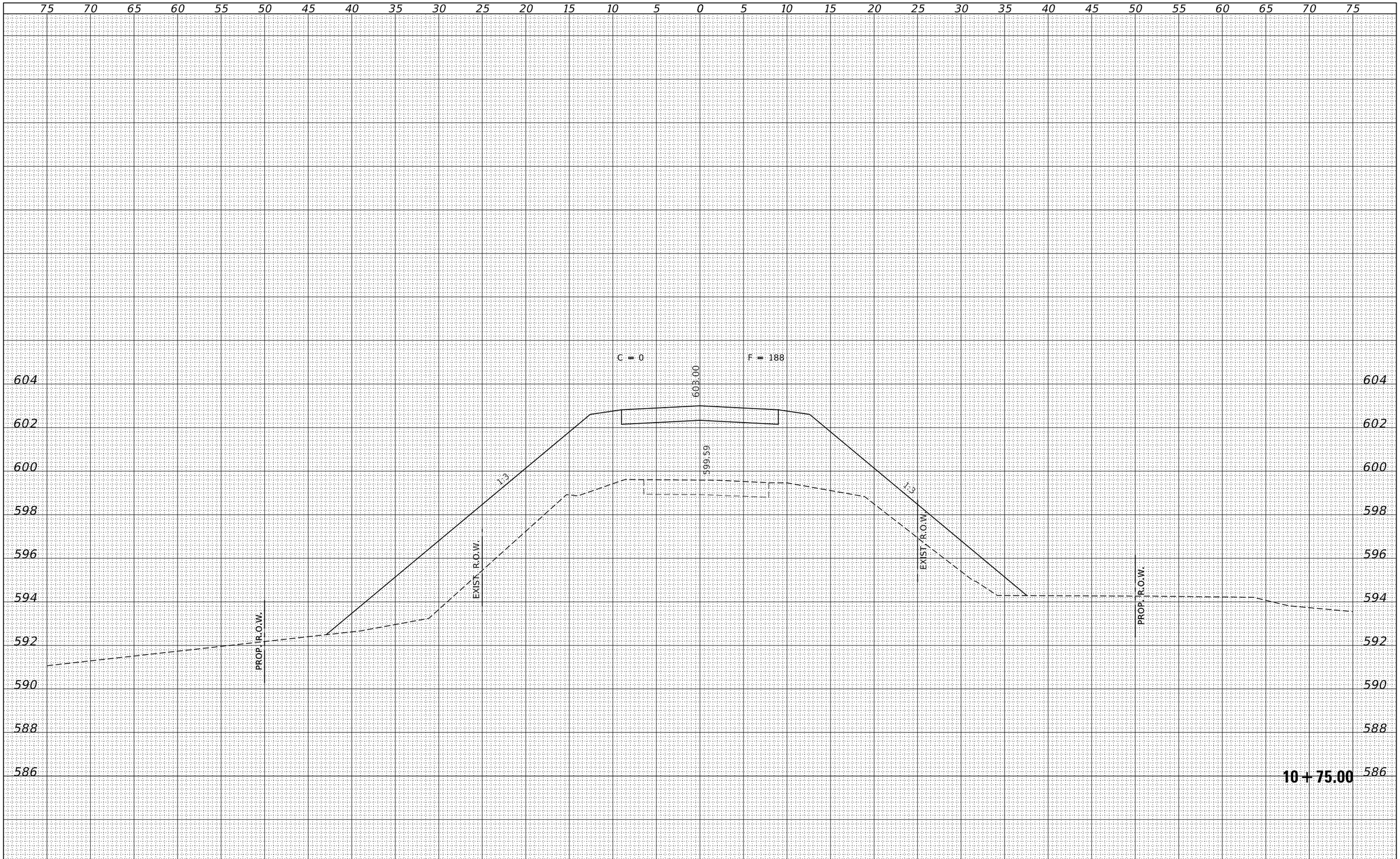

FINAL SURVEY		BY	DATE
NOTE BOOK	SURVEYED		
	PLOTTED		
	TEMPLATE		
	AREAS		
NO.	AREAS CHECKED		

ORIGINAL SURVEY		BY	DATE
NOTE BOOK	SURVEYED		
	PLOTTED		
	TEMPLATE		
	AREAS		
NO.	AREAS CHECKED		

FILE NAME = 190657-sht-xssheets.dgn

USER NAME =

PLOT SCALE = $SCALE$

PLOT DATE = 3/18/2022

DESIGNED - S.A.A.

DRAWN - T.W.K.

CHECKED - J.W.F.

DATE - 03/18/2022

REVISED -

REVISED -

REVISED -

REVISED -

HAMPTON, LENZINI AND RENWICK, INC.
3085 STEVENSON DRIVE, SUITE 201
SPRINGFIELD, ILLINOIS 62703
ILLINOIS PROFESSIONAL DESIGN FIRM
LS / PE / SE CORP. 184.000959

STATE OF ILLINOIS
CHRISTIAN COUNTY HIGHWAY DEPARTMENT

STATION CROSS SECTIONS

SCALE: 5H:2V | SHEET NO. 8 OF 14 SHEETS | STA. 10+75.00 TO STA. 10+75.00

T.R.	SECTION	COUNTY	TOTAL SHEETS	SHEET NO.
196A	19-07116-00-BR	CHRISTIAN	33	27
LOCUST ROAD DISTRICT		CONTRACT NO.		
		ILLINOIS	FED. AID PROJECT	

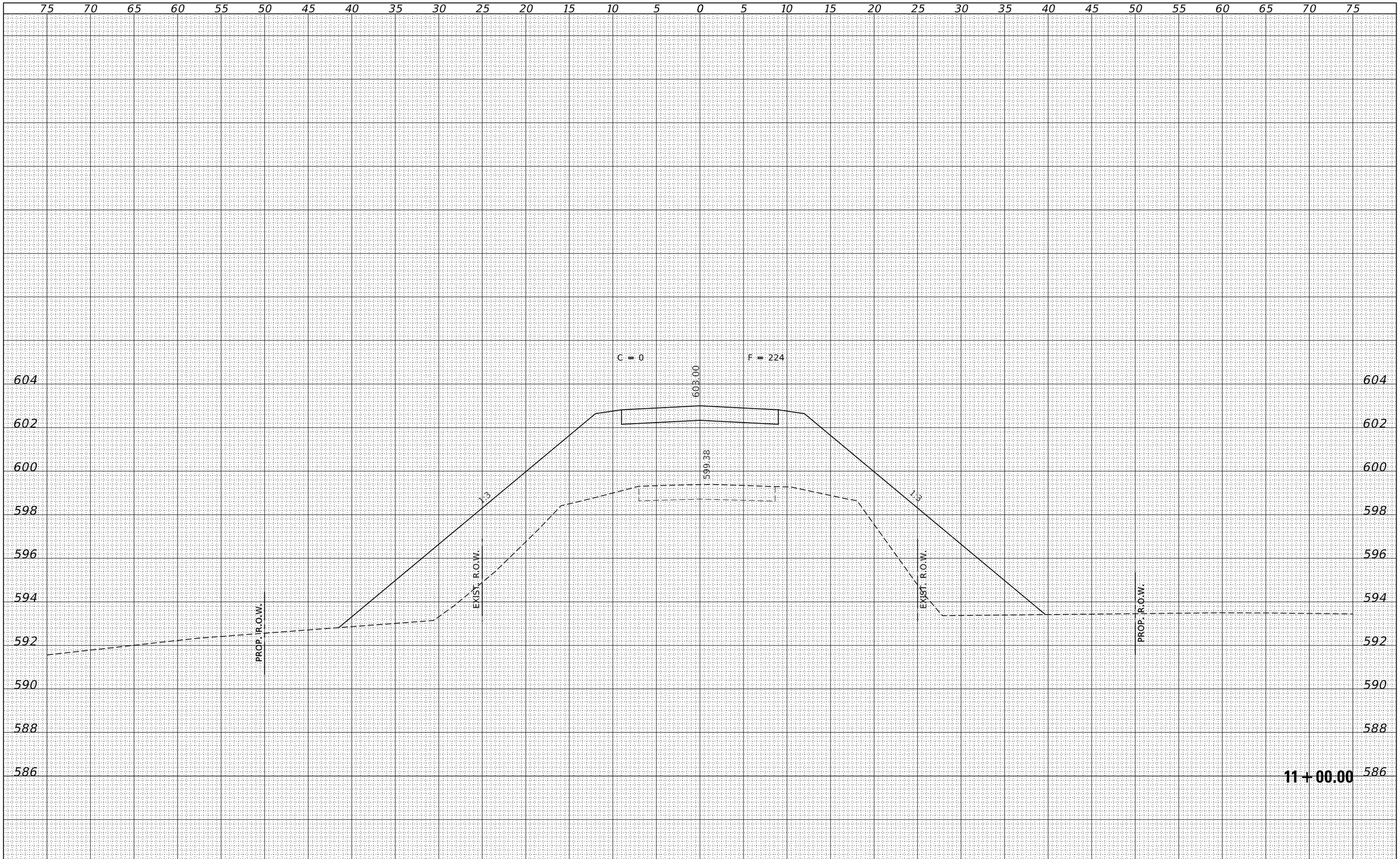

FINAL SURVEY		BY	DATE
NOTE BOOK	SURVEYED		
	PLOTTED		
	TEMPLATE		
	AREAS		
NO.	AREAS CHECKED		

ORIGINAL SURVEY		BY	DATE
NOTE BOOK	SURVEYED		
	PLOTTED		
	TEMPLATE		
	AREAS		
NO.	AREAS CHECKED		

FILE NAME = 190657-sht-xssheets.dgn

USER NAME =

PLOT SCALE = $SCALE$

PLOT DATE = 3/18/2022

DESIGNED - S.A.A.

DRAWN - T.W.K.

CHECKED - J.W.F.

DATE - 03/18/2022

REVISED -

REVISED -

REVISED -

REVISED -

HAMPTON, LENZINI AND RENWICK, INC.
3085 STEVENSON DRIVE, SUITE 201
SPRINGFIELD, ILLINOIS 62703
ILLINOIS PROFESSIONAL DESIGN FIRM
LS / PE / SE CORP. 184.000959

STATE OF ILLINOIS
CHRISTIAN COUNTY HIGHWAY DEPARTMENT

STATION CROSS SECTIONS

SCALE: 5H:2V | SHEET NO. 9 OF 14 SHEETS | STA. 11+00.00 TO STA. 11+00.00

T.R.	SECTION	COUNTY	TOTAL SHEETS	SHEET NO.
196A	19-07116-00-BR	CHRISTIAN	33	28
LOCUST ROAD DISTRICT		CONTRACT NO.		
		ILLINOIS	FED. AID PROJECT	

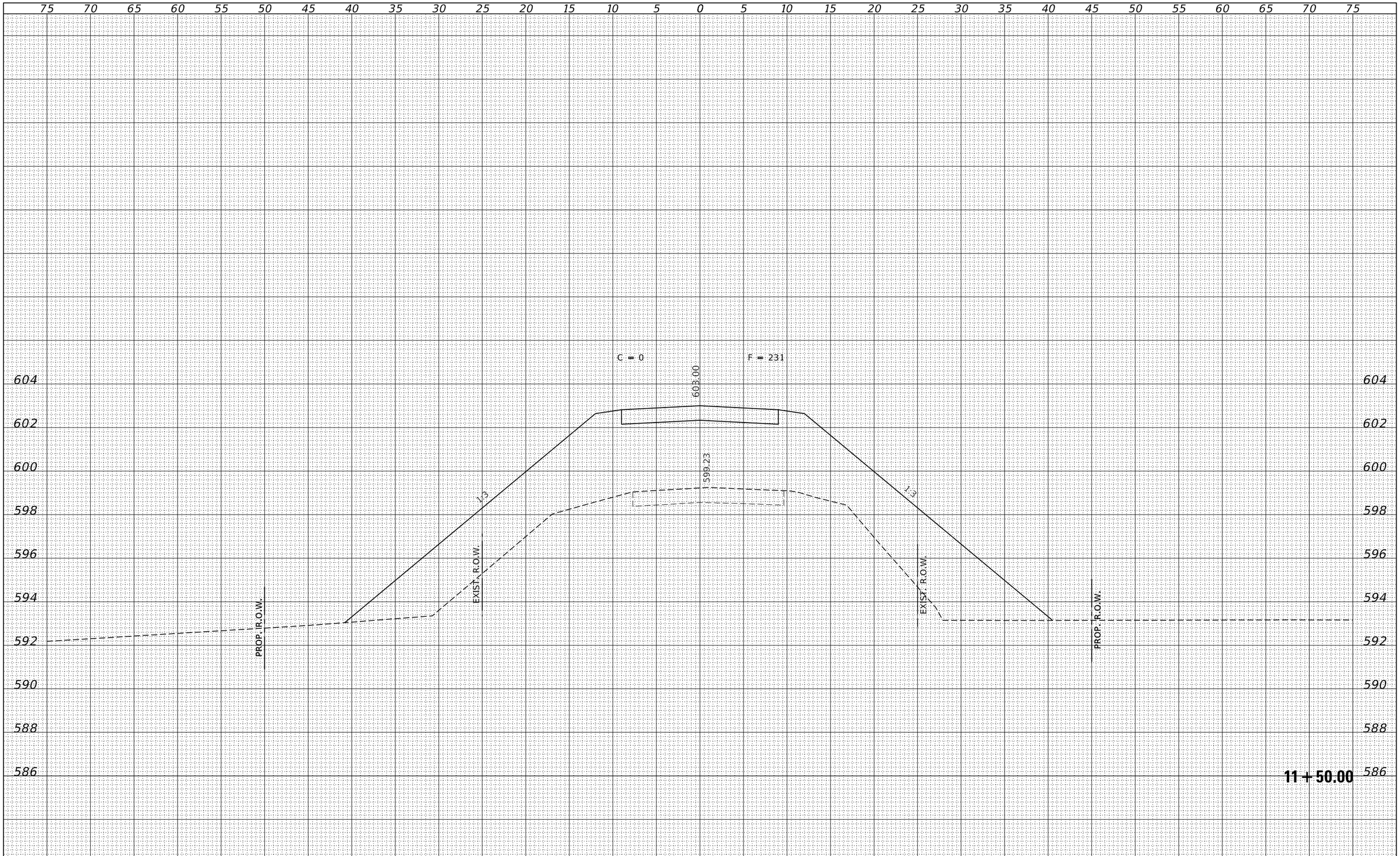

FINAL SURVEY		BY	DATE
NOTE BOOK	SURVEYED		
	PLOTTED		
	TEMPLATE		
	AREAS		
NO.	AREAS CHECKED		

ORIGINAL SURVEY		BY	DATE
NOTE BOOK	SURVEYED		
	PLOTTED		
	TEMPLATE		
	AREAS		
NO.	AREAS CHECKED		

FILE NAME = 190657-sht-xssheets.dgn	USER NAME =	DESIGNED - S.A.A.	REVISED -
HAMPTON, LENZINI AND RENWICK, INC. 3085 STEVENSON DRIVE, SUITE 201 SPRINGFIELD, ILLINOIS 62703		DRAWN - T.W.K.	REVISED -
ILLINOIS PROFESSIONAL DESIGN FIRM LS / PE / SE CORP. 184.000959	PLOT SCALE = $SCALE$	CHECKED - J.W.F.	REVISED -
	PLOT DATE = 3/18/2022	DATE - 03/18/2022	REVISED -

STATE OF ILLINOIS
CHRISTIAN COUNTY HIGHWAY DEPARTMENT

STATION CROSS SECTIONS

SCALE: 5H:2V | SHEET NO. 10 OF 14 SHEETS | STA. 11+50.00 TO STA. 11+50.00

T.R.	SECTION	COUNTY	TOTAL SHEETS	SHEET NO.
196A	19-07116-00-BR	CHRISTIAN	33	29
LOCUST ROAD DISTRICT		CONTRACT NO.		
		ILLINOIS	FED. AID PROJECT	

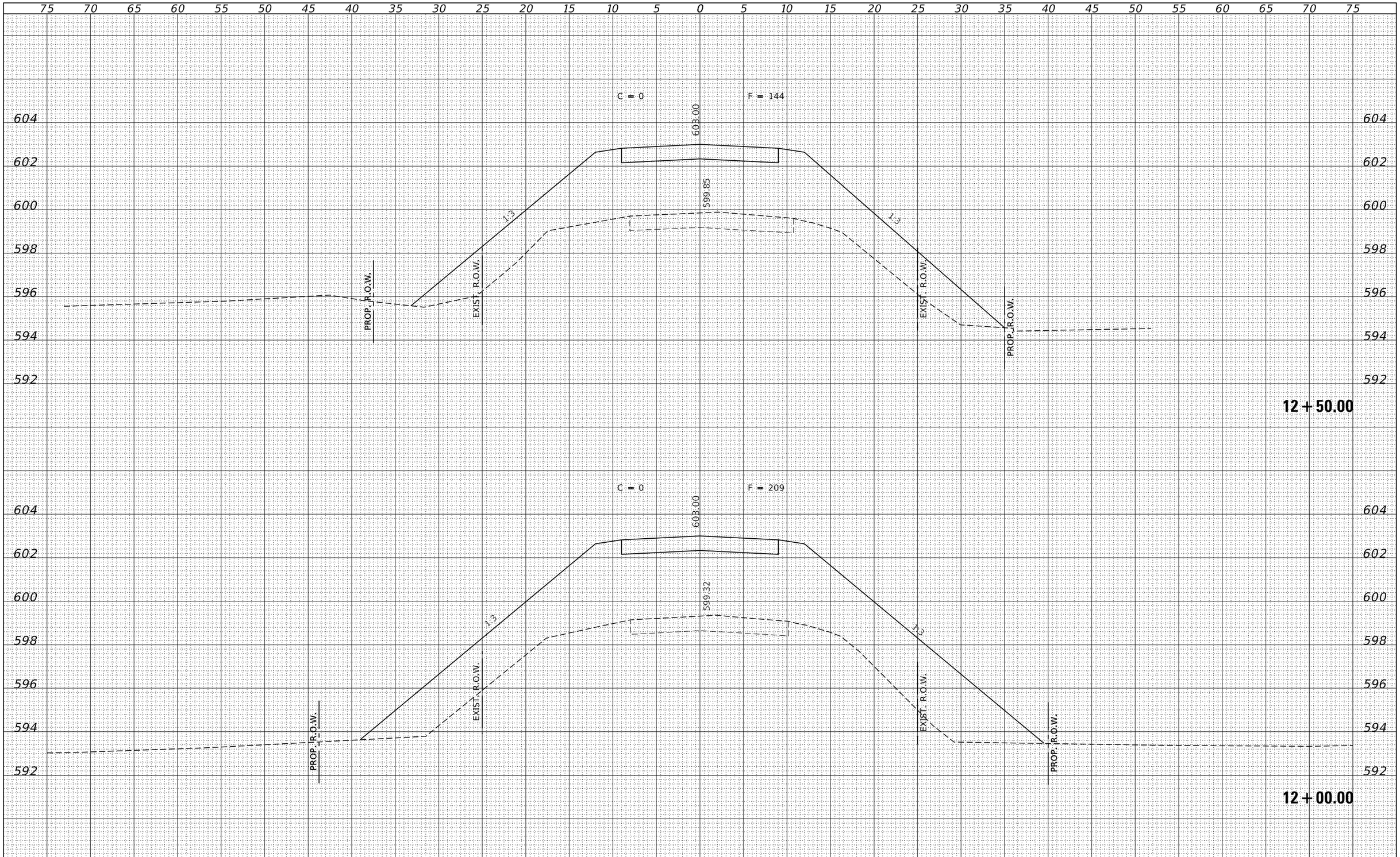

FINAL SURVEY		BY	DATE
NOTE BOOK	SURVEYED		
	PLOTTED		
	TEMPLATE		
	AREAS		
	AREAS CHECKED		
NO.			

ORIGINAL SURVEY		BY	DATE
NOTE BOOK	SURVEYED		
	PLOTTED		
	TEMPLATE		
	AREAS		
	AREAS CHECKED		
NO.			

FILE NAME = 190657-sht-xssheets.dgn	USER NAME =	DESIGNED - S.A.A.	REVISED -
HAMPTON, LENZINI AND RENWICK, INC. 3085 STEVENSON DRIVE, SUITE 201 SPRINGFIELD, ILLINOIS 62703		DRAWN - T.W.K.	REVISED -
ILLINOIS PROFESSIONAL DESIGN FIRM LS / PE / SE CORP. 184.000959	PLOT SCALE = $SCALE$	CHECKED - J.W.F.	REVISED -
	PLOT DATE = 3/18/2022	DATE - 03/18/2022	REVISED -

STATE OF ILLINOIS
CHRISTIAN COUNTY HIGHWAY DEPARTMENT

STATION CROSS SECTIONS

SCALE: 5H:2V | SHEET NO. 11 OF 14 SHEETS | STA. 12+00.00 TO STA. 12+50.00

T.R.	SECTION	COUNTY	TOTAL SHEETS	SHEET NO.
196A	19-07116-00-BR	CHRISTIAN	33	30
LOCUST ROAD DISTRICT		CONTRACT NO.		
		ILLINOIS	FED. AID PROJECT	

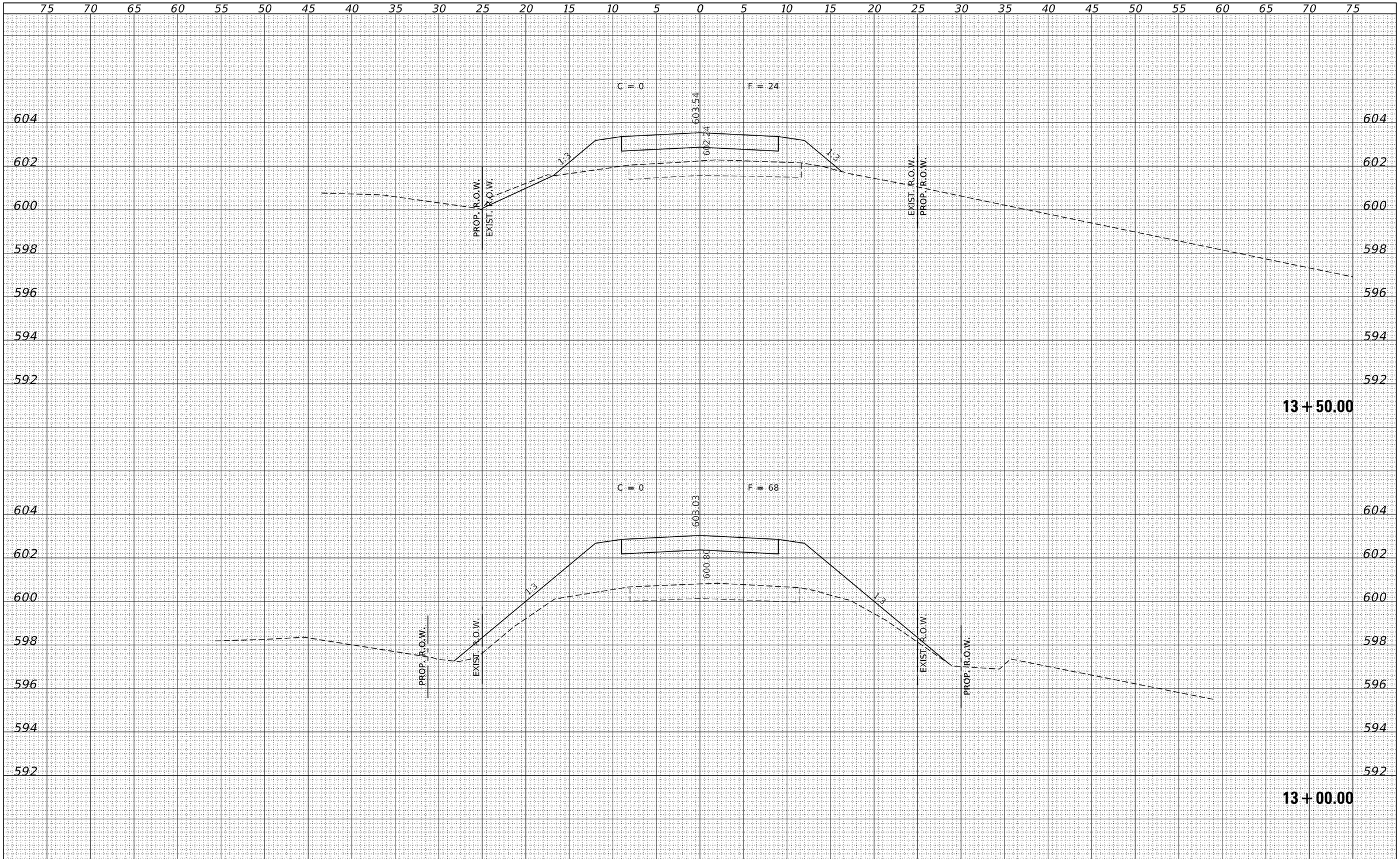

FINAL SURVEY		BY	DATE
NOTE BOOK	SURVEYED		
	PLOTTED		
	TEMPLATE		
	AREAS		
	AREAS CHECKED		
NO.			

ORIGINAL SURVEY		BY	DATE
NOTE BOOK	SURVEYED		
	PLOTTED		
	TEMPLATE		
	AREAS		
	AREAS CHECKED		
NO.			

FILE NAME = 190657-sht-xssheets.dgn	USER NAME =	DESIGNED - S.A.A.	REVISED -
HAMPTON, LENZINI AND RENWICK, INC. 3085 STEVENSON DRIVE, SUITE 201 SPRINGFIELD, ILLINOIS 62703		DRAWN - T.W.K.	REVISED -
ILLINOIS PROFESSIONAL DESIGN FIRM LS / PE / SE CORP. 184.000959	PLOT SCALE = $SCALE$	CHECKED - J.W.F.	REVISED -
	PLOT DATE = 3/18/2022	DATE - 03/18/2022	REVISED -

STATE OF ILLINOIS
CHRISTIAN COUNTY HIGHWAY DEPARTMENT

STATION CROSS SECTIONS

SCALE: 5H:2V | SHEET NO. 12 OF 14 SHEETS | STA. 13+00.00 TO STA. 13+50.00

T.R.	SECTION	COUNTY	TOTAL SHEETS	SHEET NO.
196A	19-07116-00-BR	CHRISTIAN	33	31
LOCUST ROAD DISTRICT		CONTRACT NO.		
		ILLINOIS	FED. AID PROJECT	

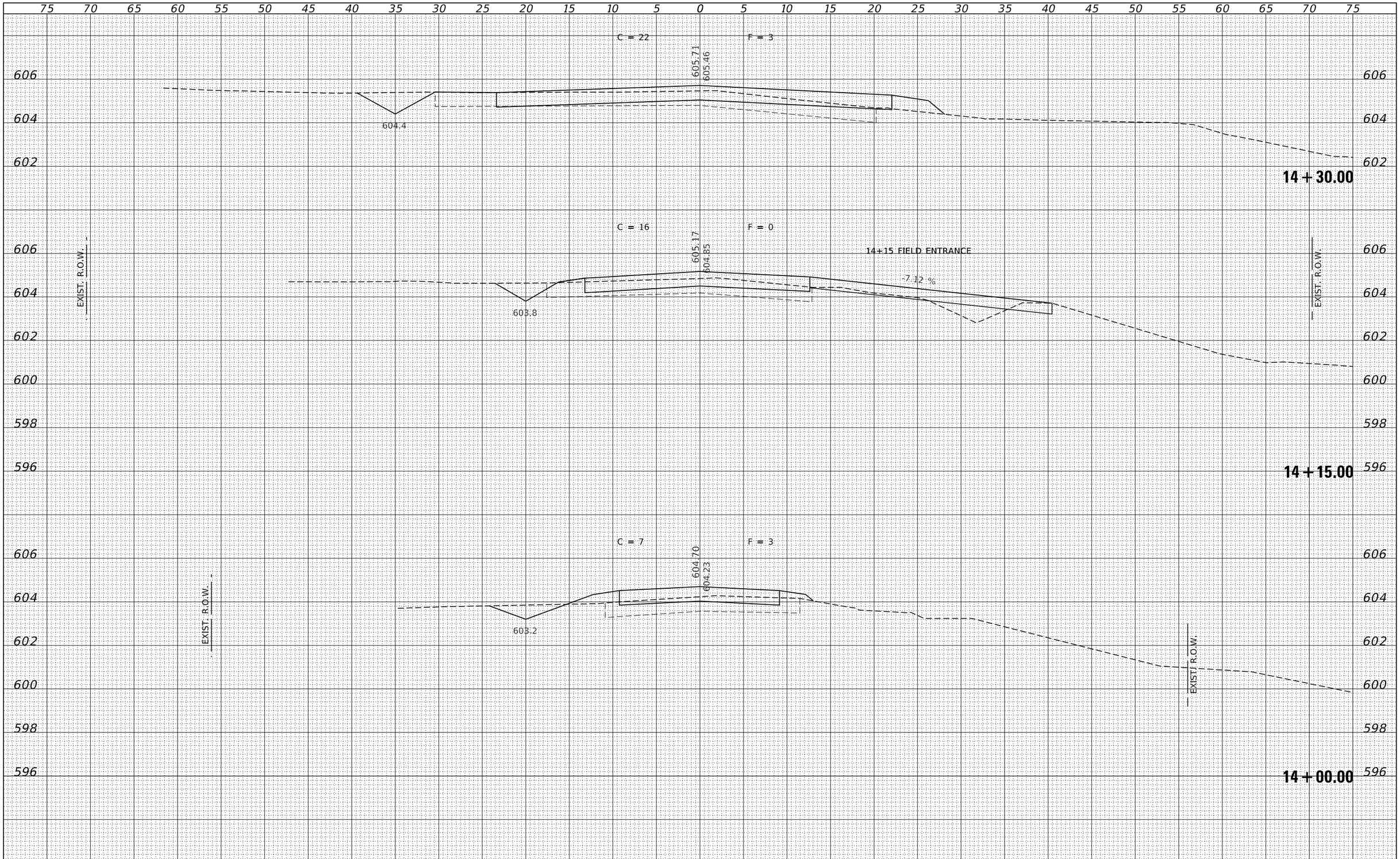

FINAL SURVEY		BY	DATE
NOTE BOOK	SURVEYED		
	PLOTTED		
	TEMPLATE		
	AREAS		
NO.	AREAS CHECKED		

ORIGINAL SURVEY		BY	DATE
NOTE BOOK	SURVEYED		
	PLOTTED		
	TEMPLATE		
	AREAS		
NO.	AREAS CHECKED		

FILE NAME = 190657-sht-xssheets.dgn	USER NAME =	DESIGNED - S.A.A.	REVISED -
HAMPTON, LENZINI AND RENWICK, INC. 3085 STEVENSON DRIVE, SUITE 201 SPRINGFIELD, ILLINOIS 62703		DRAWN - T.W.K.	REVISED -
ILLINOIS PROFESSIONAL DESIGN FIRM LS / PE / SE CORP. 184.000959	PLOT SCALE = $SCALE$	CHECKED - J.W.F.	REVISED -
	PLOT DATE = 3/18/2022	DATE - 03/18/2022	REVISED -

STATE OF ILLINOIS
CHRISTIAN COUNTY HIGHWAY DEPARTMENT

STATION CROSS SECTIONS

SCALE: 5H:2V | SHEET NO. 13 OF 14 SHEETS | STA. 14+00.00 TO STA. 14+30.00

T.R.	SECTION	COUNTY	TOTAL SHEETS	SHEET NO.
196A	19-07116-00-BR	CHRISTIAN	33	32
LOCUST ROAD DISTRICT		CONTRACT NO.		
		ILLINOIS	FED. AID PROJECT	

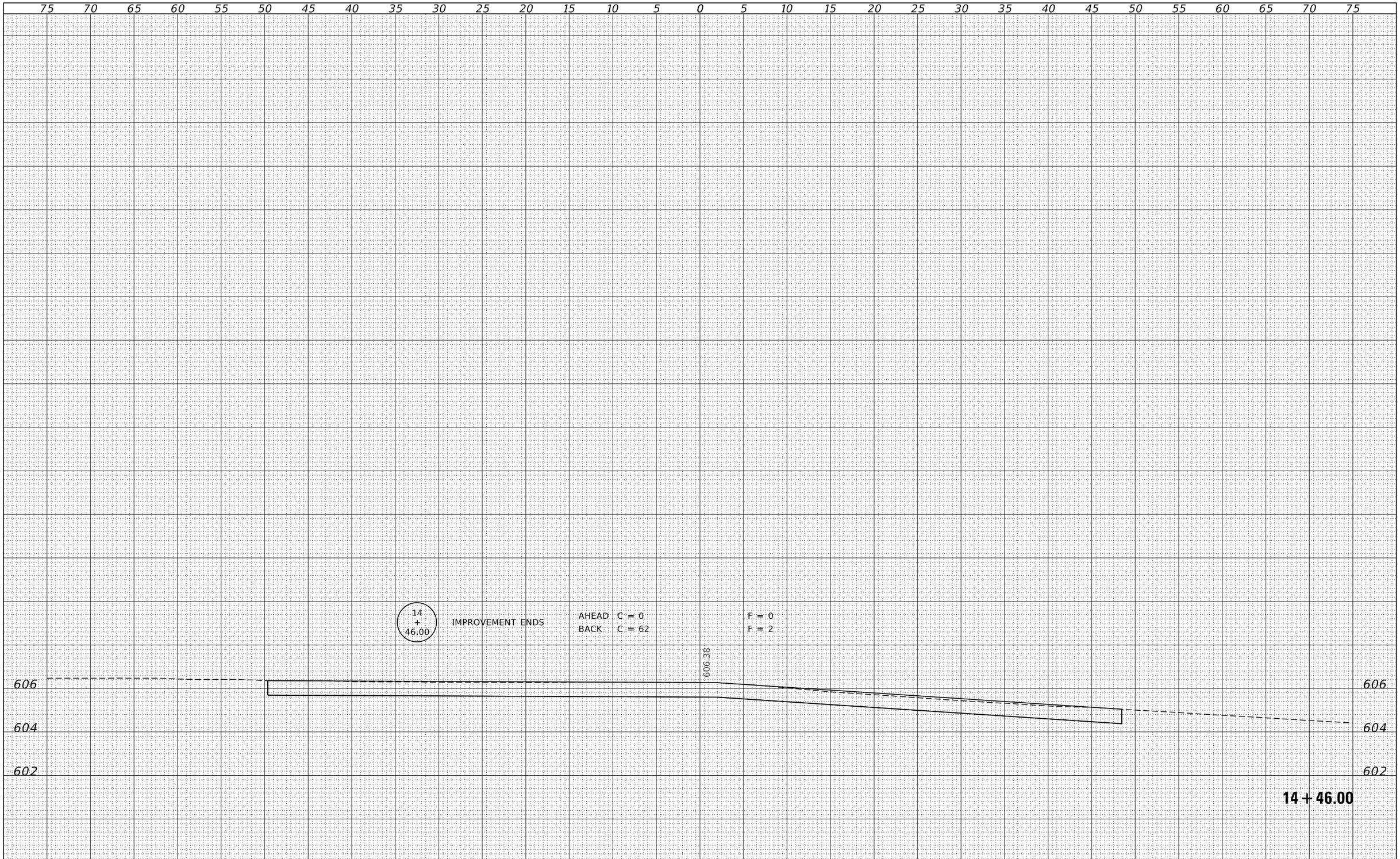

FINAL SURVEY		BY	DATE
NOTE BOOK	SURVEYED		
	PLOTTED		
	TEMPLATE		
	AREAS		
	AREAS CHECKED		
NO.			

ORIGINAL SURVEY		BY	DATE
NOTE BOOK	SURVEYED		
	PLOTTED		
	TEMPLATE		
	AREAS		
	AREAS CHECKED		
NO.			

FILE NAME = 190657-sht-xssheets.dgn	USER NAME =	DESIGNED - S.A.A.	REVISED -
HAMPTON, LENZINI AND RENWICK, INC. 3085 STEVENSON DRIVE, SUITE 201 SPRINGFIELD, ILLINOIS 62703		DRAWN - T.W.K.	REVISED -
ILLINOIS PROFESSIONAL DESIGN FIRM LS / PE / SE CORP. 184.000959	PLOT SCALE = $SCALE$	CHECKED - J.W.F.	REVISED -
	PLOT DATE = 3/18/2022	DATE - 03/18/2022	REVISED -

STATE OF ILLINOIS
CHRISTIAN COUNTY HIGHWAY DEPARTMENT

STATION CROSS SECTIONS

SCALE: 5H:2V | SHEET NO. 14 OF 14 SHEETS | STA. 14+50.00 TO STA. 14+50.00

T.R.	SECTION	COUNTY	TOTAL SHEETS	SHEET NO.
196A	19-07116-00-BR	CHRISTIAN	33	33
LOCUST ROAD DISTRICT		CONTRACT NO.		
		ILLINOIS	FED. AID PROJECT	