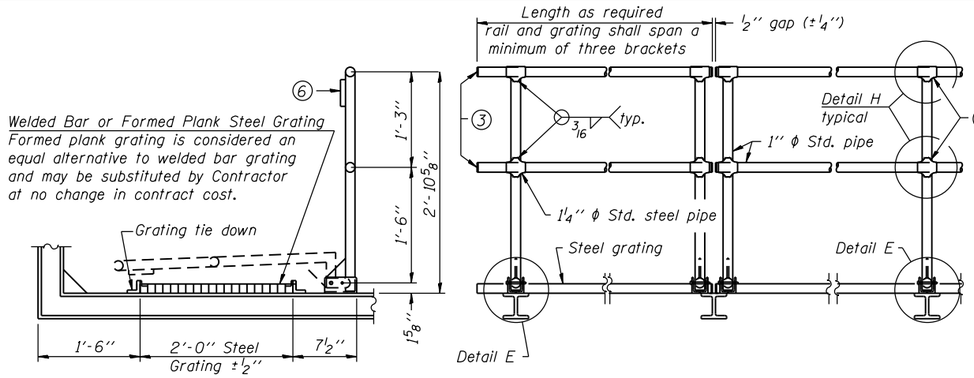

SIDE ELEVATION

DETAIL D HANDRAIL

FRONT ELEVATION

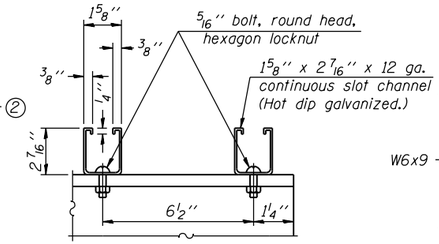

SECTION F-F

LIGHTING FIXTURE MOUNTS

(If required)

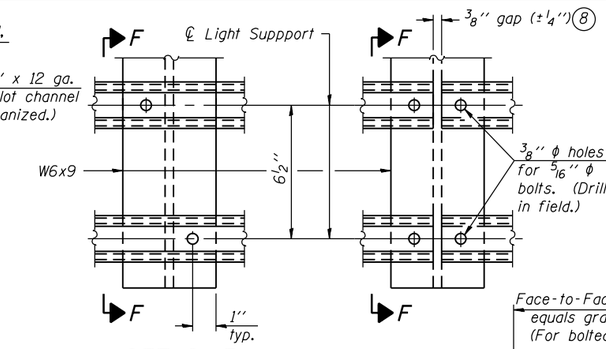

DETAIL F

DETAIL G

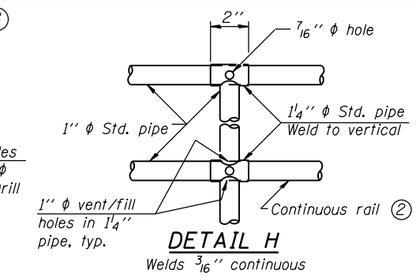

DETAIL H

Welds 3/16" continuous

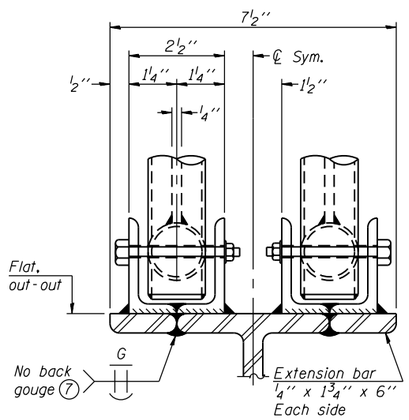

ELEVATION AT HANDRAIL JOINT

(Details not shown same as "FRONT ELEVATION")

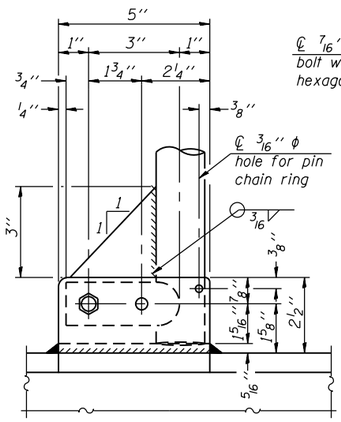

SIDE ELEVATION

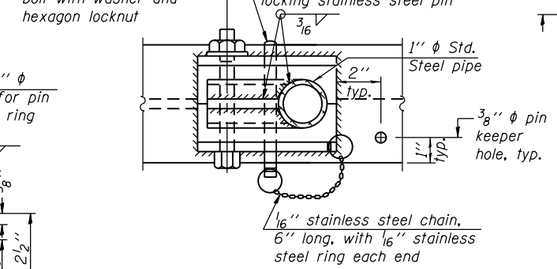

PLAN AT SINGLE HANDRAIL HINGE

DETAIL E

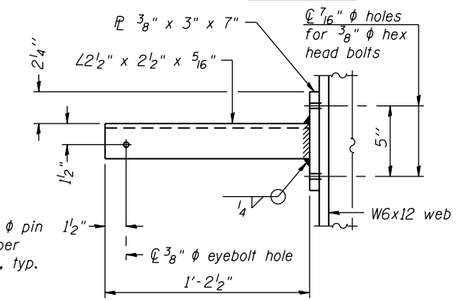

SECTION P-P

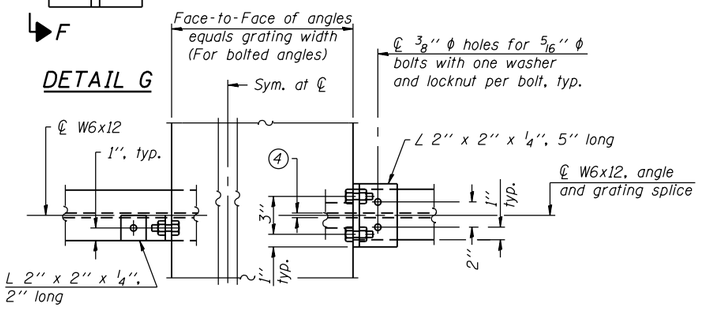

GRATING CONTINUOUS

AT GRATING SPLICE

VIEW W-W

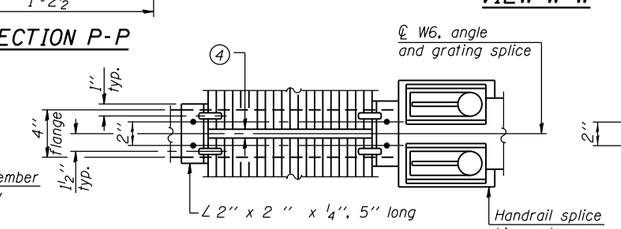

(AT WALKWAY GRATING SPLICE)

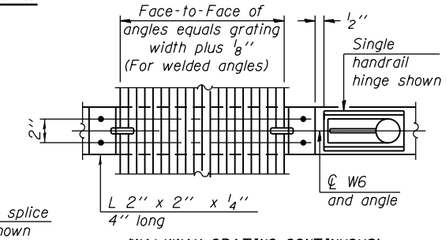

(WALKWAY GRATING CONTINUOUS)

PLAN

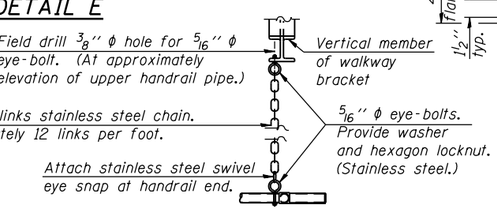

No Sign at Bracket

SAFETY CHAIN

One (1) required for each end of each walkway.

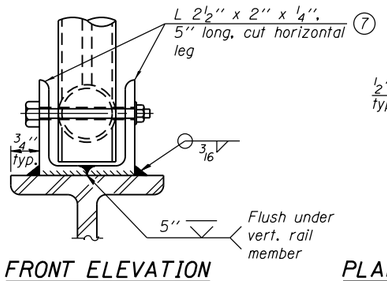

FRONT ELEVATION

(See above Elevations for dimensions.)

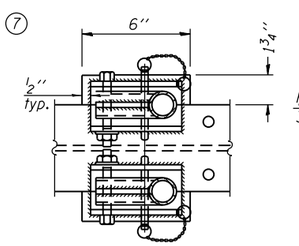

PLAN AT HANDRAIL JOINT

(For Details, see Elevations.)

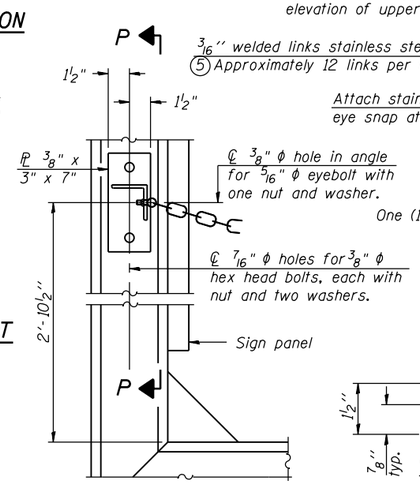

SAFETY CHAIN ATTACHMENT

(With Sign Present)

Items not shown same as "SIDE ELEVATION" and "SAFETY CHAIN"

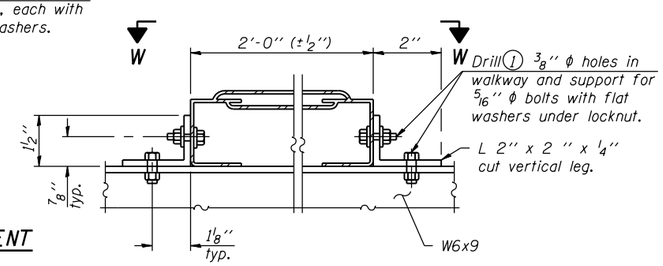

ALTERNATE FORMED PLANK GRATING DETAILS

Plank Grating: nominal depth = 2 1/2" (±1/2"); perforated or expanded steel sheet with a non-skid surface (non-serrated) concentrated load capacity = 500 lbs. with 6'-0" clear span.

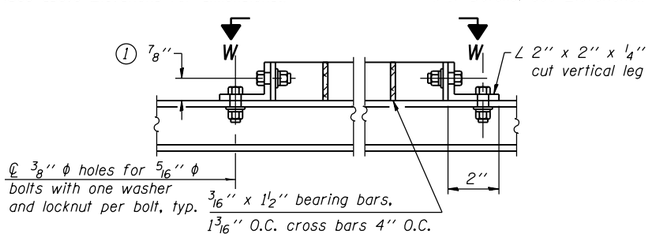

WELDED BAR GRATING DETAILS

NOTES

1. Drilling holes in grating may be done in shop or field, based on Contractor's preference and subject to accurate alignment. Field drilled holes must be touched up with galvanized paint.
2. Horizontal rail member shall be continuous thru 1 1/4" ϕ pipe. Provide 7/16" ϕ hole in 1 1/4"ϕ pipe for 3/8" ϕ bolt. Field drill 7/16" ϕ hole in horizontal rail member. Provide washer and locknut for bolt. (Use 5/16" eyebolts in 7/16" ϕ holes on top rail at ends only.)
3. Install standard force-fit end caps or weld 1/8" end plates with 1/8" c.f.w. and grind smooth. (All rail ends.)
4. 3/8" (±1/4") gap between grating panels at splice.
5. Chain to be type 304L stainless steel suitable for prolonged exterior exposure. Approximately 3'-6" long chain per location. Maximum sag with handrail erected = 4".
6. ℙ 1/8" x 1/2" x 2" welded to handrail posts to protect locations that contact grating.
7. Extrusions may be used in lieu of details shown, with approval by Engineer.
8. Field cut ends of light support channels shall be free of burrs or hazardous projections and coated with zinc-rich primer or equivalent.

BM-4

6-1-12

60W28_SignStructure_Sheet10.dgn

AECOM

USER NAME = patelv1	DESIGNED - VP	REVISED	
	CHECKED - DD	REVISED	
PLOT SCALE = N.T.S.	DRAWN - VP	REVISED	
PLOT DATE = 5/9/2014	CHECKED - ATB	REVISED	

STATE OF ILLINOIS
DEPARTMENT OF TRANSPORTATION

BRIDGE MOUNT SIGN STRUCTURES
WALKWAY DETAILS

SHEET NO. 50H-10 OF 50H-10 SHEETS

F.A.I. RTE.	SECTION	COUNTY	TOTAL SHEETS	SHEET NO.
90/94/290	2013-010R	COOK	747	290A
		CONTRACT NO. 60W28		
	ILLINOIS FED. AID PROJECT			