STATE OF ILLINOIS
DEPARTMENT OF TRANSPORTATION

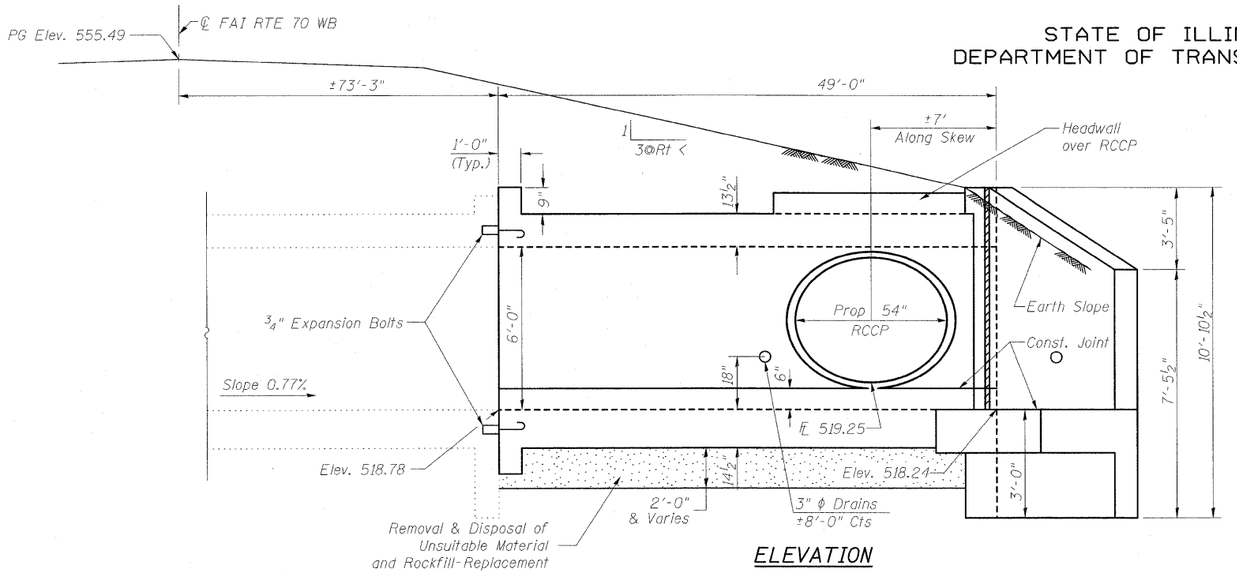

ELEVATION

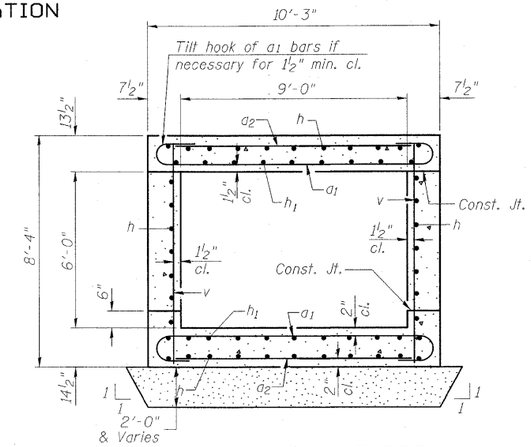

SECTION THRU BARREL

Calculated Max. Soil Pressure Under Barrel = 2000 psf

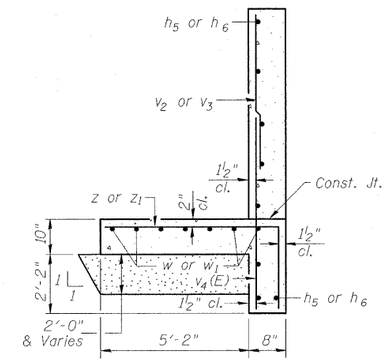

SECTION A-A

Calculated Max. Soil Pressure Under Footing = 2250 psf

LOADING HS 20-44 & ALT.

DESIGN SPECIFICATIONS

2002 AASHTO Standard Specifications for Highway Bridges

DESIGN STRESSES

EXISTING CONSTRUCTION	NEW CONSTRUCTION
fy = 40,000 psi	fy = 60,000 psi
f'c = 3,000 psi	f'c = 3,500 psi

GENERAL NOTES

Reinforcement bars shall conform to the requirements of ASTM A 706 Gr 60. See Special Provisions.

Removal of the existing wings during construction shall be completed according to Section 501.05 of the Standard Specifications.

Reinforcement bars designated (E) shall be epoxy coated.

Plan dimensions and details relative to existing structure have been taken from existing plans and are subject to nominal construction variations. It shall be the Contractor's responsibility to verify such dimensions and details in the field and make necessary approved adjustments prior to construction or ordering of materials. Such variations shall not be cause for additional compensation for a change in the scope of work, however, the Contractor will be paid for the quantity furnished at the unit price for the work.

Expansion bolts shall be according to Standard Specification Article 1006.10.

The depth of Removal and Replacement of Unsuitable Materials and Rockfill-Replacement as shown on the plans is estimated. The verification of allowable soil bearing pressure underlying the proposed box culvert and wingwall footings shall be verified by a dynamic cone penetration (DCP) test or other acceptable measures as provided by the District Geotechnical and Field Engineers. The results of the test must exceed the calculated bearing pressures shown on the plans prior to placement of the Concrete Box Culvert or Rockfill-Replacement. Tests failing to exceed the calculated bearing pressures as shown on the plans will require subsurface modification that must be coordinated with the District Geotechnical and Field Engineers.

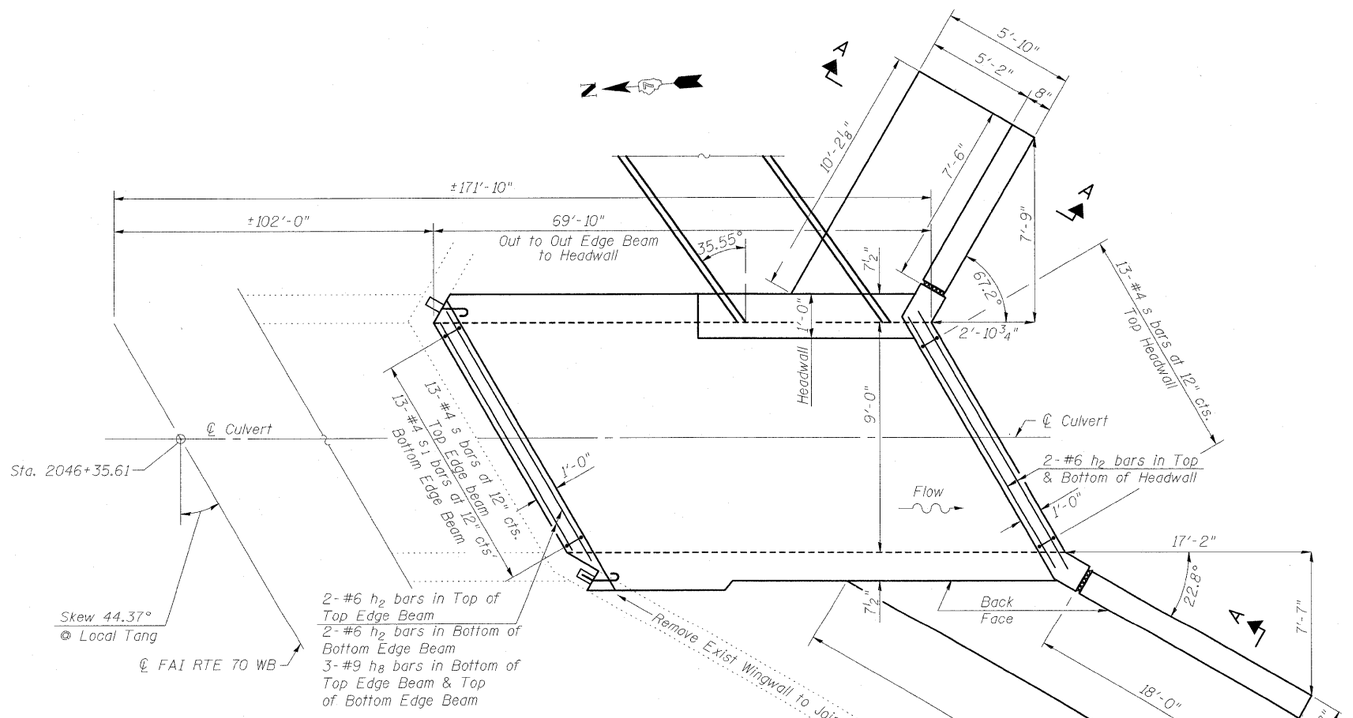

SHOWING OUTLINES

PLAN

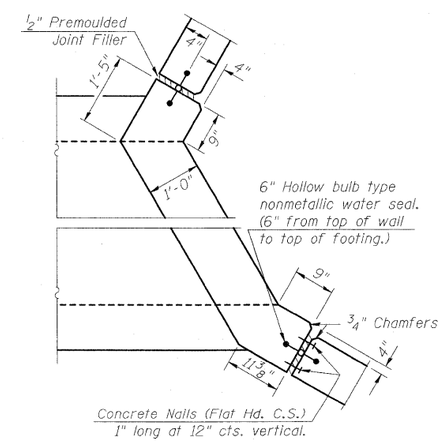

CORNER DETAIL

DESIGNED -	BB
CHECKED -	CJF
DRAWN -	RCB
CHECKED -	CJF

△1 Revised Sheet 5/21/10 CJF

LICENSED STRUCTURAL ENGINEER CHADWICK J. FULSTING 081-005834 STATE OF ILLINOIS
EXP. 11-30-2010
Chadwick J. Fulsting 5/21/2010

Illinois Design Firm Number 184.001670

BERNARDIN LOCHMUELLER & ASSOCIATES, INC.
3 Oak Drive
Maryville, IL 62062-5635
Local (618) 288-4665
Fax 618-288-4666

BOX CULVERT DETAILS
RT STA 2046+35.61
FAI ROUTE 70 WB (RDWY A)

SHEET NO. 1 OF 3 SHEETS	F.A.I RTE.	SECTION	COUNTY	TOTAL SHEETS	SHEET NO.
	57/70	(25-3)R	EFFINGHAM	1416	445
			CONTRACT NO. 74296		
	FED. ROAD DIST. NO.	ILLINOIS	FED. AID PROJECT		

159A3 PM 5/21/2010 _culvert RT 2046-35.51 sheet.dgn