STATE OF ILLINOIS
DEPARTMENT OF TRANSPORTATION

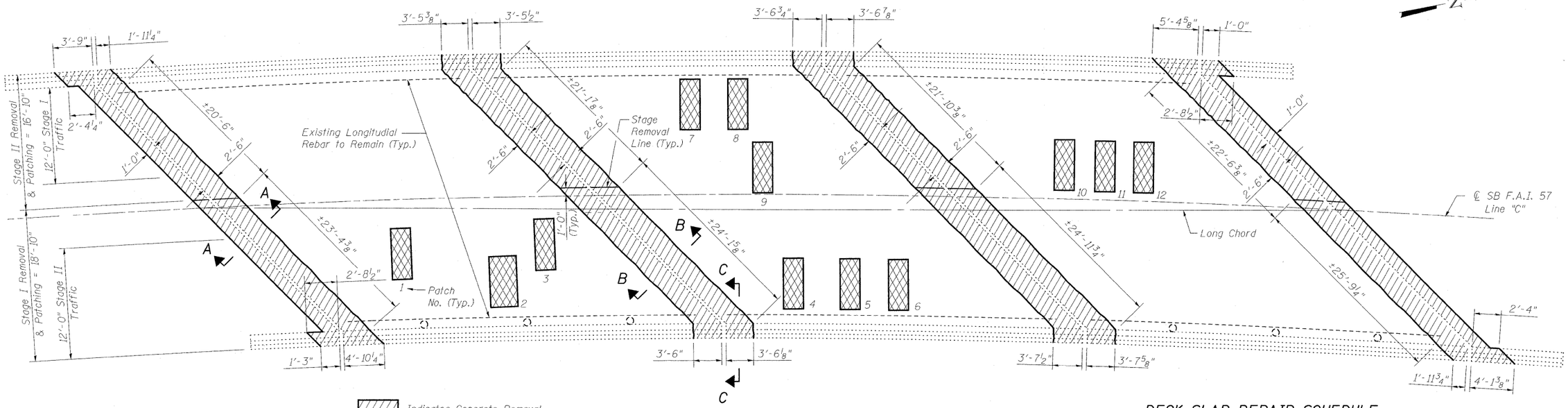

Indicates Concrete Removal

Indicates Deck Slab Repair (Full Depth, Type II)

PLAN

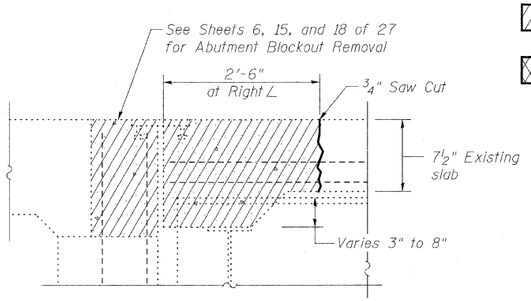

SECTION A-A

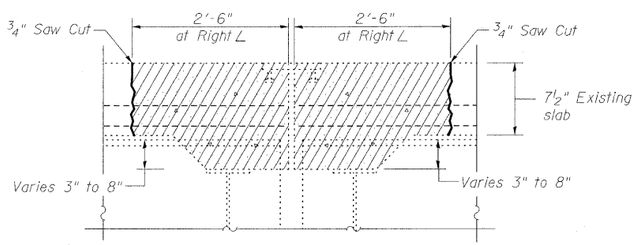

SECTION B-B

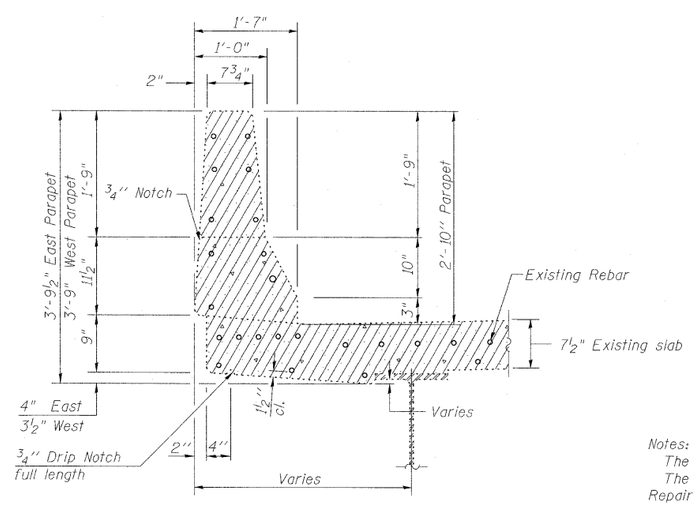

SECTION C-C

(at Right ∠)

DECK SLAB REPAIR SCHEDULE

Patch No.	Size	Deck Slab Repair (Part. Depth)	Deck Slab Repair (FD TY I)	Deck Slab Repair (FD TY II)	
1	2.0 x5.0			1.1	
2	3.0 x5.0			1.7	
3	2.0 x5.0			1.1	
4	2.0 x5.0			1.1	
5	2.0 x5.0			1.1	
6	2.0 x5.0			1.1	
7	2.0 x5.0			1.1	
8	2.0 x5.0			1.1	
9	2.0 x5.0			1.1	
10	2.0 x5.0			1.1	
11	2.0 x5.0			1.1	
12	2.0 x5.0			1.1	
	Total (Sq. Yd.)	0	0	13.8	
	Use (Sq. Yd.)	0	0	14.0	

Patch No.	Size	Deck Slab Repair (Part. Depth)	Deck Slab Repair (FD TY I)	Deck Slab Repair (FD TY II)	

Notes:

The Deck Slab Repairs shall be completed prior to placement placement of overlay.

The condition of the deck shall be inspected and surveyed for additional Deck Slab Repairs if the date of construction occurs after April 2012.

The locations and sizes of the Deck Slab Repairs are approximate. Actual locations and sizes are to be determined in the field by the Engineer..

The locations and sizes of the Deck Slab Repairs were determined by a visual survey completed on February 1, 2010.

The Engineer shall record the location of the actual Deck Slab Repair on the As Build Plans.

BILL OF MATERIAL

Item	Unit	Total
Concrete Removal	Cu. Yd.	33.0
Deck Slab Repair (Full Depth, Type II)	Sq. Yd.	14.0

CONCRETE REMOVAL & DECK SLAB REPAIR SUPERSTRUCTURE STRUCTURE NO. 025-0001

DESIGNED	B.B.
CHECKED	C.J.F.
DRAWN	W.J.S.
CHECKED	C.J.F. & B.B.

BERNARDIN LOCHMUELLER & ASSOCIATES, INC.
3 Oak Drive
Maryville, IL 62062-5635
Local-(618) 288-4665
Fax 618-288-4666

SHEET NO. 4	F.A.I. RTE.	SECTION	COUNTY	TOTAL SHEETS	SHEET NO.
27 SHEETS	57	(25-3HB)I-2	EFFINGHAM	1416	1358
	SN 025-0001		CONTRACT NO. 74296		
	FED. ROAD DIST. NO. 7	ILLINOIS	FED. AID PROJECT		

10:41:29 AM 3/18/2010 \025X001-T4294.dgn