FAP ROUTE	SECTION	COUNTY	TOTAL SHEETS	SHEET NO
310	60-16-1&1B,42-1&1B	MADISON AND JERSEY	481	24
STA	TO STA			
EXISTING CONDITIONS:				

CONTRACT NO. 76318

PLAN	SURVEYED	BY	DATE
NOTE BOOK NO. ____	PLOTTED		
	AUTOMATIC CHECKED		
	RT. OF WAY CHECKED		
	CADD FILE NAME		

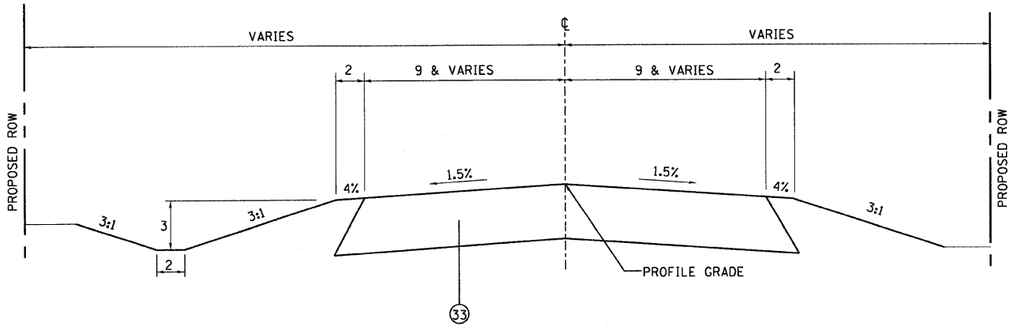

INGHAM ACCESS DRIVE

STA 170+10.00 TO STA 175+40.00

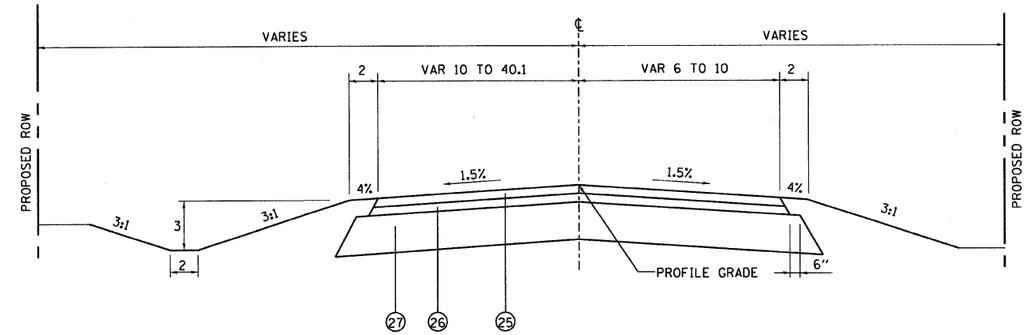

JUN ACCESS ROAD

STA 20+11.00 TO STA 25+88.0

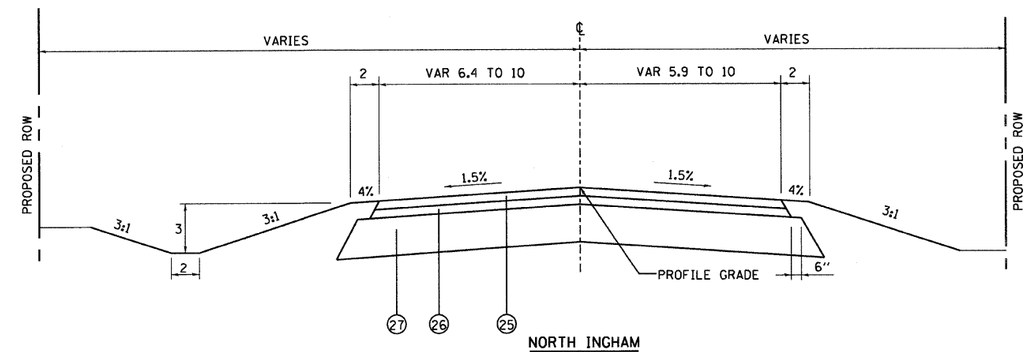

NORTH INGHAM

STA 145+70.00 TO STA 149+32.69
STA 150+66.62 TO STA 157+25.00

MATERIAL LEGEND:

17. AGGREGATE SHOULDERS, TYPE B
18. HOT-MIX ASPHALT SHOULDERS, 8"
19. PIPE UNDERDRAIN 4"
20. HOT-MIX ASPHALT PAVEMENT (FULL DEPTH) 14"
21. LIME MODIFIED SOILS 12"
22. SUBBASE GRANULAR MATERIAL, TYPE C 6"
23. HOT-MIX ASPHALT SURFACE COURSE, MIX "D", N90, 1½"
24. HOT-MIX ASPHALT BINDER COURSE, IL-19.0, N90, 3½" AND VARIES IN SUPERELEVATED SECTIONS
25. HOT-MIX ASPHALT SURFACE COURSE, MIX "C", N70, 1½"
26. LEVELING BINDER (MACHINE METHOD), N70, 1½"
27. AGGREGATE BASE COURSE, TYPE B, 8"
28. BITUMINOUS SURFACE TREATMENT, CLASS A-2
29. AGGREGATE BASE COURSE, TYPE A, 10½"
30. AGGREGATE BASE COURSE, TYPE A, 10¾"
31. AGGREGATE BASE COURSE, TYPE A, 17"
32. AGGREGATE SURFACE COURSE, TYPE A, 11"
33. AGGREGATE SURFACE COURSE, TYPE A, 11½"
34. SUBBASE GRANULAR MATERIAL TYPE B 12"
35. STRIP REFLECTIVE CRACK CONTROL TREATMENT
36. HOT-MIX ASPHALT BINDER COURSE, IL-19.0, N90, 12"
37. AGGREGATE SURFACE COURSE, TYPE B, 6"
38. HOT-MIX ASPHALT BINDER COURSE, IL-19.0, N70, 12"

NORTH INGHAM ACCESS DRIVE

STRUCTURAL DESIGN TRAFFIC: Year 2014
PV= 44 SU= 5 MU= 1
ROAD/STREET CLASSIFICATION: Class: IV
PERCENT OF STRUCTURAL DESIGN TRAFFIC IN DESIGN LANE:
P= 50% S= 50% M= 50%
TRAFFIC FACTOR: Actual TF= .0013 AC Type= 20
Minimum TF= DOES NOT APPLY
PG GRADE: Binder=_____ Surface=_____
SUBGRADE SUPPORT RATING: IBR=3.0
SSR=_____ (Sta._____to_____)
SSR=_____ (Sta._____to_____)

NORTH INGHAM

STRUCTURAL DESIGN TRAFFIC: Year 2014
PV= 212 SU= 2 MU= 1
ROAD/STREET CLASSIFICATION: Class: IV
PERCENT OF STRUCTURAL DESIGN TRAFFIC IN DESIGN LANE:
P= 50% S= 50% M= 50%
TRAFFIC FACTOR: Actual TF= 0.001 AC Type= 20
Minimum TF= DOES NOT APPLY
PG GRADE: Binder=_____ Surface=_____
SUBGRADE SUPPORT RATING: IBR=3.0
SSR=_____ (Sta._____to_____)
SSR=_____ (Sta._____to_____)

REVISIONS	
NAME	DATE

ILLINOIS DEPARTMENT OF TRANSPORTATION

PROPOSED TYPICAL SECTIONS

SIDEROADS

FAP ROUTE 310
SECTION 60-16-1&1B,42-1&1B
MADISON AND JERSEY COUNTIES

DRAWN BY: DLB CHECKED BY: GLF