FAP ROUTE	SECTION	COUNTY	TOTAL SHEETS	SHEET NO
310	60-16-1&1B,42-1&1B	MADISON AND JERSEY	481	26
STA		TO STA		
EXISTING CONDITIONS:			CONTRACT NO. 76318	

PLAN	BY	DATE
SURVEYED		
PLOTTED		
ALIGNMENT CHECKED		
RT. OF WAY CHECKED		
CADD FILE NAME		
NOTE BOOK NO.		

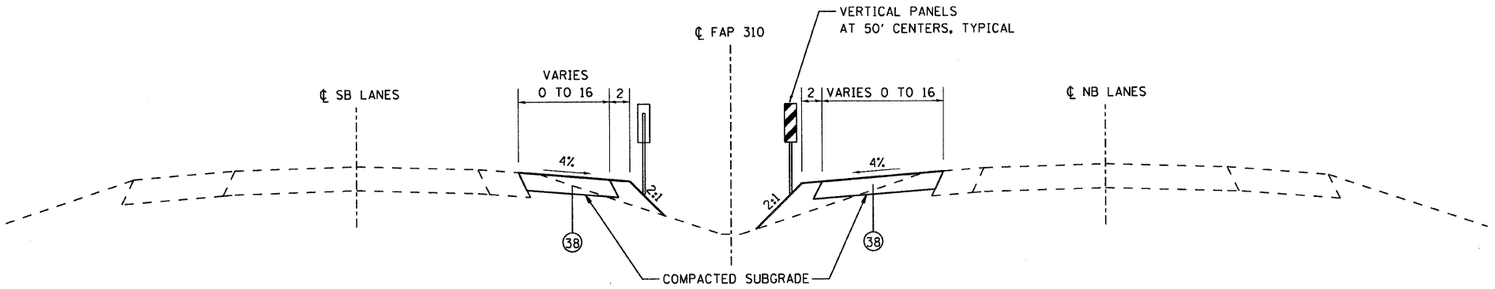

TYPICAL SECTION - CROSSOVER B

NOT TO SCALE

STA 221+89.15 TO STA 228+14.11

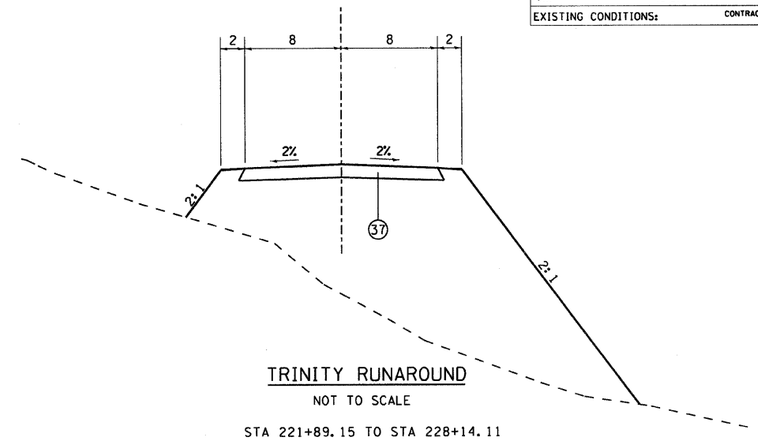

TRINITY RUNAROUND

NOT TO SCALE

STA 221+89.15 TO STA 228+14.11

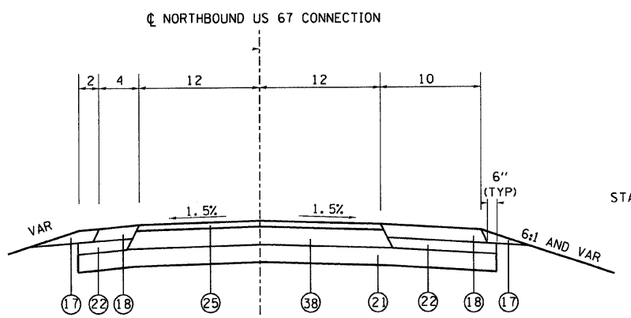

TYPICAL SECTION - TRANSITION TAPER

NOT TO SCALE

STA 331+32.50 TO STA 332+25

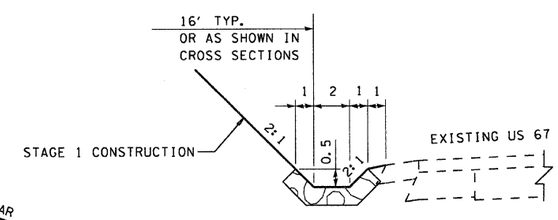

TEMPORARY RIPRAP DETAIL

NOT TO SCALE

FAP 310 STAGE I CONSTRUCTION
STA 311+00.00 TO STA 331+32.5

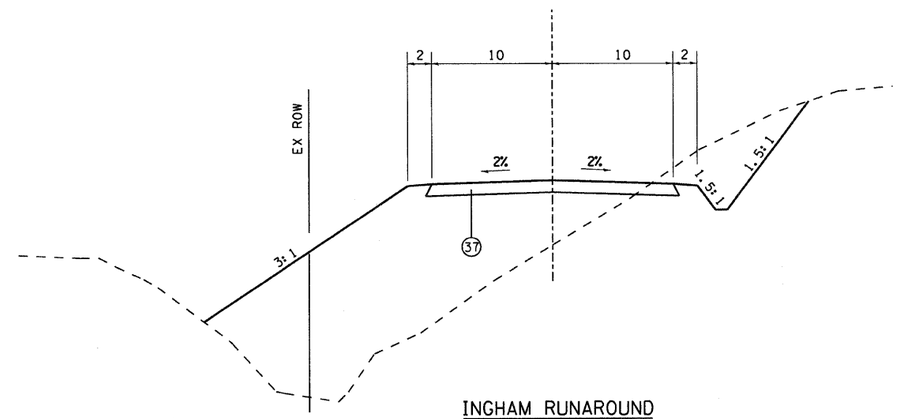

INGHAM RUNAROUND

NOT TO SCALE

STA 337+00.00 TO STA 342+57.86

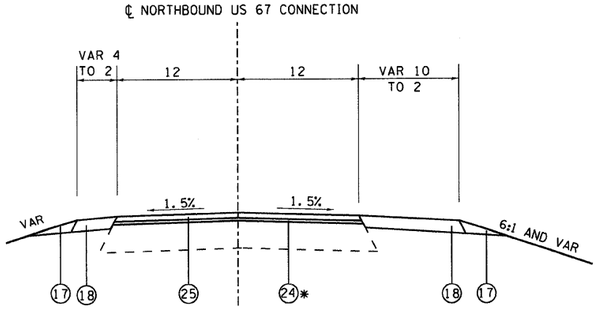

TYPICAL SECTION - TRANSITION TAPER

NOT TO SCALE
STA 332+25 TO STA 333+32.50

*THICKNESS VARIES FROM 12" TO 0"
USE LEVELING BINDER (MACHINE METHOD)
WHEN THICKNESS IS 2.25" OR LESS

MATERIAL LEGEND:

(17) AGGREGATE SHOULDERS, TYPE B
(18) HOT-MIX ASPHALT SHOULDERS, 8"
(19) PIPE UNDERDRAIN 4"
(20) HOT-MIX ASPHALT PAVEMENT (FULL DEPTH) 14"
(21) LIME MODIFIED SOILS 12"
(22) SUBBASE GRANULAR MATERIAL, TYPE C 6"
(23) HOT-MIX ASPHALT SURFACE COURSE, MIX "D", N90, 1½"
(24) HOT-MIX ASPHALT BINDER COURSE, IL-19.0, N90, 3½" AND VARIES IN SUPERELEVATED SECTIONS
(25) HOT-MIX ASPHALT SURFACE COURSE, MIX "C", N70, 1½"
(26) LEVELING BINDER (MACHINE METHOD), N70, 1½"
(27) AGGREGATE BASE COURSE, TYPE B, 8"
(28) BITUMINOUS SURFACE TREATMENT, CLASS A-2
(29) AGGREGATE BASE COURSE, TYPE A, 10½"
(30) AGGREGATE BASE COURSE, TYPE A, 10¾"
(31) AGGREGATE BASE COURSE, TYPE A, 17"
(32) AGGREGATE SURFACE COURSE, TYPE A, 11"
(33) AGGREGATE SURFACE COURSE, TYPE A, 11½"
(34) SUBBASE GRANULAR MATERIAL TYPE B 12"
(35) STRIP REFLECTIVE CRACK CONTROL TREATMENT
(36) HOT-MIX ASPHALT BINDER COURSE, IL-19.0, N90, 12"
(37) AGGREGATE SURFACE COURSE, TYPE B, 6"
(38) HOT-MIX ASPHALT BINDER COURSE, IL-19.0, N70, 12"

ALL UNITS ARE IN FEET
UNLESS OTHERWISE SHOWN

REVISIONS	
NAME	DATE

ILLINOIS DEPARTMENT OF TRANSPORTATION

MOT TYPICAL SECTIONS

CROSSOVERS AND DETOURS

FAP ROUTE 310
SECTION 60-16-1&1B,42-1&1B
MADISON AND JERSEY COUNTIES

DRAWN BY: DLB CHECKED BY: WTS