T.R. RTE.	SECTION	COUNTY	TOTAL SHEETS	SHEET NO.
336A	08-15131-00-BR	SHELBY	13	7
		CONTRACT NO. 95580		
FED. ROAD DIST. NO. _	ILLINOIS	FED. AID PROJECT		

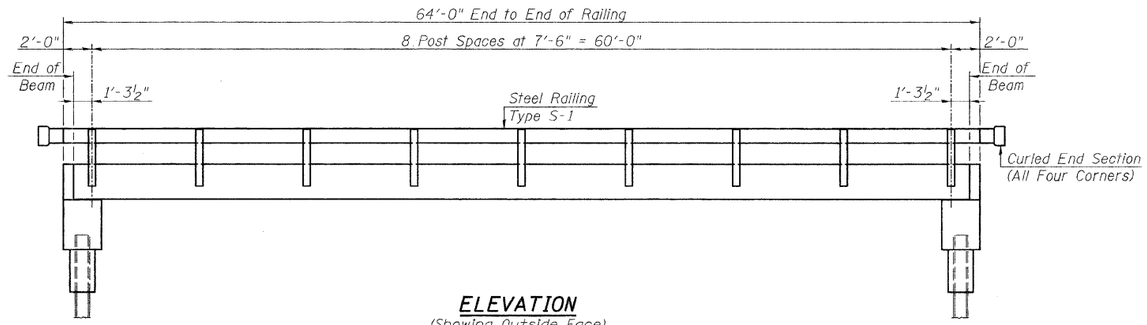

ELEVATION
(Showing Outside Face)

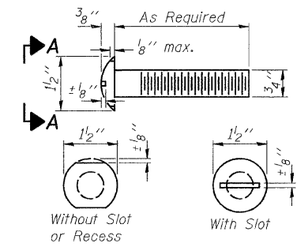

VIEW A-A
ROUND HEAD BOLT

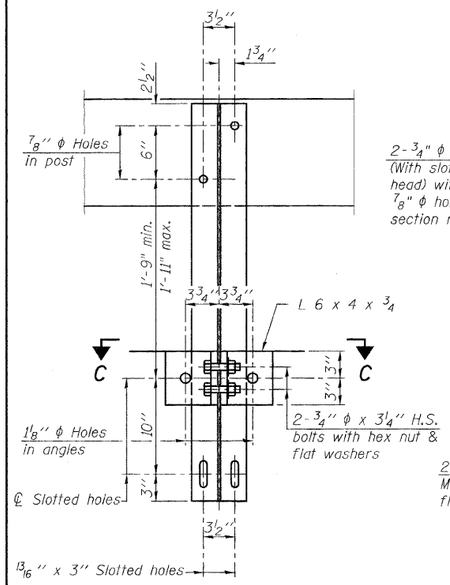

SECTION B-B

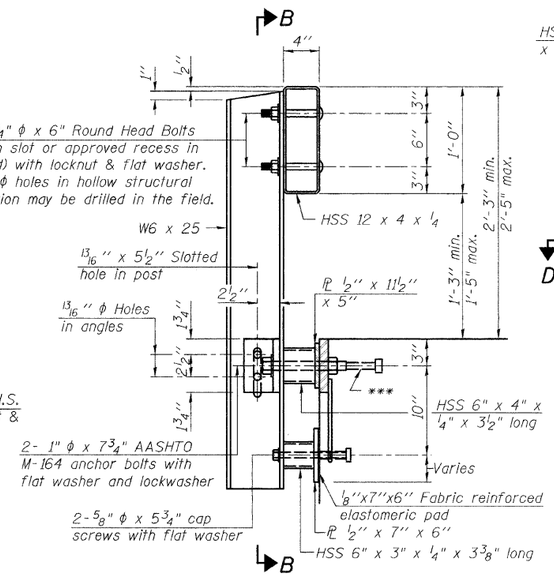

SECTION AT RAILING POST

** Whenever the lower insert assemblies interfere with strand locations, the #3 bars shall be cut and adjusted in order to allow raising or lowering of the lower inserts. Maximum adjustment not to exceed ½".

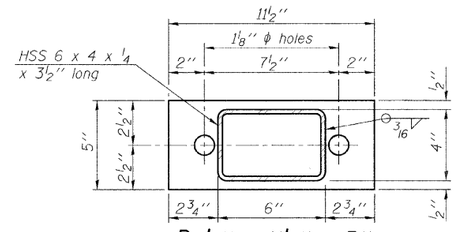

PL ½" x 11½" x 5"

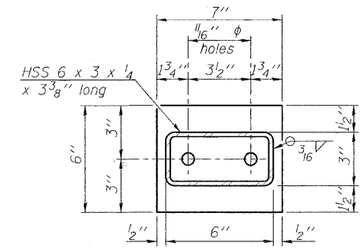

PL ½" x 7" x 6"

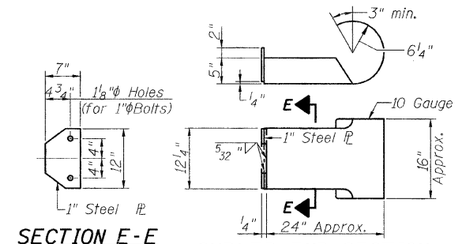

SECTION E-E

CURLED END SECTION DETAILS (4 Required)

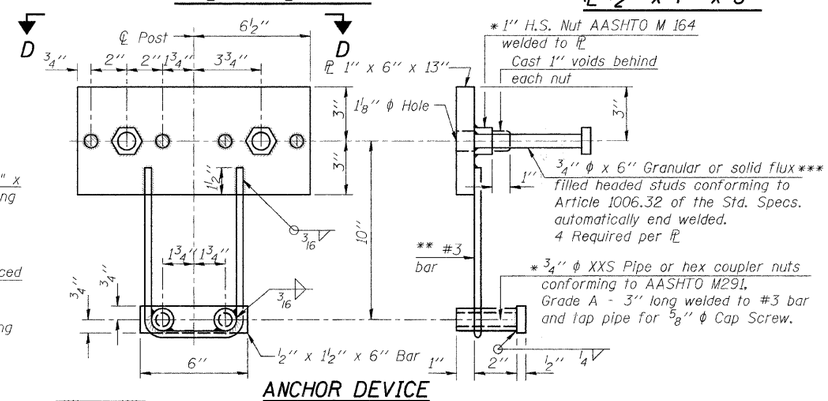

ANCHOR DEVICE

* Threaded areas shall be plugged or blocked off during casting of beam.

Notes:

All field drilled holes shall be coated with an approved zinc rich paint before erection.

For multi-span bridges, sufficient ¼" x 6" x 1'-2" galvanized steel shims shall be provided to align rail between adjacent spans. Cost included with Steel Railing, Type S-1.

All steel rail elements shall be galvanized according to Article 509.05 of the Standard Specifications.

*** The studs of the anchor devices shall be placed below the top reinforcement bars and the outermost longitudinal reinforcement bar shall be placed directly above the studs of the rail post anchor device.

Railing shall be in accordance with Section 509 of the Standard Specifications, except as noted, and will be paid for at the contract unit price per foot for Steel Railing, Type S-1.

The cost of curled end sections shall be included in the cost of Steel Railing, Type S1.

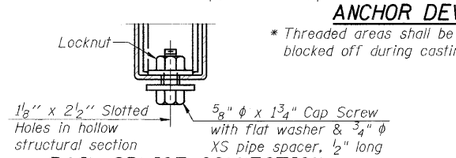

RAIL SPLICE CONNECTION AT EXPANSION JT.

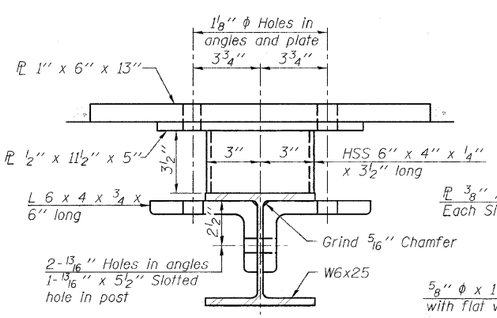

SECTION C-C

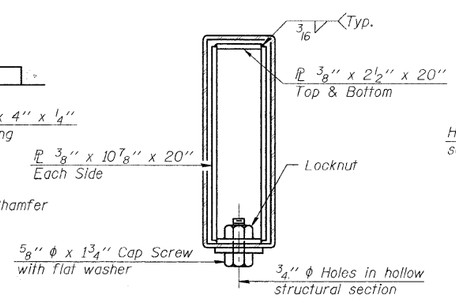

SECTIONS AT RAIL SPLICE

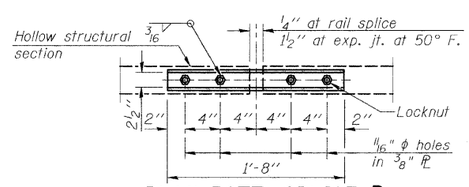

PLAN-BOTT. SPLICE PL TYPICAL

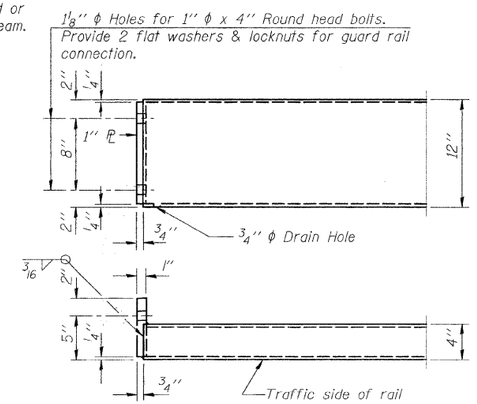

END OF RAIL DETAILS

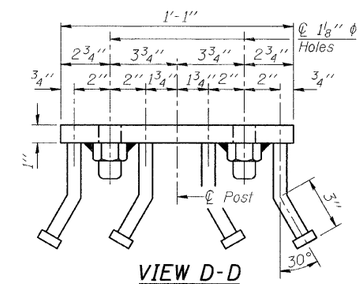

VIEW D-D

BILL OF MATERIAL

Item	Unit	Quantity
Steel Railing, Type S-1	Foot	128

FILE NAME =	USER NAME = $USER$	DESIGNED - F.L.L.	REVISED -
		DRAWN - M.J.S.	REVISED -
	PLOT SCALE = $SCALE$	CHECKED - M.A.H.	REVISED -
	PLOT DATE = $DATE$	DATE _____	REVISED -

Allen Henderson & Associates, Inc.
Civil and Structural Engineers Springfield, IL.
62703 Phone: (217)544-8033 IL. Design Firm No. 184-001907

RAILING

SCALE: NONE | SHEET NO. 7 OF 13 SHEETS | STA. 6+25.00 TO STA. 11+50.00

T.R. RTE.	SECTION	COUNTY	TOTAL SHEETS	SHEET NO.
336A	08-15131-00-BR	SHELBY	13	7
		CONTRACT NO. _____		
FED. ROAD DIST. NO. _	ILLINOIS	FED. AID PROJECT		