T.R. RTE.	SECTION	COUNTY	TOTAL SHEETS	SHEET NO.
336A	08-15131-00-BR	SHELBY	13	8
		CONTRACT NO. 95586		
FED. ROAD DIST. NO. _	ILLINOIS	FED. AID PROJECT		

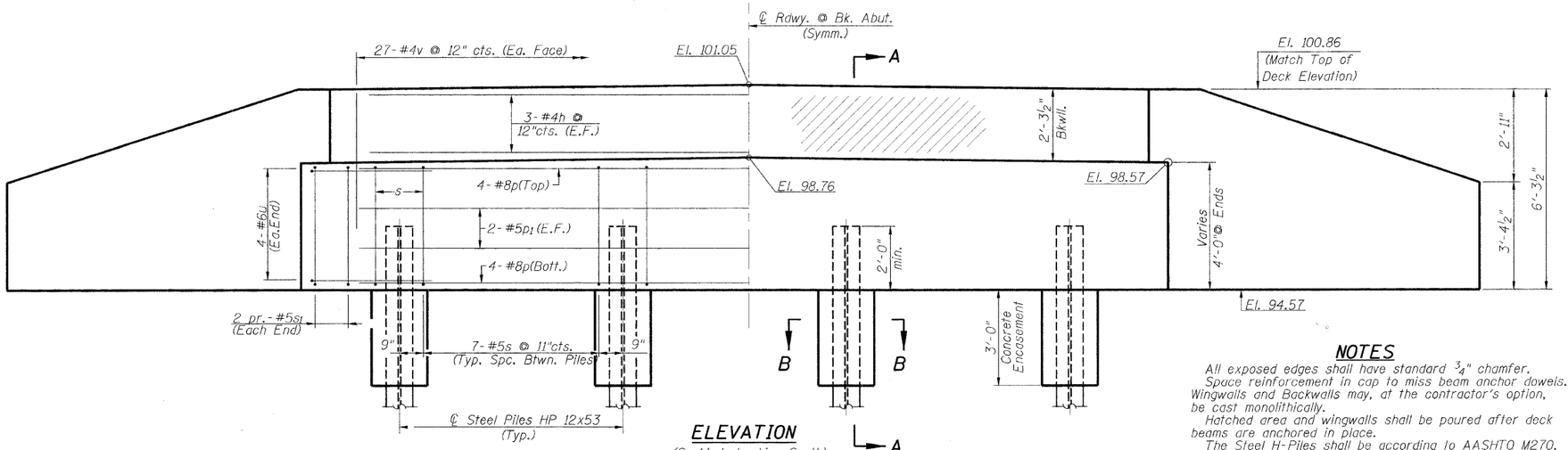

ELEVATION

(S. Abut. Looking South)
(N. Abut. Looking North)

NOTES

All exposed edges shall have standard ¾" chamfer.

Space reinforcement in cap to miss beam anchor dowels. Wingwalls and Backwalls may, at the contractor's option, be cast monolithically.

Hatched area and wingwalls shall be poured after deck beams are anchored in place.

The Steel H-Piles shall be according to AASHTO M270, Grade 50.

The Test Pile shall be driven to 110 percent of the Nominal Required Bearing indicated in the pile data information.

PILE DATA

	S. Abut.	N. Abut.
Pile Type & Size:	Steel HP 12x53	Steel HP 12x53
Nominal Required Bearing:	418 Kips	418 Kips
Factored Resistance Available:	209 Kips	209 Kips
Estimated Pile Length:	50'	66'
Number of Production:	3	3
Number of Test Piles:	1	1

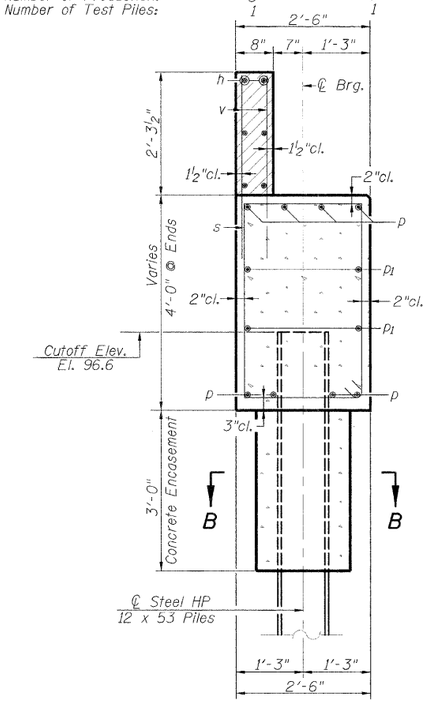

SECTION A-A

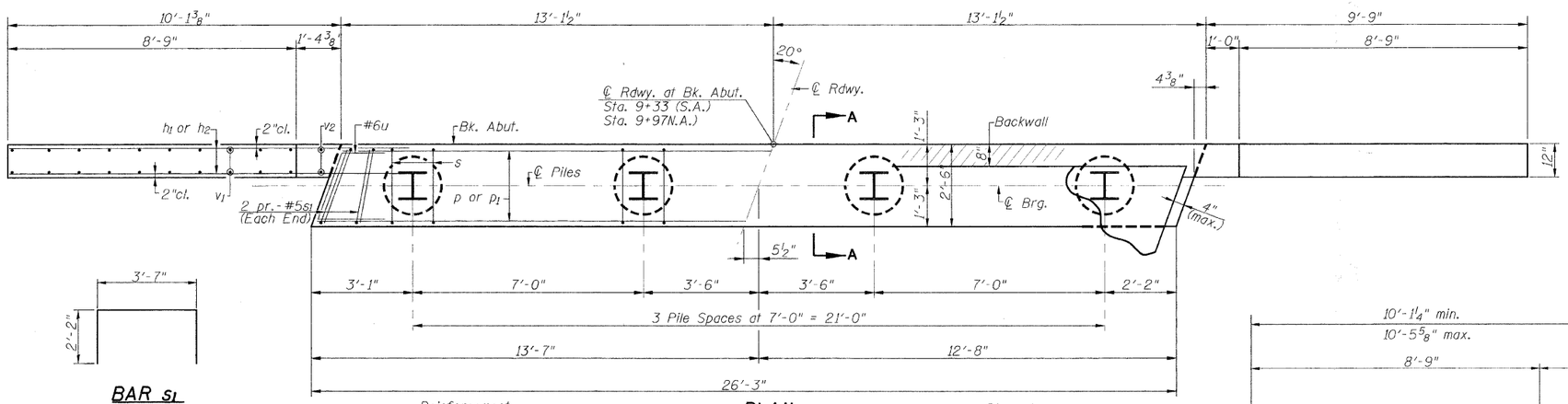

PLAN

BAR s1

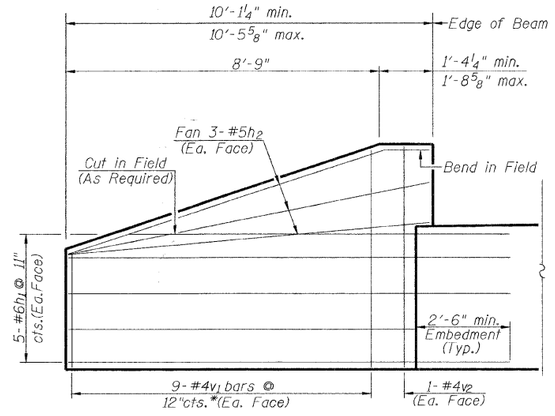

WINGWALL ELEVATION

(Showing Reinforcement)
* See v_1-bar cut diagram

TWO ABUTMENTS BILL OF MATERIAL

BAR	NO.	SIZE	LENGTH	SHAPE
h	12	#4	28'-3"	——
h1	40	#6	12'-6"	——
h2	24	#5	9'-5"	——
p	16	#8	25'-11"	——
p1	8	#5	25'-11"	——
s	46	#5	12'-5"	☐
s1	16	#5	7'-11"	⊓
u	16	#6	10'-3"	∠
v	108	#4	3'-9"	——
v1	36	#4	8'-11"	——
v2	8	#4	6'-0"	——
Concrete Structures			Cu. Yd.	30.4
Reinforcement Bars			Pound	4030
Furnishing Steel Piles HP 12x53			Foot	348
Driving Piles			Foot	348
Test Pile Steel HP 12x53			Each	2
Concrete Encasement			Cu. Yd.	2.8
Structure Excavation			Cu. Yd.	125

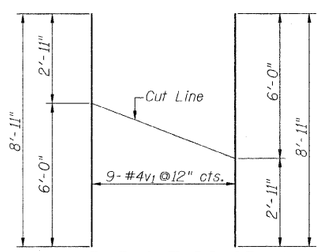

v_1 - BAR CUT DIAGRAM

Order v_1 bars full length: Layout in field according to diagram. Cut v_1 bars along cut line. Use remainder of each bar in opposite face.

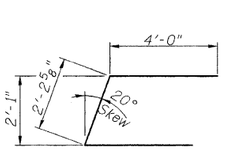

BAR u

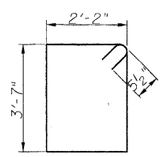

BAR s

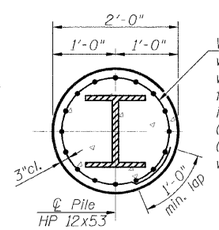

SECTION B-B

Welded Wire Fabric 6x6-W4.0-W4.0 weighing 58#/100 sq.ft. Cost included with Concrete Encasement. (Excavation for placement of Encasement shall be included with Concrete Encasement. (Extend W.W.F. 10" min. into cap). (Forms for Encasement may be omitted when soil conditions permit).

FILE NAME = $FILEL$	USER NAME = $USER$	DESIGNED - F.L.L.	REVISED - ___
		DRAWN - M.J.S.	REVISED - ___
	PLOT SCALE = $SCALE$	CHECKED - M.A.H.	REVISED - ___
	PLOT DATE = $DATE$	DATE - _____	REVISED - ___

Allen Henderson & Associates, Inc.
Civil and Structural Engineers Springfield, IL.
62703 Phone: (217)544-8033 IL. Design Firm No. 184-001907

ABUTMENTS

SCALE: NONE | SHEET NO. 8 OF 13 SHEETS | STA. 6+25.00 TO STA. 11+50.00

T.R. RTE.	SECTION	COUNTY	TOTAL SHEETS	SHEET NO.
336A	08-15131-00-BR	SHELBY	13	8
		CONTRACT NO. _____		
FED. ROAD DIST. NO. _	ILLINOIS	FED. AID PROJECT		