F.A.I. RTE.	SECTION	COUNTY	TOTAL SHEETS	SHEET NO.
55	*	WILL	608	159
STA.		TO STA.		
FED. ROAD DIST. NO. 1	ILLINOIS	FED. AID PROJECT		

* (26, 26HB-1&114) R-2 CONTRACT NO. 60363

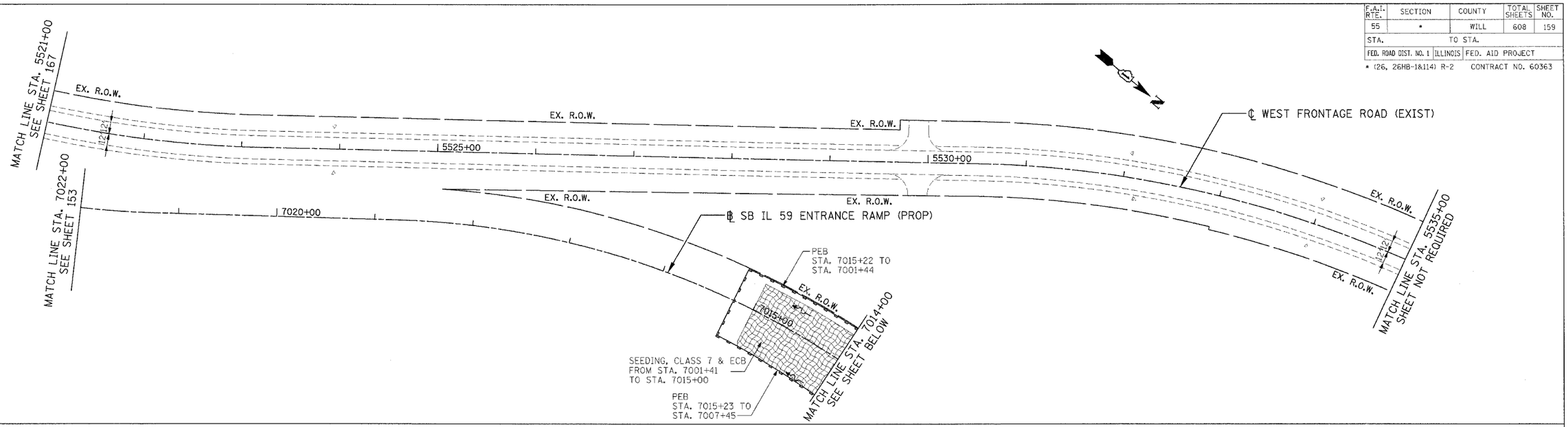

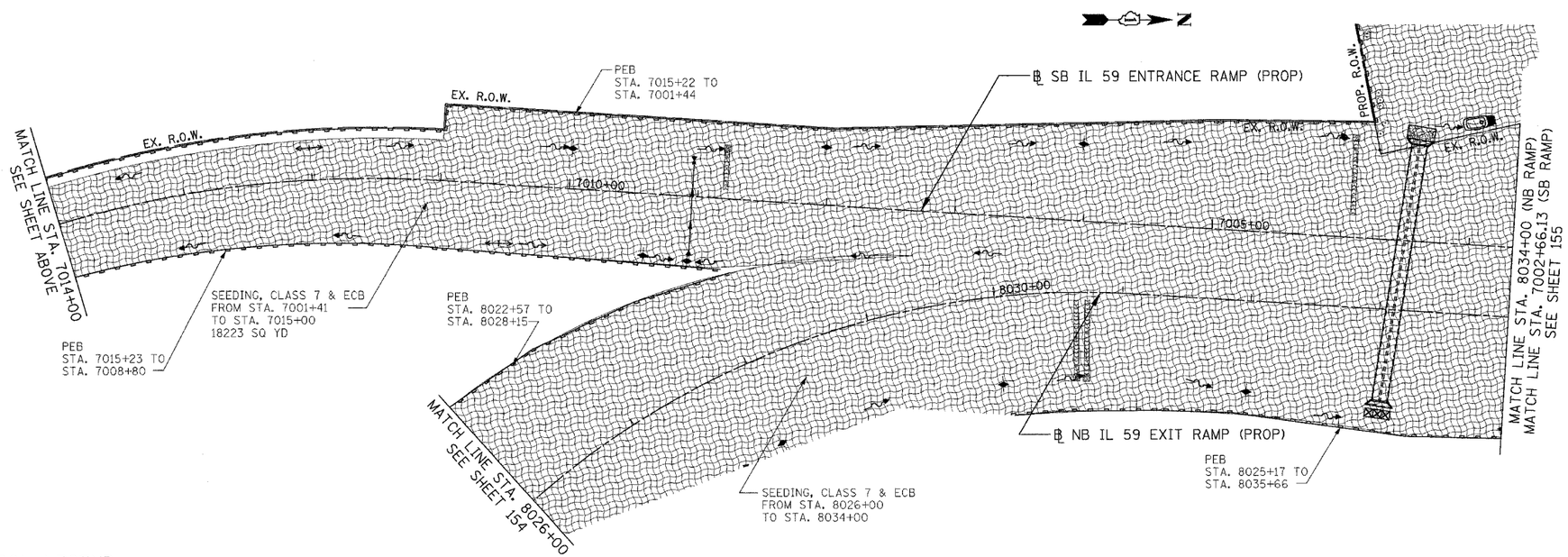

EROSION CONTROL LEGEND

- SEDIMENT BASIN
- SEDIMENT CONTROL, DRAINAGE STRUCTURE INLET FILTER
- REINFORCED INLET PROTECTION
- PERIMETER EROSION BARRIER (PEB)
- TEMPORARY EROSION CONTROL SEEDING AND EROSION CONTROL BLANKET (TERC ECB) SEEDING, CLASS 7 OVER WINTER STAGE
- MULCH METHOD 2 AND TEMPORARY EROSION CONTROL SEEDING (MM2 & TERC)
- EXISTING TEMPORARY EROSION CONTROL SEEDING AND EROSION CONTROL BLANKET (TERC ECB)
- STRUCTURE REMOVAL
- AGGREGATE (EROSION CONTROL)
- TEMP PIPE SLOPE DRAIN
- TEMPORARY DITCH CHECK
- TEMPORARY PIPE REMOVAL
- TEMPORARY PAVEMENT, UNLESS OTHERWISE NOTED
- PAVEMENT REMOVAL, UNLESS OTHERWISE NOTED

NOTES:

1. FOR PERMANENT DRAINAGE STRUCTURE AND PIPE INFORMATION SEE SHEETS 216 TO 221
2. PER STANDARD 2800001, ALL SEDIMENT BASINS TO BE PLACED AS SHOWN AND REMOVED AT THE END OF THE PROJECT. THE COST WILL BE INCLUDED IN THE CONTRACT UNIT PRICE BID PER CUBIC YARD FOR "EARTH EXCAVATION FOR EROSION CONTROL".
3. AGGREGATE EROSION CONTROL IS NOT REQUIRED FOR SEDIMENT BASINS WHERE THESE DISCHARGE TO STONE RIPRAP.
4. LATERAL SEWER PIPE TO MAINLINE SEWER SHALL HAVE THEIR UPSTREAM ENDS TEMPORARILY PLUGGED ACCORDING TO DETAILS OF SHEET 410, OR AS DIRECTED BY THE ENGINEER. PLUG WILL BE REMOVED UPON CONSTRUCTION OF REMAINING LATERAL PIPE, AS DIRECTED BY THE ENGINEER. COST OF TEMPORARY PLUG AND SUBSEQUENT REMOVAL FOR LATERAL STORM SEWER CONNECTIONS WILL NOT BE PAID FOR SEPARATELY, BUT WILL BE INCLUDED IN THE CONTRACT UNIT PRICE BID PER FOOT FOR STORM SEWERS, OF THE CLASS AND TYPE SPECIFIED.

REVISIONS	
NAME	DATE

ILLINOIS DEPARTMENT OF TRANSPORTATION
FAI 55 AT FAP 338 ILLINOIS ROUTE 59
SECTION: (26, 26HB-1&114) R-2

EROSION CONTROL PRE STAGE A STA. 7002+66 TO STA. 7022+00

SCALE: 1" = 50' DRAWN BY: MRK
DATE: 03/14/08 CHECKED BY: TKL

TENG

TENG & ASSOCIATES, INC.
ENGINEERS•ARCHITECTS•PLANNERS
360 N. MICHIGAN AVE CHICAGO, IL 60601
TELEPHONE: 312/616-0900

N:\LI700HWLDGN, N:\SUROORVLDGN, N:\EXHOORLDGN, N:\SUROOPSVLDGN, N:\TPOOGRCPJDGN, N:\NOWOORGHLDGN, N:\TTBOORKNLDGN, N:\ROWOOSOOLDGN, N:\ROWOORONLDGN,
N:\LI700HWLDGN, N:\SUROOPSVLDGN, N:\TPOOGRCPJDGN, N:\NOWOORGHLDGN, N:\TTBOORKNLDGN, N:\ROWOOSOOLDGN, N:\ROWOORONLDGN, N:\EXHOORLDGN, N:\SUROORLDGN, N:\SUROOPSVLDGN,
7:14:2008 09:20:04 T:\DOCUMENT\330700\Cra\WORKGROUP\LDGN BONDHLUO
1 2 3 4 5 6 7 8 9 10 11 12 13 14 15 16 17 18 19 20 21 22 23 24 25 26 27 28 29 30 31 32 33 34 35 36 37 38 39 40 41 42 43 44 45 46 47 48 49 50 51 52 53 54 55 56 57 58 59 60 61 62