F.A.I. RTE.	SECTION	COUNTY	TOTAL SHEETS	SHEET NO.
55	*	WILL	608	412
STA.		TO STA.		
FED. ROAD DIST. NO. 1	ILLINOIS	FED. AID PROJECT		

* (26, 26HB-1&114) R-2 CONTRACT NO. 60363

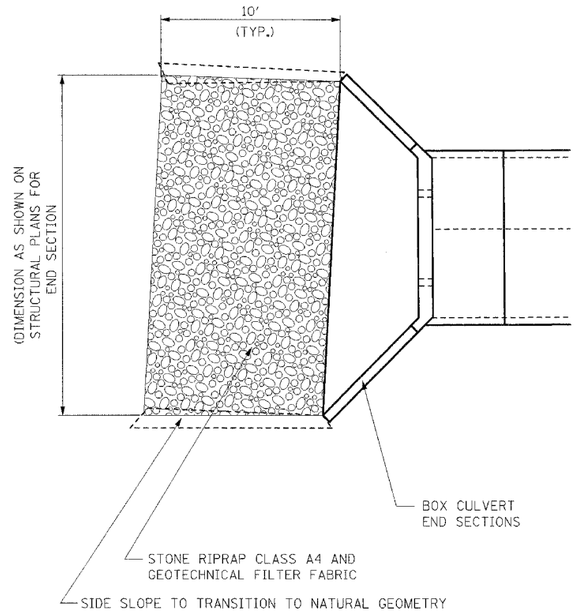

PLAN VIEW

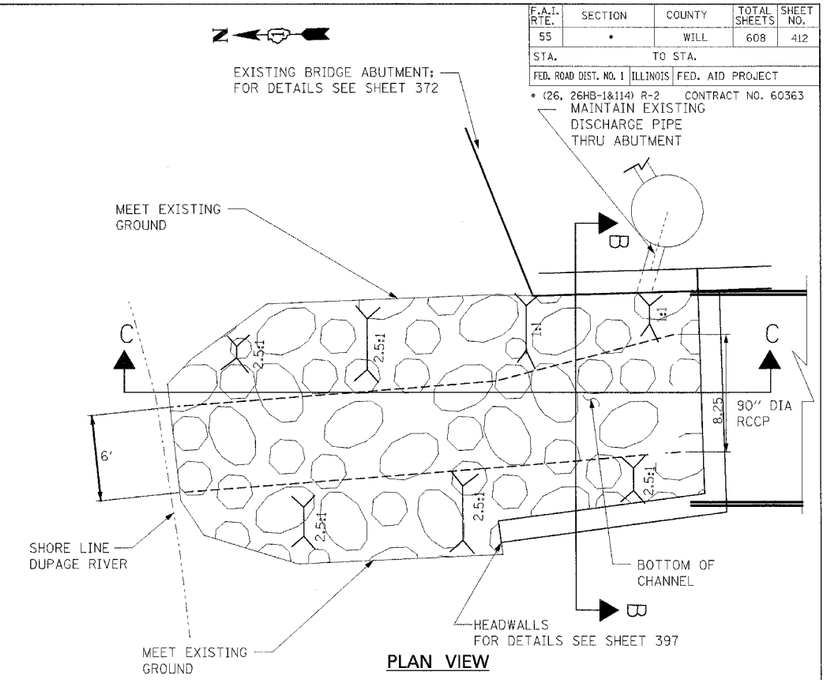

PLAN VIEW

RIPRAP APRON AT BOX CULVERT END SECTIONS
N.T.S.

NOTE: ALL DIMENSIONS IN FEET UNLESS OTHERWISE NOTED.

NOTES:

1. GEOTECHNICAL FILTER FABRIC WILL BE PAID FOR AT THE CONTRACT UNIT PRICE BID PER SQUARE YARD FOR "FILTER FABRIC".

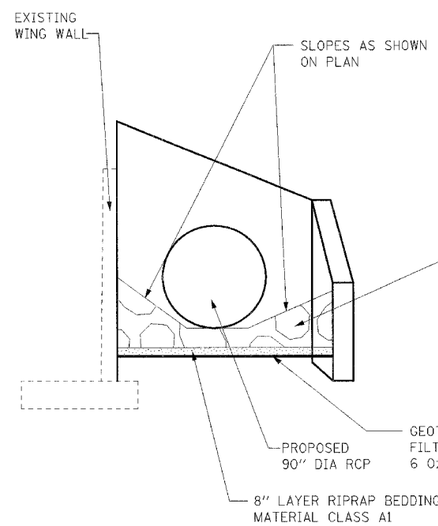

SECTION B-B

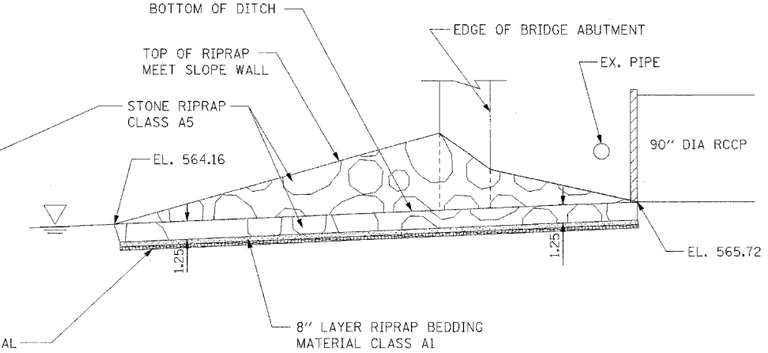

SECTION C-C
IL-59
STATION 7522+00, 44' LT

RIPRAP DETAIL
N.T.S.

NOTE: ALL DIMENSIONS IN FEET UNLESS OTHERWISE NOTED.

NOTES:

1. GEOTECHNICAL FILTER FABRIC WILL BE PAID FOR AT THE CONTRACT UNIT PRICE BID PER SQUARE YARD FOR "FILTER FABRIC".

REVISIONS	
NAME	DATE

ILLINOIS DEPARTMENT OF TRANSPORTATION
FAI 55 AT FAP 338 ILLINOIS ROUTE 59
SECTION: (26, 26HB-1&114) R-2

DRAINAGE DETAILS III

SCALE: N.T.S. DRAWN BY: MRK
DATE: 03/14/08 CHECKED BY: TKL

TENG
TENG & ASSOCIATES, INC.
ENGINEERS/ARCHITECTS/PLANNERS
202 N. MICHIGAN AVE. CHICAGO, IL 60601
TELEPHONE: 312/616-0300

..\TTBOORKN.DGN ..\DETOOSHO.DGN ..\DRAO08PO.DGN ..\SSUROBRL1.DGN ..\DRAO08FO.DGN ..\GPEOOBUR.DGN ..\TSLOOBZW.DGN ..\GPSOOBUR.DGN ..\TSLOOBZP.DGN ..\HDWOOBOH.DGN
3-12-2008 16:18:57 T:\DOCUMENT\43279\DWG\DGN\DRD0052.DGN BONDHLUO
1 2 3 4 5 6 7 8 9 10 11 12 13 14 15 16 17 18 19 20 21 22 23 24 25 26 27 28 29 30 31 32 33 34 35 36 37 38 39 40 41 42 43 44 45 46 47 48 49 50 51 52 53 54 55 57 58 59 60 61 62 63