F.A.I. RTE.	SECTION	COUNTY	TOTAL SHEETS	SHEET NO.
55	*	WILL	608	419
STA.		TO STA.		
FED. ROAD DIST. NO. 1	ILLINOIS	FED. AID PROJECT		

* (26, 26HB-1&114) R-2 CONTRACT NO. 60363

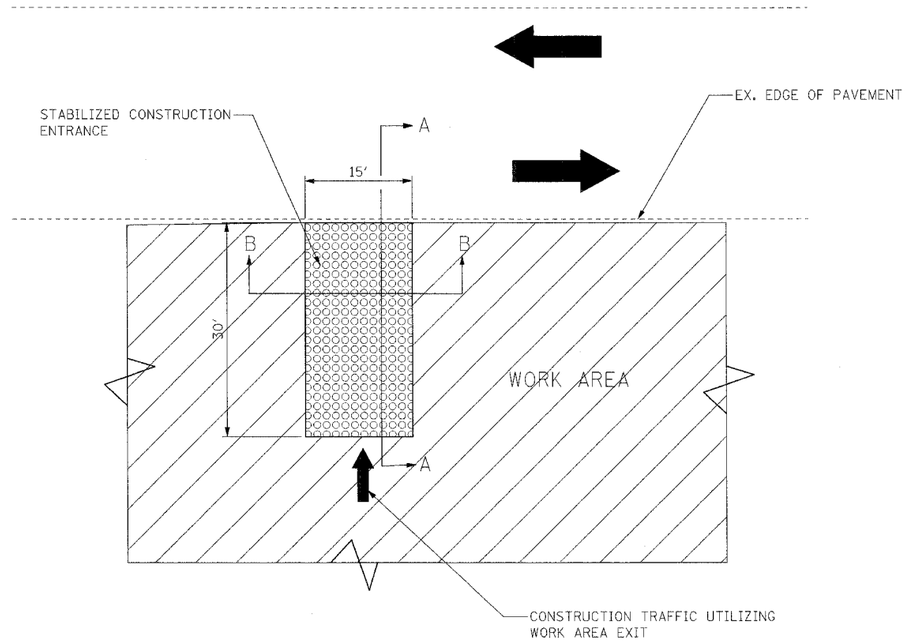

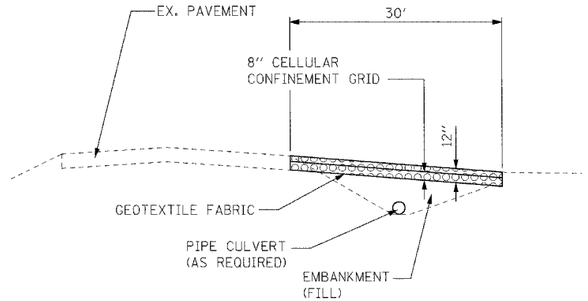

SECTION A-A

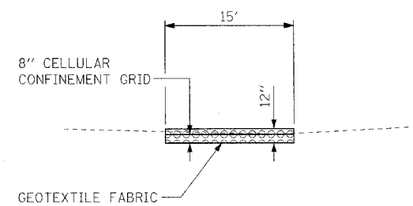

SECTION B-B

STABILIZED CONSTRUCTION ENTRANCE

NOTES:

1. EXISTING DITCH DRAINAGE TO BE MAINTAINED. THE COST OF PIPE CULVERTS USED TO MAINTAIN EXISTING DITCH DRAINAGE WILL NOT BE PAID SEPARATELY, BUT SHALL BE INCLUDED IN THE CONTRACT UNIT PRICE OF STABILIZED CONSTRUCTION ENTRANCE.

2. STABILIZED CONSTRUCTION ENTRANCE DIMENSIONS SHALL BE APPROVED BY THE ENGINEER.

REVISIONS	
NAME	DATE

ILLINOIS DEPARTMENT OF TRANSPORTATION
FAI 55 AT FAP 338 ILLINOIS ROUTE 59
SECTION: (26, 26HB-1&114) R-2

EROSION CONTROL DETAILS SEDIMENT CONTROL, STABILIZED CONSTRUCTION ENTRANCE

SCALE: DRAWN BY: MRK

DATE: 03/14/08 CHECKED BY: TKL

TENG

TENG & ASSOCIATES, INC.
ENGINEERS/ARCHITECTS/PLANNERS
300 N. MICHIGAN AVE. CHICAGO, IL 60601
TELEPHONE: 312/616-0300

BONGHUJO
T:\DOCUMENT\1932790\CIVIL\DGN\ER0004SE.DGN
=>TEMPORARY\DGN
=>7-2-2008 8:36:40