F.A. RTE.	SECTION	COUNTY	TOTAL SHEETS	SHEET NO.
	03-00052-00-PV	LAKE	78	6
STA.		TO STA.		
FED. ROAD DIST. NO.	ILLINOIS	FED. AID PROJECT		

CONTRACT NUMBER 63002

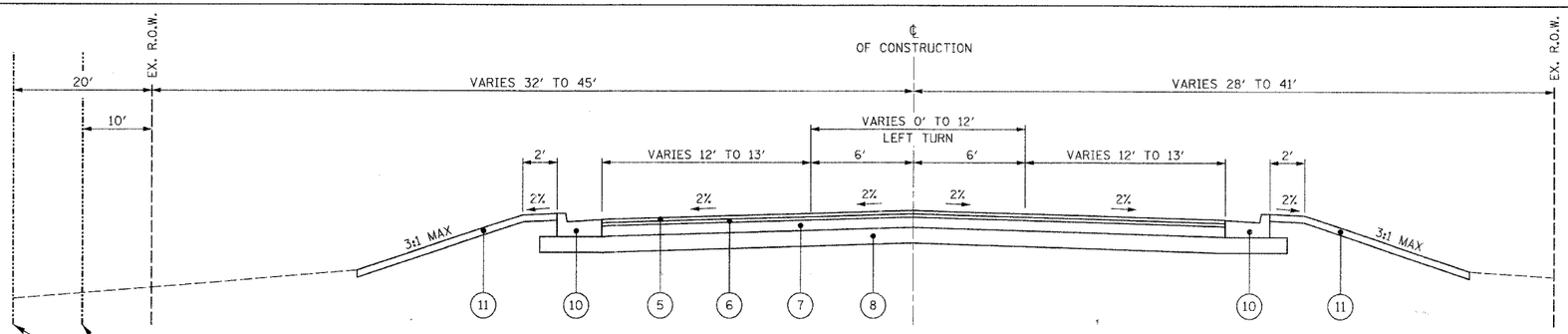

PROPOSED SHOREWOOD ROAD

STA. 16+35.40 TO STA. 21+92.50
STA. 24+61.10 TO STA. 36+42.42
✱STA. 44+21.49 TO STA. 51+00.15
✱STA. 58+83.05 TO STA. 72+81.00

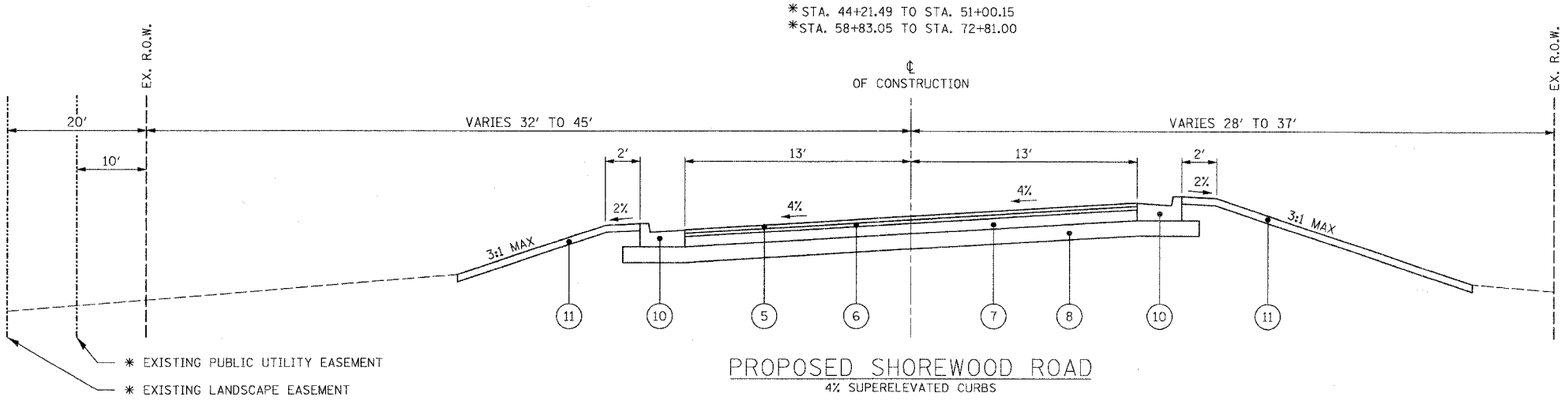

PROPOSED SHOREWOOD ROAD

4% SUPERELEVATED CURBS

CURVE #1
TRANSITION L_A (LT) STA. 18+52.28 TO STA. 18+97.28
TRANSITION L_A (RT) STA. 17+62.28 TO STA. 18+97.28
4% SUPERELEVATION STA. 18+97.25 TO STA. 19+71.88
TRANSITION L_B (LT) STA. 19+71.88 TO STA. 20+16.88
TRANSITION L_B (RT) STA. 19+71.88 TO STA. 21+06.88

✱ CURVE #2
TRANSITION L_A (LT) STA. 54+61.22 TO STA. 55+06.22
TRANSITION L_A (RT) STA. 53+71.22 TO STA. 55+06.22
4% SUPERELEVATION STA. 55+06.22 TO STA. 57+87.12
TRANSITION L_B (LT) STA. 57+87.12 TO STA. 58+32.12
TRANSITION L_B (RT) STA. 57+87.12 TO STA. 59+22.12

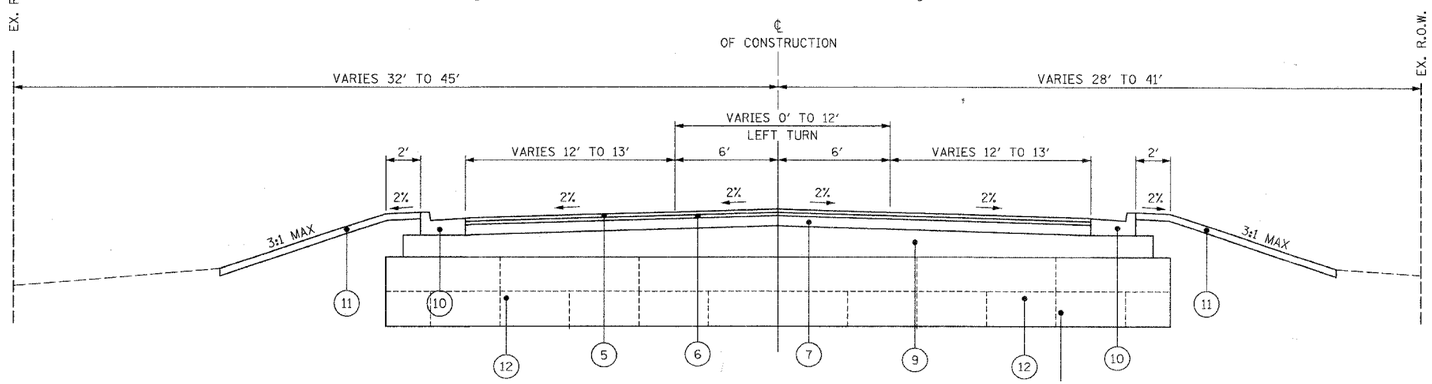

PROPOSED SHOREWOOD ROAD

SUBGRADE REMEDIAL TREATMENT

STA. 20+25 TO STA. 22+50

LEGEND

1. EXIST. BITUMINOUS PAVEMENT +/- 6"
2. EXIST. SUB-BASE +/- 6"
3. EXIST. AGGREGATE SHOULDER
4. EXIST. BITUMINOUS PATH
5. HMA SURF. CRSE., MIX "C", N50, 2"
6. HMA BINDER CRSE., IL-19.0, N50, 2 1/4"
7. HMA BASE CRSE., 8"

→ HOT-MIX ASPHALT PAVEMENT, (FULL-DEPTH), 12 1/4"

8. PROP. AGGREGATE SUBGRADE, 12"
9. PROP. AGGREGATE BASE COURSE, TYPE B, 14"
10. PROP. COMBINATION CONCRETE CURB & GUTTER, B-6.24
11. PROP. SODDING, SALT TOLERANT
    PROP. SEEDING, CLASS 2A
    PROP. SEEDING, CLASS 4A
    PROP. SEEDING, CLASS 4B
    TOPSOIL FURNISH AND PLACE, 4"
12. PROP. EXPANDED POLYSTYRENE (EPS) EMBANKMENT FILL, 48"
13. HMA SHOULDER, 3"

EXIST. PAVEMENT STRUCTURE TO BE REMOVED

ANTICIPATED SUBGRADE REMEDIAL TREATMENT

TREATMENT	DEPTH	LIMITS
PROP. POROUS GRANULAR EMBANKMENT, SUBGRADE	12"	STA. 35+50 TO STA. 38+50
PROP. EXPANDED POLYSTYRENE (EPS) EMBANKMENT	48"	STA. 20+25 TO STA. 22+50

NOTE: POROUS GRANULAR EMBANKMENT, SUBGRADE (PGES) HAS BEEN PROVIDED FOR USE AT THE LOCATIONS INDICATED FOR SOILS THAT TEND TO BE UNSUITABLE OR UNSTABLE. THE ACTUAL NEED FOR REMOVAL AND REPLACEMENT WITH PGES WILL BE DETERMINED IN THE FIELD AT THE TIME OF CONSTRUCTION BY THE GEOTECHNICAL ENGINEER. ALL POTENTIALLY UNSTABLE SOILS SHOULD BE TESTED WITH A STATIC CONE PENETROMETER AND TREATED IN ACCORDANCE WITH ARTICLE 301.03 AND THE UNDERCUT GUIDELINES IN THE IDOT SUBGRADE STABILITY MANUAL. IF UNSTABLE AND/OR UNSUITABLE MATERIAL IS ENCOUNTERED, THE SOIL SHALL BE REMOVED AND REPLACED WITH PGES OR EMBANKMENT AS DETERMINED BY THE GEOTECHNICAL ENGINEER. IF UNSTABLE AND/OR UNSUITABLE MATERIAL IS NOT ENCOUNTERED, THEN THE QUANTITY SHALL BE DEDUCTED AND NO ADDITIONAL COMPENSATION WILL BE DUE TO THE CONTRACTOR.

PLAN	BY	DATE
SURVEYED		
PLOTTED		
ALIGNMENT CHECKED		
RT OF WAY CHECKED		
CADD FILE NAME		
NOTE BOOK NO.		

PROFILE	BY	DATE
SURVEYED		
PLOTTED		
GRADES CHECKED		
RT OF WAY CHECKED		
STRUCTURE NO(S)/PN CHKD		
NOTE BOOK NO.		

REVISIONS	
NAME	DATE

VILLAGE OF GRAYSLAKE

SHOREWOOD ROAD
IL ROUTE 83 TO ROLLINS ROAD

TYPICAL SECTIONS

SCALE:

DATE: 11/06/07

DESIGNED BY: MTK
DRAWN BY: MTK/BB/GP
CHECKED BY: RPI