STATE OF ILLINOIS
DEPARTMENT OF TRANSPORTATION

ROUTE NO.	SECTION	COUNTY	TOTAL SHEETS	SHEET NO.
F.A.S. 1832	5BR-2	WASHINGTON	97	76
FED. ROAD DIST. NO. 7		ILLINOIS	FED. AID PROJECT-	

SHEET NO. 6
12 SHEETS

Contract #76949

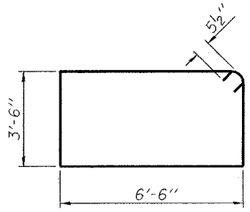

BAR s(E)

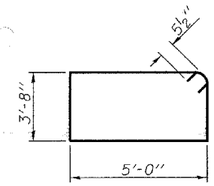

BAR s_1(E)

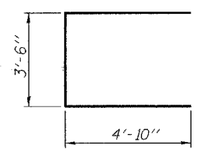

BAR u(E)

MIN. BAR LAP
#5 Bar - 2'-2"

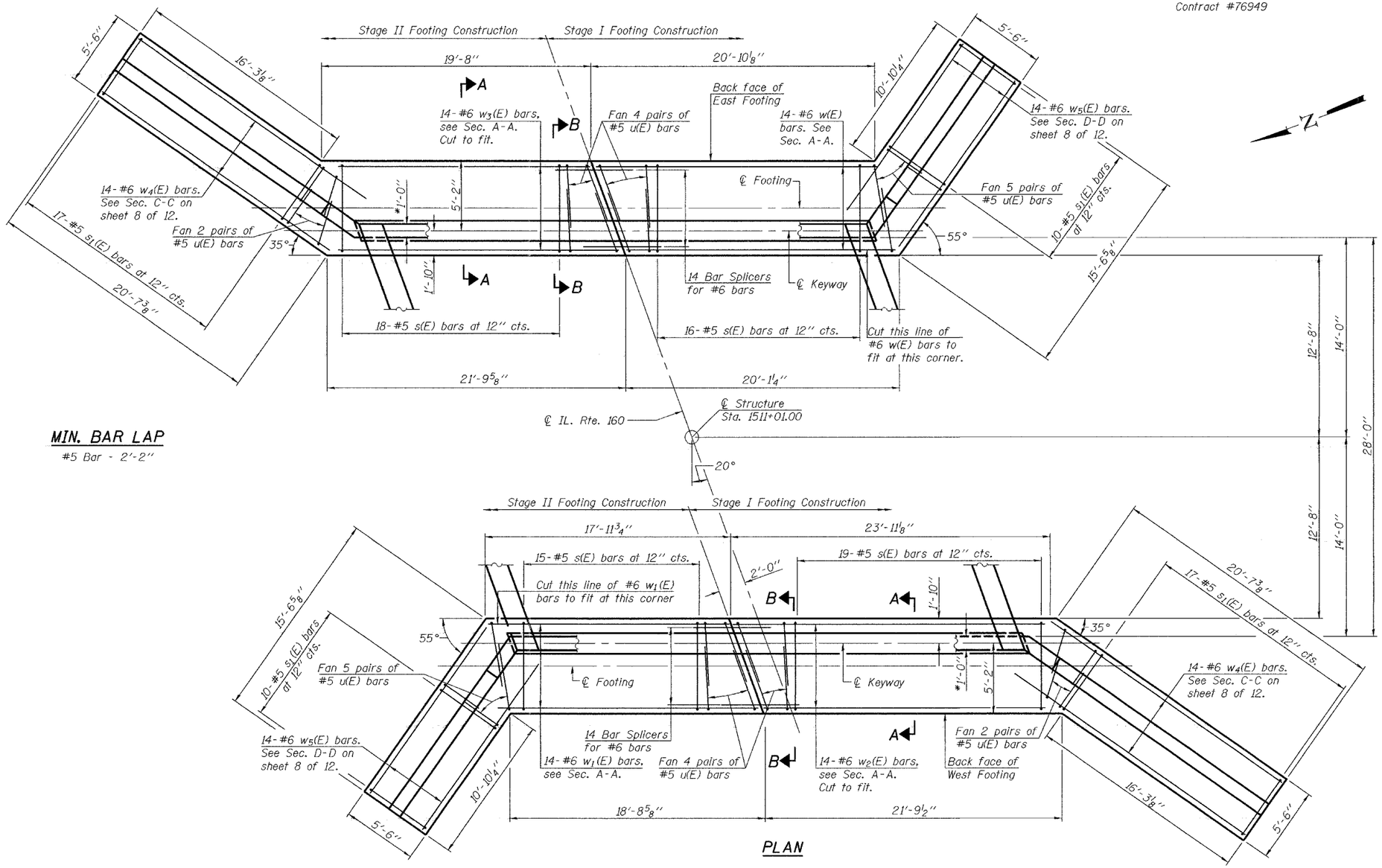

PLAN

Notes:
For Section A-A and Section B-B, see sheet 7 of 12.
Minimum spacing between pairs of 4-#5 u(E) bars shall be 2½".

*Slab and wall thickness and shape may vary as per manufacturer's design.

BILL OF MATERIAL

Structure Footing and Wingwall Footings

Bar	No.	Size	Length	Shape
s(E)	68	#5	20'-11"	
s_1(E)	54	#5	18'-3"	
w(E)	14	#6	20'-6"	
w_1(E)	14	#6	18'-5"	
w_2(E)	14	#6	23'-7"	
w_3(E)	14	#6	21'-5"	
w_4(E)	28	#6	20'-3"	
w_5(E)	28	#6	15'-3"	
u(E)	60	#5	13'-2"	
Concrete Structures			Cu. Yd.	145
Reinforcement Bars, Epoxy Coated			Pound	6590
Structure Excavation			Cu. Yd.	365

DESIGNED	Nicholas R. Barnett
CHECKED	Ray Ahanchi
DRAWN	Gregory D. Farmer
CHECKED	NRB/GRA

January 28 2008
EXAMINED Thomas J. Domagalski
ENGINEER OF BRIDGE DESIGN
PASSED Ralph E. Anderson
ENGINEER OF BRIDGES AND STRUCTURES

FOOTING DETAILS
F.A.S. RTE. 1832 - SECT. 5BR-2
WASHINGTON COUNTY
STATION 1511+01.00
STRUCTURE NO. 095-0078