MANHOLE BOX-OUT

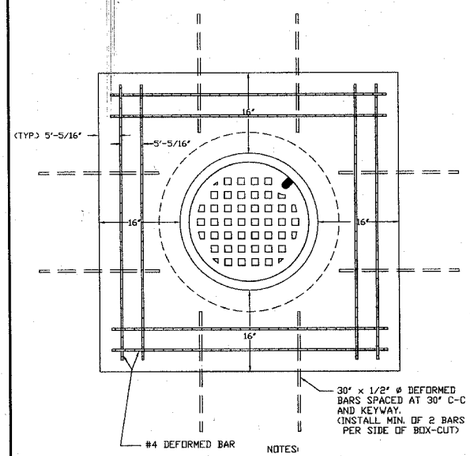

NOTES:

#1 REBARS TO BE PLACED WHETHER BOX-OUT IS USED OR NOT.

#2 MINIMUM OF 2' CLEARANCE BETWEEN BOX-OUT AND END OF REBARS.

REVISED	TAB	03/14/2000
STAND305.DWG	CVE	06/24/96
REVISION	BY	DATE

SLEEVE - WATER SERVICE BOX

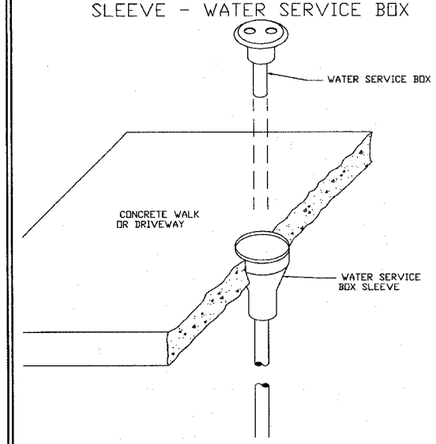

MANHOLE BOX-OUT & WATER SERVICE BOX SLEEVE

CITY OF ROCK ISLAND ENGINEERING DIVISION | STANDARD NO. 305

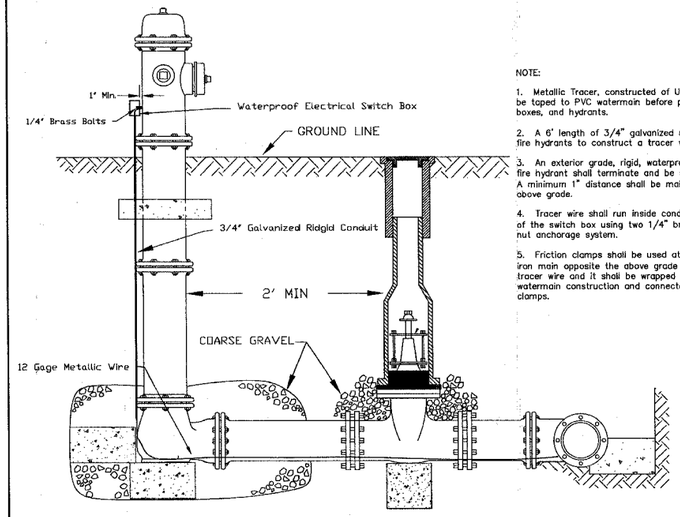

NOTE:

1. Metallic Tracer, constructed of USE 12 gage metallic wire with blue insulation shall be taped to PVC watermain before placement. The tracer shall be connected to all valve boxes, and hydrants.

2. A 6' length of 3/4" galvanized rigid conduit shall be secured to all proposed fire hydrants to construct a tracer wire housing.

3. An exterior grade, rigid, waterproof electrical switch box of same color as the fire hydrant shall terminate and be secured to the conduit below the hydrant nozzle. A minimum 1" distance shall be maintained between the fire hydrant and switch box above grade.

4. Tracer wire shall run inside conduit and shall be connected to the side wall of the switch box using two 1/4" brass bolts secured to the switch box using triple nut anchorage system.

5. Friction clamps shall be used at both terminating ends of the tracer wire at the ductile iron main opposite the above grade switch box. Insulation shall be removed from 12" of the tracer wire and it shall be wrapped around the watermain at the terminating point for watermain construction and connected directly to the watermain using the friction clamps.

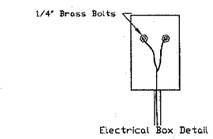

NOT TO SCALE

STAND308.DWG	CAM	04/03/02
REVISION	BY	DATE

S:\...\MISC\STANDARD\CRI_STD\308.DWG

Watermain Tracer Wire Detail

CITY OF ROCK ISLAND ENGINEERING DIVISION | STANDARD NO. 308

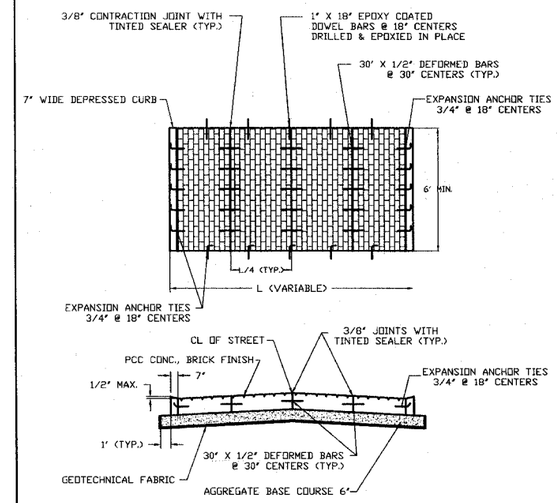

PCC PAVEMENT, TEXTURED, COLORED

TRENCH DETAIL FOR ALL EXCAVATIONS UNDER OR WITHIN TWO FEET OF A PROPOSED OR EXISTING PAVEMENT

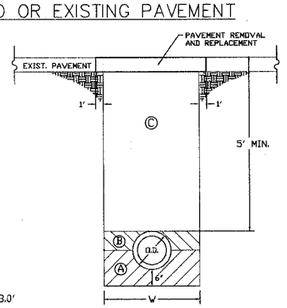

AREA (A) FA-1 OR FA-2 BEDDING COMPACTED IN 8" LIFTS ACCORDING TO ART. 550.07

AREA (B) TRENCH BACKFILL (PAY ITEM) COMPACTED IN 8" LIFTS ACCORDING TO ART. 550.07

AREA (C) TRENCH BACKFILL (PAY ITEM). COMPACTED BY METHOD 1, 2, OR 3 ART. 550.07.

BEDDING, BACKFILLING AND COMPACTING AREA A ARE INCIDENTAL TO THE WATERMAIN CONSTRUCTION.

REVISED	MDW	08/22/94
STANDARDIZED	MCE	06/28/94
REVISION	BY	DATE

TRENCH DETAIL FOR EXCAVATIONS OUTSIDE PAVED AREAS

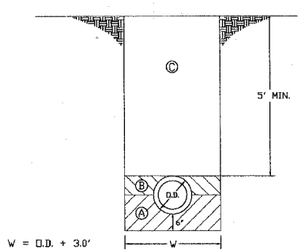

AREA (A) FA-1 OR FA-2 BEDDING COMPACTED IN 8" LIFTS ACCORDING TO ART. 550.07

AREA (B) SELECT MATERIAL - NATIVE SOIL EXCAVATED FROM THE TRENCH, FREE OF ROCKS, FOREIGN MATERIALS, AND FROZEN EARTH. COMPACTED IN 8" LIFTS ACCORDING TO ART. 550.07

AREA (C) EXCAVATED MATERIAL FREE OF ROCKS LARGER THAN 8" IN GREATEST DIMENSION COMPACTED BY METHOD 1, 2, OR 3 ART. 550.07

BEDDING, BACKFILLING AND COMPACTING AREAS A ,B, AND C ARE INCIDENTAL TO THE WATERMAIN CONSTRUCTION.

TRENCH DETAILS FOR WATERMAIN INSTALLATION

CITY OF ROCK ISLAND ENGINEERING DIVISION | STANDARD NO. 306

NOTE: Water mains 8" or less shall have a minimum of one 2" pipe at downstream end for adequate flow for flushing. Water mains that are greater than 8" shall have two 2" pipes to provide for adequate flow for flushing. All material and labor required to provide for adequate flushing of new water main shall be incidental to the cost of the water main. Excavation sites shall be backfilled during testing period.

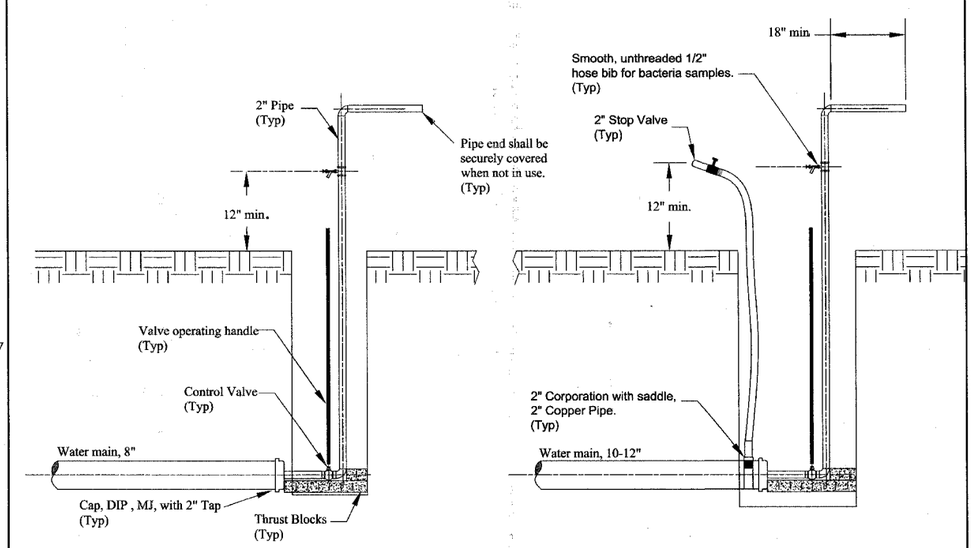

NOT TO SCALE

STAND309.DWG	WLC	02/03/06
REVISION	BY	DATE

S:\...\MISC\STANDARD\CRI_STD\309.DWG

Watermain Blowoff and Sample Tap

CITY OF ROCK ISLAND ENGINEERING DIVISION | STANDARD NO. 309

85434

06-00180-00-RS

C.R.I. STANDARD DETAILS

CITY OF ROCK ISLAND
ENGINEERING DIVISION

24th Street Resurfacing

18th to 25th Avenue

Job Number 2569	ROCK ISLAND ILLINOIS	Date 3-07-08 By mdw
Computer Drawing Name 2569 Standard Details		Sheet 37 Of 38