ROUTE NO.	SECTION	COUNTY	TOTAL SHEETS	SHEET NO.
CS #900	05-00205 -00-BR	MACON	23	21
FED. ROAD DIST. NO.	ILLINOIS	PROJECT: BRM-5169(40)		

CONTRACT NO. 95542

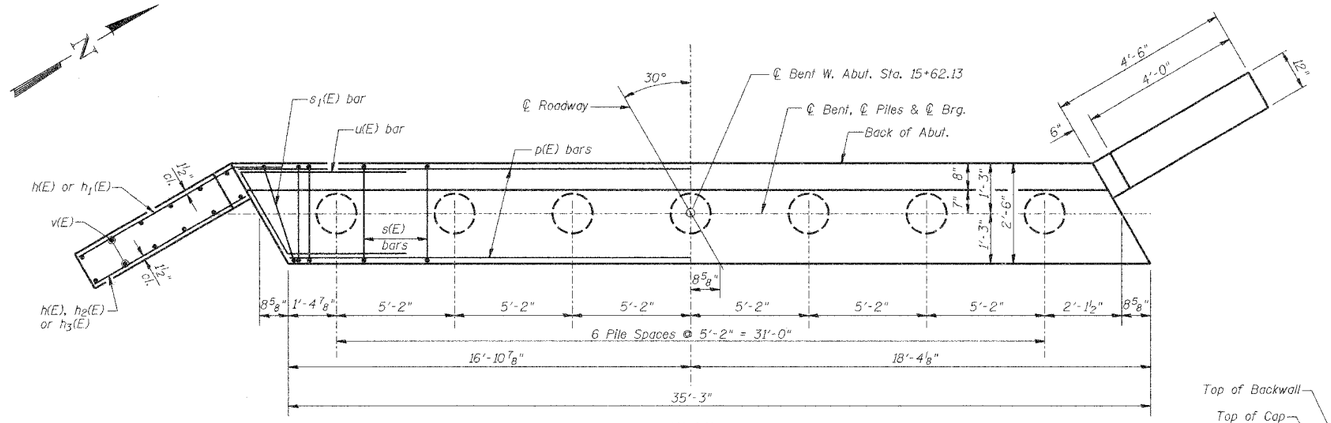

PLAN

PILE DATA

Type & Size: Metal Shell - 14 in. dia. x 0.25 in. walls
Nominal Required Bearing: 228 Kips
Allowable Resistance Available: 76 Kips
Est. Length: 34'-0"
No. Required: 7

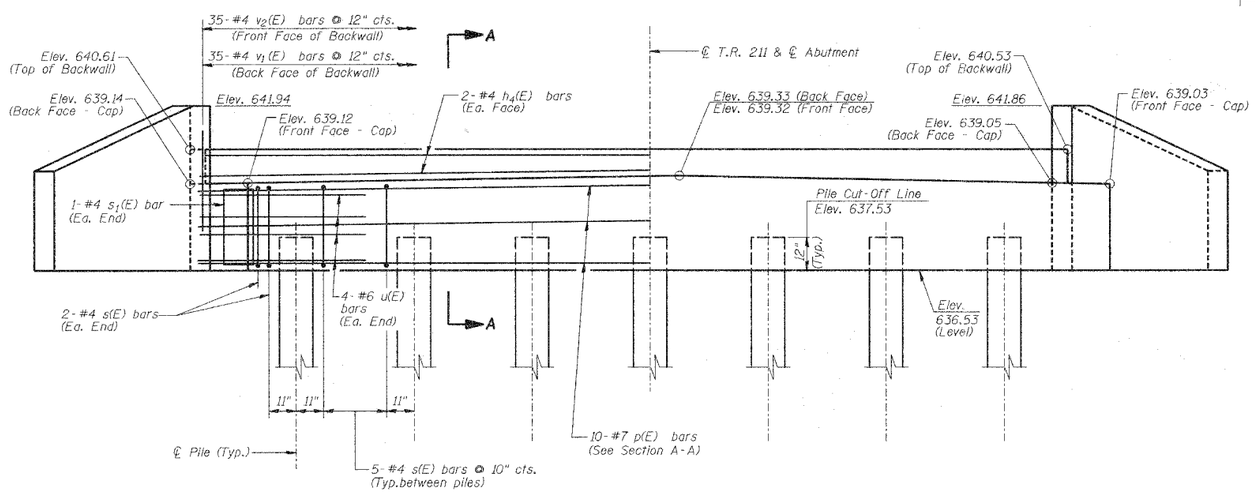

ELEVATION

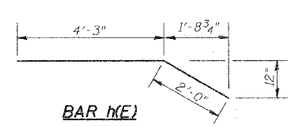

BAR h(E)

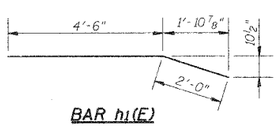

BAR h_1(E)

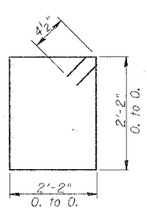

BAR s(E)

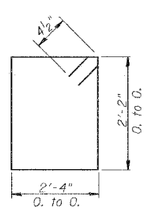

BAR s_1(E)

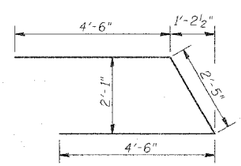

BAR u(E)

NOTES

1. After beams have been erected, 1½" holes shall be drilled into substructure and 1" dia. x 2'-6" anchor dowels placed. Dowel holes shall be filled with non-shrink grout to top of beam and allowed to cure min. 24 hrs. prior to grouting shear keys.
2. Hatched area to be cast against the in-place beams.
3. Reinforcement bars designated (E) shall be Epoxy Coated.
4. The Metal Shell Piles shall be according to ASTM A 252 Grade 3.
5. The Test Pile shall be driven to 110 percent of the Nominal Required Bearing indicated in the Pile Data information.
6. Reinforcement Bars shall conform to the requirements of ASTM A706 Grade 60 (IL Modified). See Special Provisions.

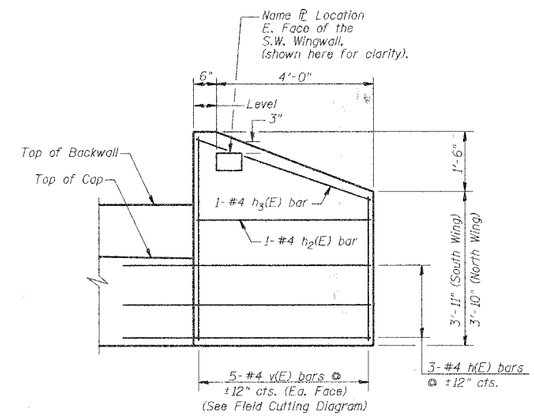

WINGWALL ELEVATION

(Showing Reinforcement in Front Face)

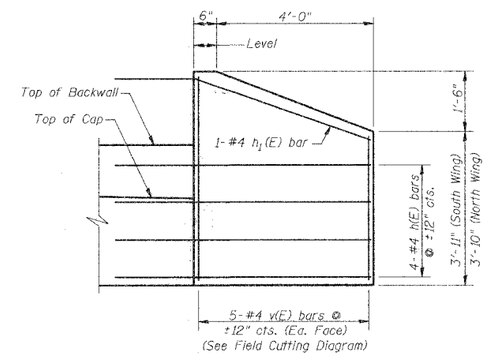

WINGWALL ELEVATION

(Showing Reinforcement in Back Face)

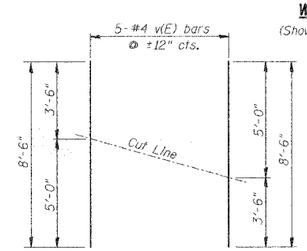

FIELD CUTTING DIAGRAM

Order bars full length. Cut to fit as shown and use remainder of bars in other face.

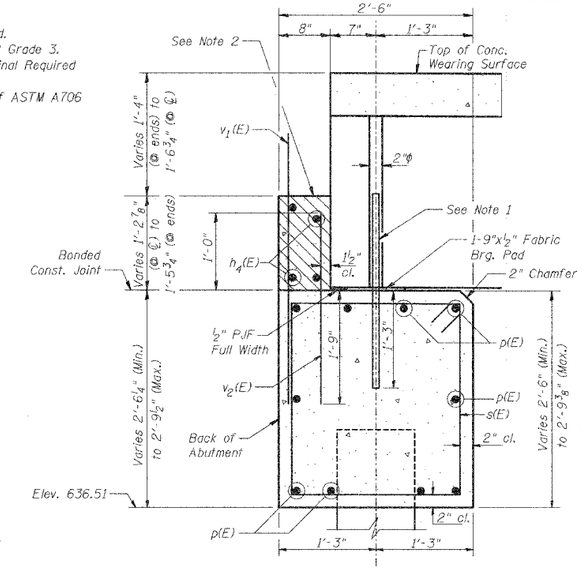

SECTION A-A

BILL OF MATERIAL
WEST ABUTMENT

Bar	No.	Size	Length	Shape
h(E)	14	#4	6'-3"	
h_1(E)	2	#4	6'-6"	
h_2(E)	2	#4	4'-2"	
h_3(E)	2	#4	4'-4"	
h_4(E)	4	#4	34'-11"	
p(E)	10	#7	34'-11"	
s(E)	34	#4	9'-5"	
s_1(E)	2	#4	9'-9"	
u(E)	8	#6	11'-5"	
v(E)	10	#4	8'-6"	
v_1(E)	35	#5	4'-3"	
v_2(E)	35	#5	2'-9"	
Reinforcement Bars, Epoxy Coated		Pound	1570	
Concrete Structures		Cu. Yd.	11.5	
Furnishing Metal Shell Piles 14"		Foot	238	
Driving Piles		Foot	238	
Structure Excavation		Cu. Yd.	46.3	

WEST ABUTMENT

Date	Designed MJP	CS #900 (HARRY LAND ROAD) OVER TRIB. TO LAKE DECATUR SECTION 05-00205-00-BR MACON COUNTY STA. 15+93.29 PROP. STR. NO. 058-3386	Sheet No. 5 of 7
Revisions	Drawn BKN		
	Checked KWB		
	Approved KWB		
Prepared by: URS	345 East Ash Avenue Decatur, Il. 62526		URS Job No. 36431928