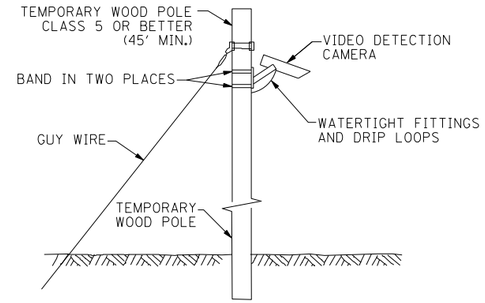

TEMPORARY VIDEO DETECTION
MOUNTING DETAIL
(NOT TO SCALE)

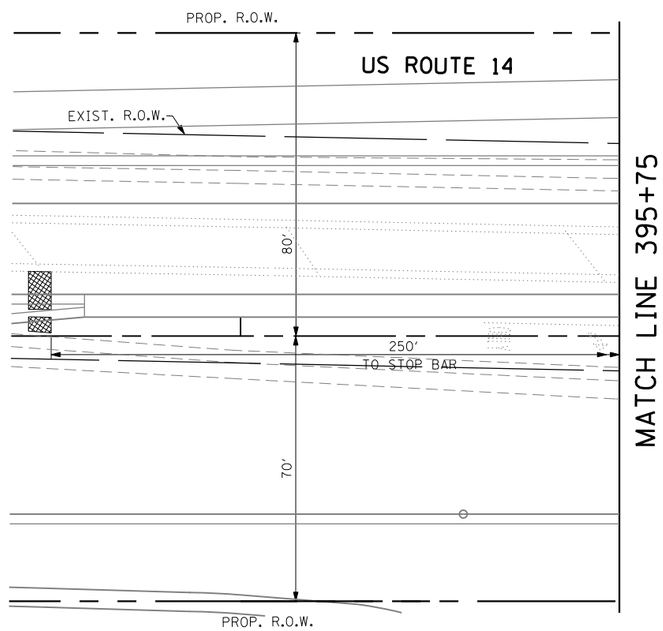

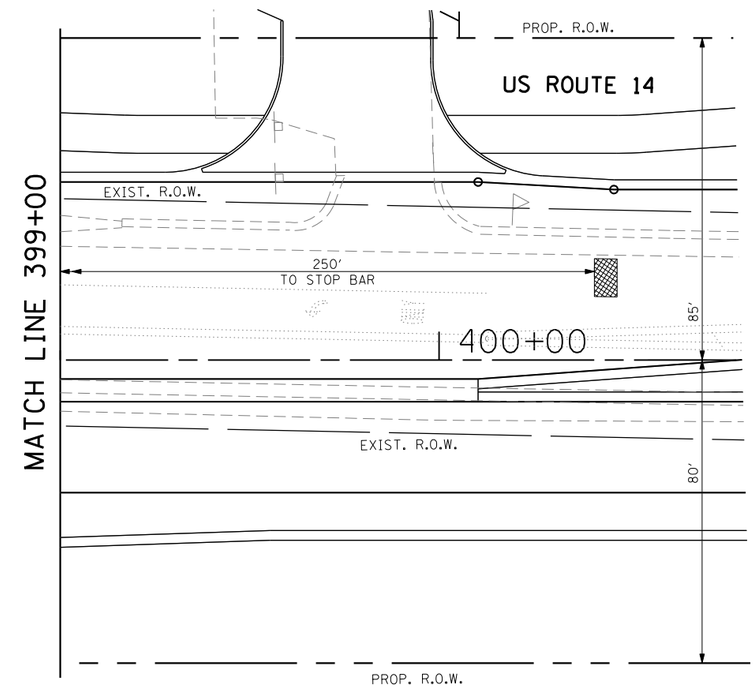

NOTE 1:

THE VIDEO DETECTION ZONES SHOWN ON THE PLANS ARE FOR PRE-CONSTRUCTION STAGE AND SHALL BE REDEFINED FOR EACH CONSTRUCTION STAGE AS A PART OF "TEMPORARY TRAFFIC SIGNAL INSTALLATION" WORK.

THE TRAFFIC SIGNAL CONTROL EQUIPMENT FOR THIS PROJECT SHALL BE "ECONOLITE" TO MATCH THE EXISTING ADJACENT SYSTEM.

FILE NAME = $FILEL$	USER NAME = $USER$	DESIGNED - PKG	REVISED -	STATE OF ILLINOIS DEPARTMENT OF TRANSPORTATION	TEMPORARY TRAFFIC SIGNAL INSTALLATION AND REMOVAL PLAN US ROUTE 14 AT DOTY ROAD PRE-STAGE (SHEET 2 OF 3)	F.A.P. RTE.	SECTION	COUNTY	TOTAL SHEETS	SHEET NO.
		DRAWN - EA, MG	REVISED -			305	27R-2	MCHENRY	673	443
	PLOT SCALE = $SCALE$	CHECKED - PKG	REVISED -					CONTRACT NO. 62268		
	PLOT DATE = $DATE$	DATE - 11/6/2013	REVISED -		SCALE: 1"=20' SHEET NO. OF SHEETS STA. TO STA.	FED. ROAD DIST. NO. _	ILLINOIS	FED. AID PROJECT		