F.A.I RTE.	SECTION	COUNTY	TOTAL SHEETS	SHEET NO.
*	(201-3)R & (4-1,5)R	WINNEBAGO	1685*	1
	ILLINOIS	CONTRACT NO. 64C24		

* FAI ROUTE 39 (I-39) & FAP 301 (US 20) *1685 + 1 = 1686 TOTAL SHEETS

08-01-2025 LETTING ITEM 002

STATE OF ILLINOIS
DEPARTMENT OF TRANSPORTATION

PROPOSED
HIGHWAY PLANS

FAI ROUTE 39 (I-39) & FAP ROUTE 301 (US 20)
PROJECT NHPP-5F4Z(497)
SECTION (201-3)R & (4-1,5)R
RECONSTRUCTION OF I-39/ US 20:
I-39 FROM 0.3 MI E OF MULFORD RD
TO 0.2 MI N OF HARRISON AVE
WINNEBAGO COUNTY

C-92-093-22

FOR INDEX OF SHEETS, SEE SHEET NO. 3

DESIGN DESIGNATION

I-39 & US 20: 9,595(DHV) 106,610(ADT) (40) INTERSTATE 101 (CRPC-20)
DESIGN SPEED: 70MPH POSTED SPEED: 65MPH
PV: 76% MU: 20% SU: 4%

RAMPS: 7,050(DHV) 17,800(ADT) (40) INTERSTATE 90.97 (CRPC-20)
DESIGN SPEED: 70MPH POSTED SPEED: 65MPH
OR
DESIGN SPEED: 50MPH POSTED SPEED: 45MPH
PV: 87% MU: 9% SU: 4%

STRUCTURES

I-39 /US20 OVER CN RAILROAD
EXISTING SN 101-0067 /0068 (NB /SB)
PROPOSED SN 101-0208 /0209 (NB /SB)

I-39 /US20 OVER UP RAILROAD
EXISTING SN 101-0069 /0070 (SB /NB)
PROPOSED SN 101-0210 /0211 (SB /NB)

I-39 /US20 OVER HARRISON AVE
EXISTING SN 101-0071 /0072 (NB /SB)
PROPOSED SN 101-0213 /0214 (NB /SB)

I-39 /US 20 NOISEWALL
PROPOSED SN 101-N7011

RAMP AD NOISEWALL
PROPOSED SN 101-N7009

RAMP DB NOISEWALL
PROPOSED SN 101-N7010

TOWNSHIPS: ROCKFORD & CHERRY VALLEY

SECTIONS: 16, 9, 10, 11, 3, 2, 35 AND 36

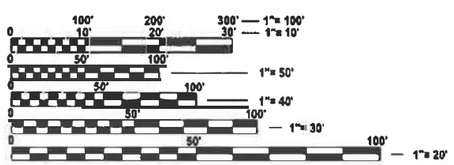

FULL SIZE PLANS HAVE BEEN PREPARED USING STANDARD ENGINEERING SCALES. REDUCED SIZED PLANS WILL NOT CONFORM TO STANDARD SCALES. IN MAKING MEASUREMENTS ON REDUCED PLANS, THE ABOVE SCALES MAY BE USED.

J.U.L.I.E.
JOINT UTILITY LOCATION INFORMATION FOR EXCAVATION
1-800-892-0123
OR 811

PROJECT MANAGER: ROBERT BARTON
SECTION ENGINEER: ANDREW LEE

CONTRACT NO. 64C24

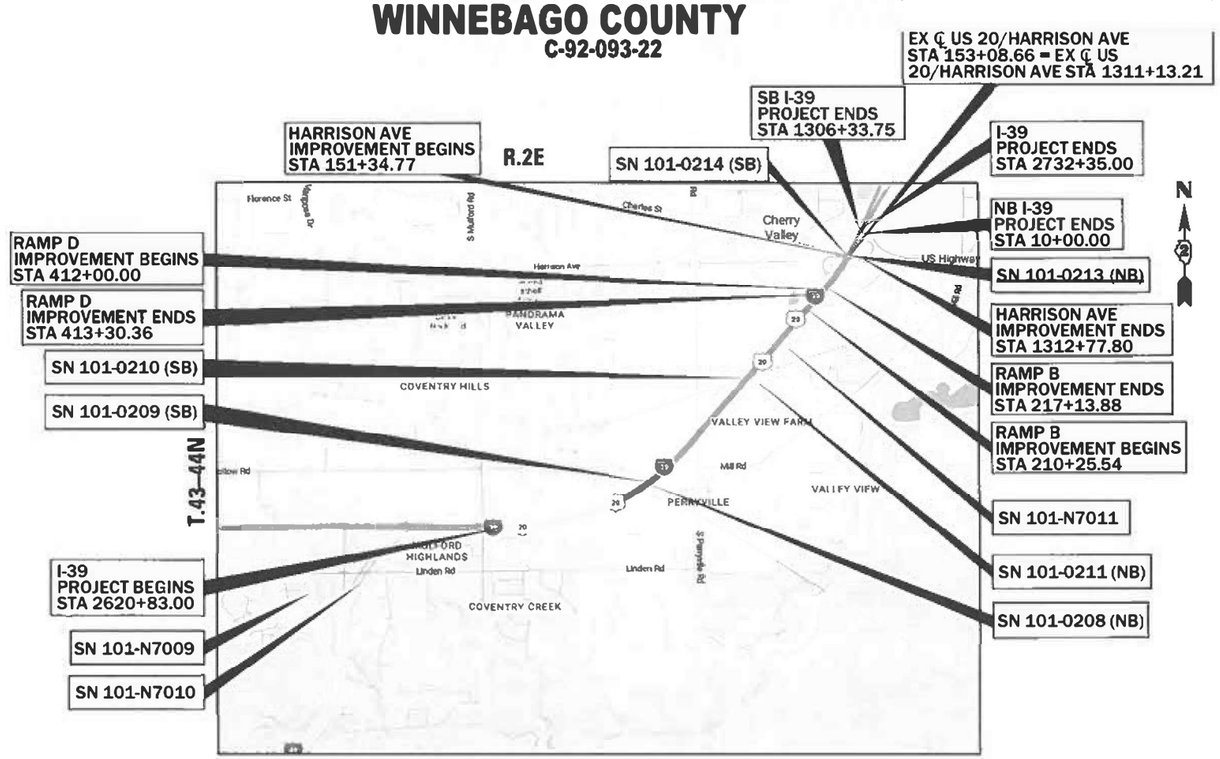

N.T.S.

GROSS LENGTH = 11,019.75 FT. = 2.087 MILE
NET LENGTH = 11,019.75 FT. = 2.087 MILE

benesch
Alfred Benesch & Company
35 West Wacker Drive, Suite 3300
Chicago, Illinois 60601
312-565-8450

D-92-057-06

LOCATION OF SECTION INDICATED THUS: -

STATE OF ILLINOIS
DEPARTMENT OF TRANSPORTATION

SUBMITTED March 19, 20 25
REGIONAL ENGINEER

May 9, 20 25
ENGINEER OF DESIGN AND ENVIRONMENT

May 9, 20 25
DIRECTOR OF HIGHWAYS PROJECT IMPLEMENTATION

PRINTED BY THE AUTHORITY OF THE STATE OF ILLINOIS

REV. 5/30/25 REV. 5/21/25 REV. 4/30/25

BENESCH
JEFFREY J TARDY
062-060042

DATE: 02-14-2025

SHEETS: 1-38, 144-255, 376-382, 857-1685

JEFFREY J. TARDY
062-060042
REGISTERED
PROFESSIONAL
ENGINEER
OF
ILLINOIS

EXPIRATION DATE: 11-30-2025

BENESCH
AIMEE L GIBSON
062-066832

DATE: 02-14-2025

SHEETS: 39-132

AIMEE L. GIBSON
062-066832
REGISTERED
PROFESSIONAL
ENGINEER
OF
ILLINOIS

EXPIRATION DATE: 11-30-2025

KASKASKIA
ROBERT J BOHNAK
062-057928

DATE: 02-14-2025

SHEETS: 133-143, 256-303, 468-485

ROBERT J. BOHNAK
062-057928
REGISTERED
PROFESSIONAL
ENGINEER
OF
ILLINOIS

EXPIRATION DATE: 11-30-2025

BENESCH
MATTHEW F HELLENTHAL
081-007652

DATE: 02-14-2025

SHEETS: 604-695

MATTHEW F. HELLENTHAL
081-007652
LICENSED
STRUCTURAL
ENGINEER
ILLINOIS

EXPIRATION DATE: 11-30-2026

BENESCH
GEOFFREY H. THIESSE
062-060445

DATE: 02-14-2025

SHEETS: 486-543

GEOFFREY H. THIESSE
062-060445
REGISTERED
PROFESSIONAL
ENGINEER
OF
ILLINOIS

EXPIRATION DATE: 11-30-2025

BENESCH
CATHERINE A RUTKOWSKI
062-072964

DATE: 02-14-2025

SHEETS: 304-375

CATHERINE A RUTKOWSKI
062-072964
REGISTERED
PROFESSIONAL
ENGINEER
OF
ILLINOIS

EXPIRATION DATE: 11-30-2025

QUIGG ENGINEERING
FRANCIS B NELSON III
062-059187

DATE: 02-14-2025

SHEETS: 383-428

FRANCIS B. NELSON
062-059187
REGISTERED
PROFESSIONAL
ENGINEER
OF
ILLINOIS

EXPIRATION DATE: 11-30-2025

QUIGG ENGINEERING
KEITH W BENTING
081-004777

DATE: 02-14-2025

SHEETS: 796-830

KEITH W. BENTING
082-004777
LICENSED
STRUCTURAL
ENGINEER
STATE OF ILLINOIS

EXPIRATION DATE: 11-30-2026

BENESCH
JOHN GISLASON
081-006703

DATE: 02-14-2025

SHEETS: 831-856

JOHN GISLASON
081-006703
LICENSED
STRUCTURAL
ENGINEER

EXPIRATION DATE: 11-30-2026

BOWMAN
ARTHUR J NOWAK
081-005894

DATE: 02-14-2025

SHEETS: 544-603

ARTHUR J. NOWAK
081-005894
LICENSED
STRUCTURAL
ENGINEER
STATE OF ILLINOIS

EXPIRATION DATE: 11-30-2026

QUIGG ENGINEERING
DAVID BOOHER
081-004775

DATE: 02-14-2025

SHEETS: 429-467

DAVID BOOHER
081-004775
LICENSED
STRUCTURAL
ENGINEER
STATE OF ILLINOIS

EXPIRATION DATE: 11-30-2026

BENESCH
JAMES L SURBER
081-007741

DATE: 02-14-2025

SHEETS: 696-776

JAMES L. SURBER
081-007741
LICENSED
STRUCTURAL
ENGINEER
ILLINOIS

EXPIRATION DATE: 11-30-2026

WILLET HOFFMAN
SCOTT A BROWN
081-005981

DATE: 02-14-2025

SHEETS: 777-788

SCOTT A BROWN
081-005981
LICENSED
STRUCTURAL
ENGINEER
STATE OF ILLINOIS

EXPIRATION DATE: 11-30-2026

KASKASKIA
MOSHE COHEN
081-008104

DATE: 02-14-2025

SHEETS: 789-795

MOSHE COHEN
081-008104
LICENSED
STRUCTURAL
ENGINEER
STATE OF ILLINOIS

EXPIRATION DATE: 11-30-2026

MODEL: SigSeal Sheet [Sheet]
FILE NAME: c:\pwworkl\benesch projects\projects\d0173723\D264C24-ML-Sht-Sig.dgn

benesch
Alfred Benesch & Company
35 W Wacker Drive, Suite 3200
Chicago, Illinois 60601
312-565-0450 Job No. 10800.00

USER NAME = tblank	DESIGNED - A.GIBSON	REVISED -	
	DRAWN - T.BLANK	REVISED -	
PLOT SCALE = $SCALE$	CHECKED - J.TARDY	REVISED -	
PLOT DATE = 2/13/2025	DATE - 02/14/2025	REVISED -	

STATE OF ILLINOIS
DEPARTMENT OF TRANSPORTATION

SIGNATURE AND SEALS

SCALE: SHEET OF 1 SHEETS STA. TO STA.

F.A.I RTE.	SECTION	COUNTY	TOTAL SHEETS	SHEET NO.
*	(201-3)R & (4-1.5)R	WINNEBAGO	1685	2
		CONTRACT NO. 64C24		
	ILLINOIS	FED. AID PROJECT		

* FAI ROUTE 39 (I-39) & FAP 301 (US 20)

INDEX OF SHEETS

MODEL: SHT IND [Sheet]
FILE NAME: c:\pwworkf\benesch projects\projects\d0173723\D264C24_ML-sht-IND.dgn

benesch
Alfred Benesch & Company
35 W Wacker Drive, Suite 3200
Chicago, Illinois 60601
312-565-0450 Job No. 10800.00

USER NAME = agibson	DESIGNED - A.GIBSON	REVISED -	
	DRAWN - T.BLANK	REVISED -	
PLOT SCALE = $SCALE$	CHECKED - J.TARDY	REVISED -	
PLOT DATE = 2/6/2025	DATE - 02/14/2025	REVISED -	

STATE OF ILLINOIS
DEPARTMENT OF TRANSPORTATION

INDEX OF SHEETS

SCALE: | SHEET 1 OF 4 SHEETS | STA. TO STA.

F.A.I RTE.	SECTION	COUNTY	TOTAL SHEETS	SHEET NO.
*	(201-3)R & (4-1.5)R	WINNEBAGO	1685	3

CONTRACT NO. 64C24

ILLINOIS | FED. AID PROJECT

* FAI ROUTE 39 (I-39) & FAP 301 (US 20)

REV. 5/22/25

HIGHWAY STANDARDS

000001-08	STANDARD SYMBOLS, ABBREVIATIONS AND PATTERNS
001001-02	AREAS OF REINFORCEMENT BARS
001006	DECIMAL OF AN INCH AND OF A FOOT
280001-07	TEMPORARY EROSION CONTROL SYSTEMS
420001-10	PAVEMENT JOINTS
420101-07	24' (7.2m) JOINTED PCC PAVEMENT
420111-04	PCC PAVEMENT ROUNDOUTS
420206-13	ENTRANCE RAMP TERMINAL (JOINTED PCC RAMP PAVEMENT ADJACENT TO CRC MAINLINE PAVEMENT)
420306-11	EXIT RAMP TERMINAL (JOINTED PCC RAMP PAVEMENT ADJACENT TO CRC MAINLINE PAVEMENT)
420401-13	PAVEMENT CONNECTOR (PCC) FOR BRIDGE APPROACH SLAB
420701-03	PAVEMENT WELDED WIRE REINFORCEMENT
421001-03	BAR REINFORCEMENT FOR CRC PAVEMENT
421101-10	24' (7.2m) CRC PAVEMENT (WITH WIDE FLANGE BEAM TERMINAL JOINT)
421106-10	36' (10.8m) CRC PAVEMENT (WITH WIDE FLANGE BEAM TERMINAL JOINT)
424001-12	PERPENDICULAR CURB RAMPS FOR SIDEWALKS
442201-03	CLASS C AND D PATCHES
483001-06	PCC SHOULDER
515001-04	NAME PLATE FOR BRIDGES
542001-06	CONCRETE END SECTIONS FOR PIPE CULVERTS 15" (375 mm) THRU 84" (2100 mm) DIA.
542011-02	CONCRETE END SECTIONS FOR ELLIPTICAL PIPE CULVERTS 15" (375mm) THRU 72" (1800mm) EQUIVALENT DIAMETER
542201-02	REINFORCED CONCRETE END SECTIONS FOR PIPE CULVERTS, 15" (375mm) THRU 36" (900mm) DIAMETER SKEWED WITH ROADWAY
542206-04	REINFORCED CONCRETE END SECTIONS FOR PIPE CULVERTS, 42" (1050mm) THRU 60" (1500mm) DIAMETER SKEWED WITH ROADWAY
542301-03	PRECAST REINFORCED CONCRETE FLARED END SECTION
542311-07	TRAVERSABLE PIPE GRATE FOR CONCRETE END SECTION
542401-04	METAL FLARED END SECTION FOR PIPE CULVERTS
601001-05	PIPE UNDERDRAINS
601101-02	CONCRETE HEADWALL FOR PIPE UNDERDRAIN
602001-02	CATCH BASIN, TYPE A
602016-02	CATCH BASIN, TYPE D
602106-03	DRAINAGE STRUCTURES, TYPES 4 & 5
602401-07	PRECAST MANHOLE, TYPE A, 4' (1.22 m) DIAMETER
602402-03	PRECAST MANHOLE, TYPE A, 5' (1.52m) DIAMETER
602406-11	PRECAST MANHOLE, TYPE A, 6' (1.83m) DIAMETER
602411-09	PRECAST MANHOLE, TYPE A, 7' (2.13 m) DIAMETER
602416-09	PRECAST MANHOLE, TYPE A, 8' (2.44 m) DIAMETER
602421-09	PRECAST MANHOLE, TYPE A, 9' (2.74m) DIAMETER
602426-03	PRECAST MANHOLE TYPE A 10' (3.05m) DIAMETER
602601-06	PRECAST REINFORCED CONCRETE FLAT SLAB TOP
602701-02	MANHOLE STEPS
604001-05	FRAME AND LIDS TYPE 1
604006-05	FRAME AND GRATE TYPE 3
604036-03	GRATE TYPE 8
604046-03	FRAME AND GRATE TYPE 10
604071-07	FRAME AND GRATE, TYPE 20
606101-05	TYPE A GUTTER (INLET, OUTLET, AND ENTRANCE)
610001-09	SHOULDER INLET WITH CURB
630001-13	STEEL PLATE BEAM GUARDRAIL
630201-07	PCC/HMA STABILIZATION AT STEEL PLATE BEAM GUARDRAIL
630301-09	SHOULDER WIDENING FOR TYPE 1 (SPECIAL) GUARDRAIL TERMINALS
631011-10	TRAFFIC BARRIER TERMINAL, TYPE 2
631026-06	TRAFFIC BARRIER TERMINAL, TYPE 5
631031-18	TRAFFIC BARRIER TERMINAL, TYPE 6
631033-09	TRAFFIC BARRIER TERMINAL, TYPE 6B
635001-02	DELINEATORS
637006-05	CONCRETE BARRIER, DOUBLE FACE, 44 in. (1120mm) HEIGHT
642001-03	SHOULDER RUMBLE STRIPS, 16IN.
664001-02	CHAIN LINK FENCE
666001-01	RIGHT-OF-WAY MARKERS
701001-02	OFF-RD OPERATIONS, 2L, 2W, MORE THAN 15' (4.5m) AWAY
701006-05	OFF-RD OPERATIONS, 2L, 2W, 15' (4.5m) TO 24" (600 mm) FROM PAVEMENT EDGE
701101-05	OFF-RD OPERATIONS, MULTILANE, 15' (4.5m) TO 24' (600mm) FROM PAVEMENT EDGE
701106-02	OFF-RD OPERATIONS, MULTILANE, MORE THAN 15' (4.5m) AWAY
701301-04	LANE CLOSURE, 2L 2W, SHORT TIME OPERATIONS
701400-12	APPROACH TO LANE CLOSURE, FREEWAY/EXPRESSWAY
701401-13	LANE CLOSURE, FREEWAY/EXPRESSWAY
701402-12	LANE CLOSURE FREEWAY/EXPRESSWAY WITH BARRIER
701406-13	LANE CLOSURE, FREEWAY/EXPRESSWAY, DAY OPERATIONS ONLY
701411-09	LANE CLOSURE, MULTILANE, AT ENTRANCE OR EXIT RAMP, FOR SPEEDS > 45 MPH
701426-09	LANE CLOSURE, MULTILANE, INTERMITTENT OR MOVING OPERATION, FOR SPEEDS > 45 MPH
701427-05	LANE CLOSURE, MULTILANE, INTERMITTENT OR MOVING OPERATIONS FOR SPEEDS 40 MPH OR LESS
701428-01	TRAFFIC CONTROL, SETUP AND REMOVAL, FREEWAY/EXPRESSWAY
701446-11	TWO LANE CLOSURE, FREEWAY/EXPRESSWAY
701456-05	PARTIAL EXIT RAMP CLOSURE FREEWAY/EXPRESSWAY
701501-06	URBAN LANE CLOSURE, 2L, 2W UNDIVIDED
701601-09	URBAN LANE CLOSURE, MULTILANE, 1W OR 2W WITH NONTRANVERSABLE MEDIAN
701606-10	URBAN SINGLE LANE CLOSURE, MULTILANE, 2w WITH MOUNTABLE MEDIAN
701701-10	URBAN LANE CLOSURE, MULTILANE INTERSECTION
701801-06	SIDEWALK, CORNER OR CROSSWALK CLOSURE
701901-10	TRAFFIC CONTROL DEVICES
704001-08	TEMPORARY CONCRETE BARRIER
720001-01	SIGN PANEL MOUNTING DETAILS
720006-04	SIGN PANEL ERECTION DETAILS
720011-01	METAL POSTS FOR SIGNS, MARKERS AND DELINEATORS
720021-03	SIGN PANELS, EXTRUDED ALUMINUM TYPE
725001-01	OBJECT AND TERMINAL MARKERS
728001-01	TELESCOPING STEEL SIGN SUPPORT
780001-05	TYPICAL PAVEMENT MARKINGS
781001-04	TYPICAL APPLICATIONS RAISED REFLECTIVE PAVEMENT MARKERS
782006-01	GUARDRAIL AND BARRIER WALL REFLECTOR MOUNTING DETAILS
812001-01	RACEWAYS EMBEDDED IN STRUCTURE
814001-03	HANDHOLES
821001	UNDERPASS LIGHTING WALL MOUNT
821006	UNDERPASS LIGHTING SUSPENDED
821101-03	LUMINAIRE WIRING IN POLE
830006-05	LIGHT POLE ALUMINUM DAVIT ARM
836011-02	LIGHT POLE FOUNDATION WITH 44 IN. (1120mm) CONCRETE BARRIER

DISTRICT 2 STANDARDS

CATCH BASINS OR INLETS TO BE ADJUSTED OR RECONSTRUCTED (DIST STD 17.4)
RIPRAP AT END SECTIONS (DIST STD 19.4)
DELINEATOR AND POST ORIENTATION (DIST STD 37.4)
TYPICAL BENCHING DETAIL ON EXISTING EMBARKMENT (DIST STD 50.4)

TYPICAL CONSTRUCTION OF EMBARKMENTS WITH GRANULAR MATERIAL (DIST STD 51.4)
STANDARD INLET FOR CURB & GUTTER (DIST STD 21.2)

FIELD TILE JUNCTION VAULTS 2' AND 3' DIA. (DIST STD 30.2)
TREATMENT OF FIELD TILE SYSTEMS UNDER DITCHES (DIST STD 31.2)

UNDERDRAIN FOR ACROSS ROAD (AR) CULVERTS (DIST STD 37.2)
PERMANENT SURVEY MARKERS, TYPE II (DIST STD 66.2)

CONCRETE COLLARS FOR PIPE OR BOX CULVERT EXTENSIONS (DIST STD 33.1)

WORK ZONE SIGN DETAILS SHEET 1 OF 4 (DIST STD 34.1)

WORK ZONE SIGN DETAILS SHEET 2 OF 4 (DIST STD 34.1)

WORK ZONE SIGN DETAILS SHEET 3 OF 4 (DIST STD 34.1)

WORK ZONE SIGN DETAILS SHEET 4 OF 4 (DIST STD 34.1)

TRAFFIC CONTROL TYPICAL WEAVE (DIST STD 39.1)

TRAFFIC CONTROL FOR ROAD CLOSURE (DIST STD 40.1)

TYPICAL PAVEMENT MARKINGS SHEET 1 OF 4 (DIST STD 41.1)

TYPICAL PAVEMENT MARKINGS SHEET 2 OF 4 (DIST STD 41.1)

TYPICAL PAVEMENT MARKINGS SHEET 3 OF 4 (DIST STD 41.1)

TYPICAL PAVEMENT MARKINGS SHEET 4 OF 4 (DIST STD 41.1)

GUARDRAIL REFLECTORS, TYPE C, SPECIAL (DIST STD 55.1)

SLOTTED DRAIN PIPE (DIST STD 68.1)

MODEL: HWY STDS [Sheet]
FILE NAME: c:\pwworking\benesch projects\projects\d0173723\D264C24-Mt-sht-GeneralNotes.dgn

USER NAME = agibson	DESIGNED - A. GIBSON	REVISED -	
	DRAWN - T. BLANK	REVISED -	
PLOT SCALE = $SCALE$	CHECKED - J. TARDY	REVISED -	
PLOT DATE = 2/6/2025	DATE - 02/27/24	REVISED -	

STATE OF ILLINOIS
DEPARTMENT OF TRANSPORTATION

LIST OF STANDARDS

SCALE: | SHEET 2 OF 4 SHEETS | STA. TO STA.

F.A.I RTE.	SECTION	COUNTY	TOTAL SHEETS	SHEET NO.
*	(201-3)R & (4-1.5)R	WINNEBAGO	1685	4
		CONTRACT NO. 64C24		
	ILLINOIS	FED. AID PROJECT		

* FAI ROUTE 39 (I-39) & FAP 301 (US 20)

GENERAL NOTES

1. THE CONTRACTOR SHALL SEED ALL DISTURBED AREAS WITHIN THE PROJECT LIMITS. SEEDING CLASS 2A, 4, 4A, AND 5 SHALL BE USED EXCEPT IN FRONT OF PROPERTIES WHERE THE GRASS WILL BE MOWED, THEN USE SEEDING CLASS 1A. CLASS 5 AND 4A SEED SHALL BE USED ON BACK SLOPES AND FORE SLOPES IN THE PROJECT. CLASS 2A SHALL BE USED IN DITCH BOTTOMS. CLASS 4 SHALL BE USED BEHIND TYPE A GUTTER, AND AREAS BEHIND THE BACK SLOPE, AND BEYOND THE TOE OF FRONT SLOPE ON FILL SECTIONS WITHOUT DITCHES.

2. PREVIOUSLY PUGMILLED STOCKPILES OF "TYPE A" OLDER THAN 1 MONTH WILL NOT BE APPROVED FOR USE UNTIL A MOISTURE CHECK IS RUN TO VERIFY MOISTURE CONTENT. MATERIAL SHIPPED TO PROJECTS WITHOUT BEING TESTED WILL NOT BE ACCEPTED.

3. PLACEMENT AND COMPACTION OF THE BACKFILL FOR THE PROPOSED ACROSS ROAD CULVERTS AND EXISTING ACROSS ROAD CULVERTS THAT ARE REMOVED, SHALL CONFORM TO ARTICLE 502.10 OF THE STANDARD SPECIFICATIONS, EXCEPT THAT THE MATERIAL, EITHER PRODUCTION AGGREGATE OR EXCAVATED MATERIAL, SHALL CONFORM TO ARTICLE 208.02 OF THE STANDARD SPECIFICATIONS, AND SHALL BE COMPACTED TO A MINIMUM OF 95% OF THE STANDARD LABORATORY DENSITY. THE TOP ONE FOOT OF TRENCH BACKFILL SHALL BE GRADATION CA06 OR CA10, BENEATH THE PROPOSED PAVEMENT/PATCH.

   THE ENTIRE EXCAVATION, WITHIN 2 FEET OUTSIDE OF EACH SHOULDER, SHALL BE BACKFILLED WITH TRENCH BACKFILL MATERIAL TO THE BOTTOM OF THE PROPOSED PAVEMENT/PATCH. IMPERVIOUS MATERIAL SHALL BE USED ON THE OUTER 3 FEET AT EACH END OF THE CULVERT.

   THE TRENCH BACKFILL MATERIAL WILL BE MEASURED FOR PAYMENT IN ACCORDANCE WITH ARTICLE 502.12, NOT TO EXCEED 2 FEET OUTSIDE THE STRUCTURE.

4. THE CONTRACTOR WILL BE REQUIRED TO FURNISH 5 ½" HIGH BRASS STENCILS AS APPROVED BY THE ENGINEER AND INSTALL STATIONING AT 250' INTERVALS. STATIONING SHALL BE PLACED ON BOTH LANES OF 2-LANE HIGHWAYS AND ON THE OUTSIDE LANES IN BOTH DIRECTIONS ON 4-LANE HIGHWAYS. THE STATIONS SHALL BE PLACED 6" INSIDE THE PAVEMENT MARKING EDGE SO THEY CAN BE READ FROM THE SHOULDER. THIS WORK WILL BE INCLUDED IN THE COST OF THE FINAL PAVEMENT SURFACE.

5. THE AREA TO BE TACKED OR PRIMED SHALL BE LIMITED TO THAT WHICH CAN BE COVERED WITH HMA ON THE NEXT DAY'S PRODUCTION, BUT NO MORE THAN FIVE DAYS IN ADVANCE OF THE PLACEMENT OF THE HMA, UNLESS APPROVED BY THE ENGINEER.

6. THE NEW NUMBERS FOR THE STRUCTURES ON THIS PROJECT WILL BE:

   SN 101-0208 (I-39 NB OVER CNRR)
   SN 101-0209 (I-39 SB OVER CNRR)
   SN 101-0210 (I-39 NB OVER UPRR)
   SN 101-0211 (I-39 SB OVER UPRR)
   SN 101-0213 (I-39 NB OVER HARRISON AVE)
   SN 101-0214 (I-39 SB OVER HARRISON AVE)
   SN 101-2053 (MADIGAN CREEK CULVERT)
   SN 101-1360 (CHERRY VALLEY PATH TUNNEL)
   SN 101-N7009 (RAMP AD - 1 SEGMENT)
   SN 101-N7010 (RAMP DB - 2 SEGMENTS)
   SN 101-N7011 (I-39 - 5 SEGMENTS)

7. CULVERT & BRIDGE FLOWS MUST BE MAINTAINED THROUGHOUT THE PROJECT. NORMAL FLOW SHALL BE ALLOWED TO PASS AT THE RATE IT ENTERS THE JOBSITE. HIGH FLOWS SHALL BE ALLOWED TO PASS WITHOUT CAUSING DAMAGE TO UPSTREAM PROPERTIES.

8. PRECAST GRATED INLET SPECIALS MAY BE SUBSTITUTED IN LIEU OF CAST-IN-PLACE UNITS WITH FLOORS UPON RECEIPT OF MANUFACTURER'S SHOP DRAWINGS WHICH HAVE BEEN APPROVED BY THE DEPARTMENT. THE CONTRACTOR SHALL BE RESPONSIBLE FOR VERIFYING NECESSARY DIMENSIONS ON THE EXISTING DRAINAGE STRUCTURE REQUIRED FOR THE ATTACHMENT. NO ADDITIONAL COST FOR THIS SUBSTITUTION SHALL BE ALLOWED.

9. THE COST OF MAKING STORM SEWER CONNECTIONS TO EXISTING DRAINAGE STRUCTURES SHALL BE INCLUDED IN THE VARIOUS CONTRACT UNIT PRICES FOR STORM SEWER.

10. DRAINAGE STRUCTURE LATERAL OFFSET DISTANCES (FROM CENTERLINE) ARE AS FOLLOWS:
    A. DRAINAGE STRUCTURES LOCATED ALONG CONCRETE BARRIER IN THE ROADWAY MEDIAN: OFFSET IS TO CENTER OF STRUCTURE, AT CENTER OF MEDIAN BARRIER
    B. DRAINAGE STRUCTURES NOT LOCATED ALONG CONCRETE BARRIER
       - CATCH BASINS: OFFSET IS TO CENTER OF GRATE
       - MANHOLES LOCATED ALONG SHOULDER: OFFSET IS TO CENTER OF STRUCTURE, AND GRATE IS OFFSET FROM CENTER OF STRUCTURE (SEE STANDARD DETAIL)
       - MANHOLES & CONTROL STRUCTURES NOT LOCATED ALONG ROADWAY SHOULDER: OFFSET & GRATE LOCATED AT CENTER OF STRUCTURE UNLESS OTHERWISE NOTED
       - END SECTIONS: OFFSET & ELEVATION IS LOCATED AT END OF PIPE

11. ALL GUTTER OUTLETS SHALL BE EXTENDED TO THE DITCH FLOW AS DIRECTED BY THE ENGINEER.

12. THE CONTRACTOR SHALL SUPPLY THE RESIDENT ENGINEER WITH THE MANUFACTURER'S INSTALLATION REQUIREMENTS FOR THE TYPE OF STEEL PLATE BEAM GUARDRAIL TERMINAL TYPE 1 SPECIAL (TANGENT) OR STEEL PLATE BEAM GUARDRAIL TERMINAL TYPE I SPECIAL (FLARED).

13. CONTROLLED LOW-STRENGTH MATERIAL (CLSM) MAY BE USED TO MAINTAIN AN EXPOSED EXCAVATION IN THE IMMEDIATE AREA OF A STORM PIPE RUN THAT SPANS DIFFERENT CONSTRUCTION STAGES, AS DIRECTED BY THE ENGINEER.

14. DELINEATORS SHALL BE INSTALLED AS SHOWN IN STANDARD 635001, EXCEPT THAT THE POST SHALL BE ROTATED 180° AND ONLY METAL-BACKED DELINEATORS SHALL BE PERMITTED. DELINEATORS SHALL BE PLACED AT THE ENDS OF APPROACH GUARDRAIL TERMINAL SECTIONS, AT EACH FIELD TILE JUNCTION VAULT, AT EACH PIPE UNDERDRAIN OUTLET, AND AT EACH HEADWALL OR END SECTION OF AR CULVERTS. THIS WORK WILL BE PAID FOR AT THE CONTRACT UNIT PRICE EACH FOR DELINEATORS.

15. THE CONTRACTOR SHALL BE RESPONSIBLE FOR COLLECTING AND MAINTAINING AN ELECTRONIC LOG OF ALL STAKEOUT SURVEY THAT IS PERFORMED ON THE JOB, EITHER BY HIM/HER OR ANY SUB-CONTRACTOR PERFORMING THE STAKEOUT. UPON REQUEST, ALL LOGS SHALL BE SUBMITTED TO THE DEPARTMENT. NO ADDITIONAL COMPENSATION WILL BE ALLOWED FOR THIS WORK, BUT SHALL BE CONSIDERED INCLUDED IN THE COST FOR CONSTRUCTION LAYOUT.

16. PAVEMENT MARKING SHALL BE DONE ACCORDING TO STANDARD 780001, EXCEPT AS FOLLOWS:

    1. ALL WORDS, SUCH AS ONLY, SHALL BE 8 FEET HIGH.
    2. ALL NON-FREEWAY ARROWS SHALL BE THE LARGE SIZE.
    3. THE DISTANCE BETWEEN YELLOW NO-PASSING LINES SHALL BE 8 INCHES, NOT 7 INCHES, AS SHOWN IN THE DETAIL OF TYPICAL LANE AND EDGE LINES.
    4. CENTERLINE SKIP DASH PAVEMENT MARKING ON MULTI-LANE DIVIDED, MULTI-LANE UNDIVIDED, AND ONE-WAY ROADWAY SHALL BE ACCORDING TO DISTRICT STANDARD 41.1.

17. PERMANENT SURVEY MARKERS, TYPE II, SHALL BE SET AT INTERVALS OF 1 MILE OR AS DIRECTED BY THE ENGINEER. BRIDGE OR CULVERT PROJECTS SHALL HAVE ONE SURVEY MARKER PLACED NEAR THE STRUCTURE. ESTIMATED: 9 EACH.

18. PERMANENT SURVEY MARKERS, TYPE II SHALL BE CAST-IN-PLACE AS SHOWN ON DISTRICT STANDARD 66.2, OR ANOTHER OPTION WOULD BE TO INSTALL A VAULTED STYLE MONUMENT AS DESCRIBED BY NGS AS A 3D MONUMENT (TOP SECURITY SLEEVE ROD MONUMENT), WITH INSTALLATION INSTRUCTIONS PROVIDED BY THE DISTRICT CHIEF OF SURVEYS. IF POURED IN PLACE, THE BOTTOM OF THE MARKER SHALL BE 5'-0" BELOW THE GROUND SURFACE.

19. THE PERMANENT SURVEY MARKERS, IF POSSIBLE, SHALL BE INSTALLED AT THE BEGINNING OF THE JOB AND PROTECTED THROUGHOUT.

20. THE CONTRACTOR SHALL SUBMIT TO THE ENGINEER A DESCRIPTION OF LOCATION, ELEVATION, AND COORDINATES FOR EACH PERMANENT SURVEY MARKER. THE HORIZONTAL COORDINATES MUST BE DERIVED BY GPS AND THE ELEVATION DERIVED USING AN ELECTRONIC LEVEL. THE META DATA, SUCH AS THE GEOID USED, (NGS ADJUSTMENT IE: 97 HARN, 03, 07), AND THE BASE POINT(S) NAME OR NUMBER SHALL BE SUBMITTED ALONG WITH A COMPLETE COLLECTION LOG. IF COLLECTED USING RTK METHOD, IT WILL REQUIRE EITHER 3 COLLECTIONS (AVERAGED) FROM 2 DIFFERENT BASES, OR A MINIMUM OF 3 COLLECTIONS (AVERAGED), AT LEAST 2 HOURS APART, FROM THE SAME BASE. IF USING A CORS TYPE NETWORK, THE COLLECTION PROCEDURE SHALL INCLUDE LOCALIZING WITH CHECK SHOTS ON AT LEAST 2 DIFFERENT HARN MONUMENTS BOTH BEFORE AND AFTER COLLECTION. THE LEVEL CIRCUIT SHALL BE RUN FROM FURNISHED MARK TO FURNISHED MARK AND THEN ADJUSTED. THE ERROR OF CLOSURE SHALL BE SUBMITTED WITH THE ELECTRONIC LEVEL NOTES IN A RECOGNIZED FORMAT APPROVED BY THE ENGINEER AND/OR THE CHIEF OF SURVEYS. THE ENGINEER SHALL SUBMIT THIS INFORMATION TO THE DISTRICT CHIEF OF SURVEYS.

21. THE CONTRACTOR SHALL BEGIN FENCE ERECTION AS SOON AS CLEARING OPERATIONS PERMIT. THE CONTRACTOR SHALL SCHEDULE THE WORK SUCH THAT THE PROPOSED FENCE CAN BE INSTALLED IMMEDIATELY FOLLOWING THE REMOVAL AS CONSTRUCTION PERMITS. THE COST OF ARRANGING WORK AS HEREIN SPECIFIED WILL NOT BE PAID FOR AS A SEPARATE ITEM BUT SHALL BE INCLUDED IN THE CONTRACT UNIT PRICE PER FOOT FOR CHAIN LINK FENCE.

22. RIGHT-OF-WAY MARKERS WILL BE ERECTED PER HIGHWAY STANDARD 666001 WITH THE BACK FACE OF THE MARKER ON THE RIGHT-OF-WAY LINE, UNLESS THE NEW RIGHT-OF-WAY LINE HAS BEEN SURVEYED AND PINNED, IN WHICH INSTANCE THE RIGHT OF WAY MARKERS WILL BE ERECTED 12 INCHES INSIDE THE NEW RIGHT-OF-WAY LINE. THE METHOD OF INSTALLATION SHALL BE APPROVED BY THE ENGINEER.

23. SEE SPECIAL PROVISIONS FOR INFORMATION REGARDING COORDINATION WITH ADJACENT AND/OR OVERLAPPING CONTRACTS.

24. THE CONTRACTOR IS RESPONSIBLE FOR LOCATING ALL EXISTING STATE OWNED LIGHTING, FIBER OPTION AND/OR TRAFFIC SIGNAL UTILITIES.

25. RELOCATE TEMPORARY IMPACT ATTENUATORS SHALL INCLUDE STORAGE AND TRANSPORTATION TO AND FROM STORAGE, WHEN THE DEVICE IS NOT NEEDED FOR A TIME, AS SHOWN ON THE STAGING PLANS. THIS SHALL BE INCLUDED IN THE CONTRACT UNIT PRICE PER EACH FOR IMPACT ATTENUATORS, RELOCATE OF THE TYPE SPECIFIED.

26. WHEN RELOCATE TEMPORARY CONCRETE BARRIER IS SPECIFIED, THE WALL SHALL BE REMOVED, STORAGE AND TRANSPORTATION TO AND FROM STORAGE, WHEN THE WALL IS NOT NEEDED FOR A TIME AS SHOWN ON THE STAGING PLANS, RELOCATED AND REINSTATED AT THE NEW LOCATION. THE REINSTALLATION REQUIREMENTS SHALL BE THE SAME AS THOSE FOR A NEW INSTALLATION. THIS SHALL BE PAID FOR AT THE CONTRACT UNIT PRICE PER FOOT FOR RELOCATE TEMPORARY CONCRETE BARRIER.

27. THE CONTRACTOR SHALL TAKE PRECAUTIONS TO PERFORM GRADING ACTIVITIES AT/NEAR ANY FENCE TO REMAIN. ANY DAMAGE TO THE EXISTING FENCE TO REMAIN WILL BE REPAIRED OR REPLACED BY THE CONTRACTOR AT NO ADDITIONAL COST TO THE CONTRACT.

28. THE CONTRACTOR IS RESPONSIBLE FOR ROADWAY CONDITIONS WITHIN THE CONSTRUCTION LIMITS.

29. INCASE OF ANY ACCIDENTAL DISRUPTION IN SERVICE TO THE FIBER OPTIC CABLE DURING CONSTRUCTION, THE CONTRACTOR SHALL CONTACT THE 24 HOUR EMERGENCY CONTACT NUMBER AT 312-814-3648.

30. FLOWABLE FILL MAY BE USED BETWEEN THE PIPE CULVERTS, CLASS A 84" (JACKED) IF STONE BEDDING COMPACTION CANNOT BE ACHIEVED, AS DIRECTED BY THE ENGINEER.

31. THE CONCRETE BARRIER AND CONCRETE BARRIER BASE SHOWN ON THE CROSS SECTIONS AND MOT TYPICAL SECTIONS SHALL BE CONSTRUCTED ACCORDING TO THE PROPOSED TYPICAL SECTIONS AND THE CONCRETE BARRIER BASE DETAIL ON SHEET 132A.

32. A.1 MATERIAL SHALL NOT BE STOCKPILED ABOVE ANY CURRENT OR FUTURE DETENTION BASIN.

33. THE FOLLOWING LISTED UTILITIES LOCATED WITHIN THE PROJECT LIMITS OR IMMEDIATELY ADJACENT TO THE PROJECT CONSTRUCTION LIMITS ARE MEMBERS OF JULIE:

NAME	COMPANY	TYPE	PHONE NUMBER
CARL DONAHUE	AT&T COMMUNICATIONS	TELEPHONE	630-552-4677
CHIP PARROT	NICOR	GAS	630-388-3019
TOM YUCCAS	COMCAST	CATV	815-509-8653
LANCE SANDY	IFIBER	FIBER	815-753-5798
STEVE STRASSER	V. CHERRY VALLEY	SEWER & WATER	815-332-3441
BOB SULLIVAN	G4S	COMMUNICATIONS	630-272-9245
JASON KLEIN	FRONTIER	TELEPHONE	309-853-6297
HECTOR GARCIA	AT&T	TELEPHONE	630-573-5465
VINCENT MAZZAFERRO	COMED	ELECTRIC	630-437-2212
KYLE GRUHN	FOUR RIVERS SANITATION	SEWER	815-387-7400

IDOT IS NOT A MEMBER OF JULIE. IF YOU ARE NEAR ANY OVERHEAD LIGHTING, FIBER OPTIC OWNED BY IDOT, INTERSECTION LIGHTING OR TRAFFIC SIGNALS. THE CONTRACTOR SHALL BE RESPONSIBLE FOR LOCATING ALL IDOT FACILITIES.

34. TOLLWAY PERMIT AND BOND - THE CONTRACTOR WILL BE REQUIRED TO OBTAIN A PERMIT FROM THE ILLINOIS STATE TOLL HIGHWAY AUTHORITY (ISTHA) ACCORDING TO ARTICLE 107.04 OF THE STANDARD SPECIFICATIONS PRIOR TO INITIATING ANY LANE CLOSURES ON THE TOLLWAY OR DOING ANY WORK ON THE ISTHA RIGHT OF WAY. AS PART OF THE PERMIT, THE CONTRACTOR WILL BE REQUIRED TO POST A SURETY BOND WITH THE ISTHA. THE CONTRACTOR WILL FURNISH A COPY OF THE AUTHORIZED PERMIT TO THE ENGINEER.

35. COORDINATION WITH ISTHA WILL BE AS FOLLOWS: THE CONTRACTOR WILL NOTIFY THE ENGINEER 14 CALENDAR DAYS PRIOR TO COMMENCEMENT OF ANY WORK ON OR AFFECTING AN ILLINOIS TOLLWAY, SO AS TO PROVIDE THE OPPORTUNITY TO ALERT THE MOTORING PUBLIC OF POSSIBLE DELAYS. THE ENGINEER OR CORRIDOR CONSTRUCTION MANAGER WILL NOTIFY ILLINOIS TOLLWAY OF THE START OF WORK. THE CONTRACTOR MUST SECURE A PERMIT FROM ILLINOIS TOLLWAY FOR ALL WORK ON I-39 UNDER ILLINOIS TOLLWAY JURISDICTION. INDEMNIFICATION TO THE FULLEST EXTENT PERMITTED BY LAW, THE CONTRACTOR WILL INDEMNIFY AND SAVE HARMLESS THE ILLINOIS TOLLWAY IN ACCORDANCE WITH ARTICLE 107.26 OF ILLINOIS TOLLWAY SUPPLEMENTAL SPECIFICATIONS.

36. THE CONTRACTOR SHALL CONTACT BEN CHRISTIANSEN OF THE FOUR RIVERS SANITARY AUTHORITY AT (815) 209-7952, FORTY-EIGHT (48) MINIMUM, HOURS PRIOR TO PERFORMING ANY SANITARY SEWER WORK, INCLUDING ANY WORK THAT WILL BE PERFORMED WHERE THERE IS LESS THAN 18 INCHES OF VERTICAL SEPARATION BENEATH OR ABOVE SANITARY SEWERS.

37. THE CONTRACTOR SHALL NOTIFY TRAFFIC OPERATIONS A MINIMUM OF 5 WORKING DAYS PRIOR TO PLACING PERMANENT PAVEMENT MARKING OR SIGNING.

38. UNLESS OTHERWISE SPECIFIED OR DIRECTED BY THE ENGINEER TIE BARS, BARS IN THE CRC PAVEMENT, AND PCC SHOULDERS SHOULD BE EPOXY COATED.

39. IT SHALL BE THE CONTRACTOR'S RESPONSIBILITY TO CONTACT THE MUNICIPALITY TO DETERMINE APPROVED METHODS OF UTILITY STRUCTURE ADJUSTMENT. UTILITY STRUCTURES MAY INCLUDE, BUT ARE NOT LIMITED TO, MANHOLES, WATER VALVES, HANDHOLES, ETC. ALL MATERIALS AND WORK NECESSARY TO COMPLETE ADJUSTMENTS PER MUNICIPALITY REQUIREMENTS SHALL BE CONSIDERED INCLUDED IN THE COST OF THE ASSOCIATED ADJUSTMENT PAY ITEM.

40. IN ADDITION TO TRAFFIC STAGING, DRAINAGE, AND STRIPING ON TOLLWAY PROPERTY, THE CONTRACTOR SHALL BE AWARE THAT CONTRACT 64C24 WILL INCLUDE WORK TO IDOT ROADWAYS THAT LIE WITHIN TOLLWAY-OWNED RIGHT-OF-WAY PARCELS. THE CONTRACTOR SHALL COORDINATE WITH THE TOLLWAY TO OBTAIN ALL NECESSARY PERMITS AND PERMISSIONS FOR ACCESS ONTO THE TOLLWAY-OWNED PARCELS PRIOR TO THE START OF CONSTRUCTION ACTIVITIES. THESE PARCELS INCLUDE BOTH THE OUTER PARCELS ALONG RAMP A (WB HARRISON TO NB I-39), AND ALL OF THE PARCELS ALONG I-39 NORTH OF STATION 2738+00 (APPROXIMATELY 1,400' NORTH OF HARRISON AVE).

41. WHEN TEMPORARY OR PERMANENT STORM SEWER IS PLACED BELOW EXISTING PAVEMENT OR TEMPORARY PAVEMENT, THE EXISTING OR TEMPORARY PAVEMENT WITHIN THE LIMITS OF THE TRENCHING OPERATION SHALL BE REMOVED AND REPLACED, AND PAID FOR AS CLASS D PATCHES, TYPE III, 14 INCH.

42. THE CONTRACTOR IS RESPONSIBLE FOR SUBMITTING OUTAGE REQUEST FORMS FOR THE DYNAMIC MESSAGE SIGNS AND CCTV CAMERAS.

43. CONTRACT 64R71 WILL BE AN ACTIVE CONSTRUCTION PROJECT. TOPOGRAPHIC CONDITIONS MAY VARY FROM THE PLANS.

44. ALL TEMPORARY SOIL RETENTION USED FOR PLACEMENT OF DRAINAGE OR TEMPORARY DRAINAGE ITEMS MUST BE REMOVED.

COMMITMENTS

TREES THREE (3) INCHES OR GREATER IN DIAMETER AT BREAST HEIGHT CAN BE CLEARED AUGUST 1 - OCTOBER 10 OF ANY GIVEN YEAR TO PROTECT THE QUEENS BEFORE THEY RETURN TO THEIR OVER-WINTERING BURROWS. THE US FISH AND WILDLIFE SERVICE CONCURRED WITH OUR DETERMINATION AND DATE RESTRICTION ON TREE CLEARING.

THE PROJECT SPONSOR WILL BEGIN MOWING AND CONTINUE TO MOW WITHIN THE LIMITS OF THE PROPOSED IMPROVEMENT FROM MARCH 15 - OCTOBER 10. THE MOWING SHOULD BE KEEP AT A HEIGHT OF 6". THIS COMMITMENT WILL BE ADHERED TO UNTIL THE END OF CONSTRUCTION.

ALL TREE IMPACTS WILL BE MITIGATED UNDER INTER GOVERNMENTAL AGREEMENT NO. 21-IDNR-TREES-D2 WITH IDNR, THEREFORE NO TREE REPLACEMENT IS INCLUDED WITH THIS PROJECT. THIS AGREEMENT COVERS ALL PROJECTS FUNDED FROM FY 2025 THROUGH FY 2028.

CLASS 4A AND 5 SEEDING SHALL BE USED ON ALL BACK SLOPE AND FORE SLOPES ON THE PROJECT. PLEASE REFER TO SPECIAL PROVISION FOR ADDITIONAL INFORMATION AND FOLLOW THE SPECS IN SECTION 250 OF THE MANUAL FOR ANY TEMPORARY SOIL DISTURBANCE WITHIN THE PROJECT LIMITS.

HOT-MIX ASPHALT TABLE

LOCATION AND MIXTURE USE(S):	I-39 STABILIZED SUBBASE	HOT-MIX ASPHALT SHARED-USED PATH	TEMPORARY PAVEMENT VAR. THICKNESS	TEMPORARY PAVEMENT*		CLASS D PATCHES, TYPE III, 14 INCH		PAVEMENT PATCHING		TEMPORARY MILLING AND RESURFACING	
				SURFACE	BINDER	SURFACE	BINDER	SURFACE	BINDER	SURFACE	BINDER
THICKNESS:	4"	4"	VARIES	1.5"	11.75"	2"	12"	2"	7"	VARIES	VARIES
PG:	PG 64-22	PG 58-28	PG 64-22	PG 64-22	PG 64-22	PG 64-22	PG 64-22	PG 64-22	PG 64-22	PG 64-22	PG 64-22
DESIGN AIR VOIDS:	4.0% @ N50	4.0% @ N50	4.0% @ N70	4.0% @ N70	4.0% @ N70	4.0% @ N70	4.0% @ N70	4.0% @ N70	4.0% @ N70	4.0% @ N70	4.0% @ N70
MIXTURE COMPOSITION:	IL-9.5, 9.5FG or 19.0	IL-9.5FG	IL-19.0	IL-9.5	IL-19.0	IL-9.5	IL-19.0	IL-9.5	IL-19.0	IL-9.5	IL-19.0
FRICTION AGGREGATE:	N/A	N/A	N/A	E	N/A	D	N/A	D	N/A	D	N/A
MIXTURE WEIGHT:	112 LBS/SY/IN	112 LBS/SY/IN	N/A	117 LBS/SY/IN	N/A	112 LBS/SY/IN	N/A	112 LBS/SY/IN	N/A	112 LBS/SY/IN	N/A
QUALITY MANAGEMENT PROGRAM:	QC/QA	QC/QA	QC/QA	QC/QA	QC/QA	QC/QA	QC/QA	QC/QA	QC/QA	QC/QA	QC/QA
SUBLOT SIZE:	N/A	N/A	N/A	N/A	N/A	N/A	N/A	N/A	N/A	N/A	N/A
MATERIAL TRANSFER DEVICE	NO	NO	NO	NO	NO	NO	NO	NO	NO	NO	NO

*NOTE: SEE TEMPORARY PAVEMENT DETAIL SHEET FOR ADDITIONAL INFORMATION ON TEMPORARY PAVEMENT OPTIONS

MODEL: HMA TBL [Sheet]
FILE NAME: c:\pwworkl\benesch projects\projects\d0173723\D264C24-Mt-sht-GeneralNotes.dgn

USER NAME = agibson	DESIGNED - A.GIBSON	REVISED -	STATE OF ILLINOIS DEPARTMENT OF TRANSPORTATION
	DRAWN - T.BLANK	REVISED -	
PLOT SCALE = 0.16666633 ' / in.	CHECKED - J.TARDY	REVISED -	
PLOT DATE = 2/6/2025	DATE - 02/27/24	REVISED -	

HMA TABLE AND COMMITMENTS

SCALE: SHEET 4 OF 4 SHEETS STA. TO STA.

F.A.I RTE.	SECTION	COUNTY	TOTAL SHEETS	SHEET NO.
*	(201-3)R & (4-1.5)R	WINNEBAGO	1685	6
		CONTRACT NO. 64C24		
		ILLINOIS FED. AID PROJECT		

* FAI ROUTE 39 (I-39) & FAP 301 (US 20)

CODE NO.	ITEM DESCRIPTION	UNIT	TOTAL QUANTITY	I-39, RAMP B AND RAMP D	HARRISON AVE	I-39 NB OVER CNRR	I-39 SB OVER CNRR	I-39 NB OVER UPRR	I-39 SB OVER UPRR	I-39 NB OVER HARRISON AVE	I-39 SB OVER HARRISON AVE	MADIGAN CREEK CULVERT SN 101-2053	CVP TUNNEL SN 101-1360	NOISEWALL SN 101-N7009	NOISEWALL SN 101-N7010	NOISEWALL SN 101-N7011	ROADWAY LIGHTING	TUNNEL LIGHTING	FIBER	TOLLWAY ELECTRICAL AND SIGNING	ROADWAY SIGNING
				ROADWAY	ROADWAY	BRIDGE SN 101-0208	BRIDGE SN 101-0209	BRIDGE SN 101-0210	BRIDGE SN 101-0211	BRIDGE SN 101-0213	BRIDGE SN 101-0214						I-39	CVP	I-39	I-39	I-39
				0003	0003	0010	0010	0010	0010	0010	0010	0003	0050	0020	0020	0020	0021	0021	0021	0021	0044
				87% FED 13% STATE	87% FED 13% STATE	87% FED 13% STATE	87% FED 13% STATE	87% FED 13% STATE	87% FED 13% STATE	87% FED 13% STATE	87% FED 13% STATE	87% FED 13% STATE	87% FED 13% STATE	87% FED 13% STATE	87% FED 13% STATE	87% FED 13% STATE	87% FED 13% STATE	100% VILLAGE	100% STATE	100% TOLLWAY	87% FED 13% STATE
20100110	TREE REMOVAL (6 TO 15 UNITS DIAMETER)	UNIT	161	161																	
20100210	TREE REMOVAL (OVER 15 UNITS DIAMETER)	UNIT	74	74																	
20100500	TREE REMOVAL, ACRES	ACRE	2.00	2.00																	
20200100	EARTH EXCAVATION	CU YD	125,010	120,815	650									3,545							
* 20201200	REMOVAL AND DISPOSAL OF UNSUITABLE MATERIAL	CU YD	21,160	21,160																	
20700220	POROUS GRANULAR EMBANKMENT	CU YD	4,328									2,771	1,557								
20800150	TRENCH BACKFILL	CU YD	9,163	8,771	392																
21101505	TOPSOIL EXCAVATION AND PLACEMENT	CU YD	28,686	24,797	28									1,705	2,156						
25000210	SEEDING, CLASS 2A	ACRE	11.00	11.00																	
25000310	SEEDING, CLASS 4	ACRE	16.00	16.00																	
25000312	SEEDING, CLASS 4A	ACRE	27.50	27.50																	
25000320	SEEDING, CLASS 5	ACRE	27.50	27.50																	
25000400	NITROGEN FERTILIZER NUTRIENT	POUND	4,905	4,905																	
25000500	PHOSPHORUS FERTILIZER NUTRIENT	POUND	4,905	4,905																	

* SPECIALTY ITEM
\# NON-PARTICIPATING ITEM (100% STATE)

MODEL: SOQ [Sheet]
FILE NAME: c:\pwworkr\benesch projects\projects\d0173723\D284C24-ML-sht-SOQ.dgn

benesch
Alfred Benesch & Company
35 W Wacker Drive, Suite 3300
Chicago, Illinois 60601
312-565-0450 Job No. 10800.00

USER NAME = jMajcher	DESIGNED - A.GIBSON	REVISED -	
	DRAWN - T.BLANK	REVISED -	
PLOT SCALE = 0.16666633 ' / in.	CHECKED - J.TARDY	REVISED -	
PLOT DATE = 5/13/2025	DATE - 02/27/24	REVISED -	

STATE OF ILLINOIS
DEPARTMENT OF TRANSPORTATION

SUMMARY OF QUANTITIES

SCALE: 1"=50' | SHEET 1 OF 32 SHEETS | STA. TO STA.

F.A.I RTE.	SECTION	COUNTY	TOTAL SHEETS	SHEET NO.
*	(201-3)R & (4-1.5)R	WINNEBAGO	1685	7
		CONTRACT NO. 64C24		
		ILLINOIS	FED. AID PROJECT	

* FAI ROUTE 39 (I-39) & FAP 301 (US 20) •

REV. 5/30/25

	CODE NO.	ITEM DESCRIPTION	UNIT	TOTAL QUANTITY	I-39, RAMP B AND RAMP D	HARRISON AVE	I-39 NB OVER CNRR	I-39 SB OVER CNRR	I-39 NB OVER UPRR	I-39 SB OVER UPRR	I-39 NB OVER HARRISON AVE	I-39 SB OVER HARRISON AVE						ROADWAY LIGHTING	TUNNEL LIGHTING	FIBER	TOLLWAY ELECTRICAL AND SIGNING	ROADWAY SIGNING
					ROADWAY	ROADWAY	BRIDGE SN 101-0208	BRIDGE SN 101-0209	BRIDGE SN 101-0210	BRIDGE SN 101-0211	BRIDGE SN 101-0213	BRIDGE SN 101-0214	MADIGAN CREEK CULVERT SN 101-2053	CVP TUNNEL SN 101-1360	NOISEWALL SN 101-N7009	NOISEWALL SN 101-N7010	NOISEWALL SN 101-N7011	I-39	CVP	I-39	I-39	I-39
					0003	0003	0010	0010	0010	0010	0010	0010	0003	0050	0020	0020	0020	0021	0021	0021	0021	0044
					87% FED 13% STATE	87% FED 13% STATE	87% FED 13% STATE	87% FED 13% STATE	87% FED 13% STATE	87% FED 13% STATE	87% FED 13% STATE	87% FED 13% STATE	87% FED 13% STATE	87% FED 13% STATE	87% FED 13% STATE	87% FED 13% STATE	87% FED 13% STATE	87% FED 13% STATE	100% VILLAGE	100% STATE	100% TOLLWAY	87% FED 13% STATE
	25000600	POTASSIUM FERTILIZER NUTRIENT	POUND	4,905	4,905																	
#	25000750	MOWING	ACRE	60.50	60.50																	
	25100127	MULCH, METHOD 3A	ACRE	54.25	54.25																	
	25100900	TURF REINFORCEMENT MAT	SQ YD	33,285	32,056										1,229							
	28000250	TEMPORARY EROSION CONTROL SEEDING	POUND	5,985	5,985																	
	28000305	TEMPORARY DITCH CHECKS	FOOT	2,127	2,127																	
	28000315	AGGREGATE DITCH CHECKS	TON	151	151																	
	28000400	PERIMETER EROSION BARRIER	FOOT	47,480	47,480																	
	28000500	INLET AND PIPE PROTECTION	EACH	30	30																	
	28000510	INLET FILTERS	EACH	453	453																	
	28001100	TEMPORARY EROSION CONTROL BLANKET	SQ YD	266,545	266,545																	
	28100205	STONE RIPRAP, CLASS A3	TON	490	470										20							
	20100207	STONE RIPRAP, CLASS A4	TON	722	722																	
	28100209	STONE RIPRAP, CLASS A5	TON	437	437																	

* SPECIALTY ITEM
\# NON-PARTICIPATING ITEM (100% STATE)
#FR NON-PARTICIPATING ITEM (100% FOUR RIVERS SANITARY)

MODEL: SOQ-1 [Sheet]
FILE NAME: c:\pwworkl\benesch projects\projects\d0173723\D284C24-ML-sht-SOQ.dgn

benesch
Alfred Benesch & Company
35 W Wacker Drive, Suite 3300
Chicago, Illinois 60601
312-565-0450 Job No. 10600.00

USER NAME = jMajcher	DESIGNED - A.GIBSON	REVISED -	
	DRAWN - T.BLANK	REVISED -	
PLOT SCALE = 0.16666633 ' / in.	CHECKED - J.TARDY	REVISED -	
PLOT DATE = 5/15/2025	DATE - 02/27/24	REVISED -	

STATE OF ILLINOIS
DEPARTMENT OF TRANSPORTATION

SUMMARY OF QUANTITIES

SCALE: 1"=50' | SHEET 2 OF 32 SHEETS | STA. TO STA.

F.A.I RTE.	SECTION	COUNTY	TOTAL SHEETS	SHEET NO.
*	(201-3)R & (4-1.5)R	WINNEBAGO	1685	8
		CONTRACT NO. 64C24		
		ILLINOIS	FED. AID PROJECT	

* FAI ROUTE 39 (I-39) & FAP 301 (US 20)

CODE NO.	ITEM DESCRIPTION	UNIT	TOTAL QUANTITY	I-39, RAMP B AND RAMP D	HARRISON AVE	I-39 NB OVER CNRR	I-39 SB OVER CNRR	I-39 NB OVER UPRR	I-39 SB OVER UPRR	I-39 NB OVER HARRISON AVE	I-39 SB OVER HARRISON AVE	MADIGAN CREEK CULVERT SN 101-2053	CVP TUNNEL SN 101-1360	NOISEWALL SN 101-N7009	NOISEWALL SN 101-N7010	NOISEWALL SN 101-N7011	ROADWAY LIGHTING	TUNNEL LIGHTING	FIBER	TOLLWAY ELECTRICAL AND SIGNING	ROADWAY SIGNING
				ROADWAY	ROADWAY	BRIDGE SN 101-0208	BRIDGE SN 101-0209	BRIDGE SN 101-0210	BRIDGE SN 101-0211	BRIDGE SN 101-0213	BRIDGE SN 101-0214						I-39	CVP	I-39	I-39	I-39
				0003	0003	0010	0010	0010	0010	0010	0010	0003	0050	0020	0020	0020	0021	0021	0021	0021	0044
				87% FED 13% STATE	87% FED 13% STATE	87% FED 13% STATE	87% FED 13% STATE	87% FED 13% STATE	87% FED 13% STATE	87% FED 13% STATE	87% FED 13% STATE	87% FED 13% STATE	87% FED 13% STATE	87% FED 13% STATE	87% FED 13% STATE	87% FED 13% STATE	87% FED 13% STATE	100% VILLAGE	100% STATE	100% TOLLWAY	87% FED 13% STATE
28200200	FILTER FABRIC	SQ YD	24,299	23,902	317									80							
30300001	AGGREGATE SUBGRADE IMPROVEMENT	CU YD	21,160	21,160																	
30300112	AGGREGATE SUBGRADE IMPROVEMENT 12"	SQ YD	106,692	105,057	1,635																
30300118	AGGREGATE SUBGRADE IMPROVEMENT 18"	SQ YD	52,635	52,635																	
31101400	SUBBASE GRANULAR MATERIAL, TYPE B 6"	SQ YD	293		293																
31200500	STABILIZED SUBBASE - HOT-MIX ASPHALT, 4"	SQ YD	106,251	104,692	1,559																
35100500	AGGREGATE BASE COURSE, TYPE A 6"	SQ YD	933	509	424																
40600275	BITUMINOUS MATERIALS (PRIME COAT)	POUND	240,917	236,456	4,461																
40600290	BITUMINOUS MATERIALS (TACK COAT)	POUND	24,738	24,213	447								78								
40603415	HOT-MIX ASPHALT SURFACE COURSE, IL-9.5FG, N50	TON	166	30	95								41								
42000060	WELDED WIRE REINFORCEMENT	SQ YD	2,590	2,590																	
42000080	PAVEMENT CONNECTOR (PCC) FOR BRIDGE APPROACH SLAB	SQ YD	3,876	3,876																	
42000506	PORTLAND CEMENT CONCRETE PAVEMENT 10 1/4" (JOINTED)	SQ YD	3,126	2,077	1,049																
42001300	PROTECTIVE COAT	SQ YD	171,269	169,545	1,724																

* SPECIALTY ITEM
\# NON-PARTICIPATING ITEM (100% STATE)
#FR NON-PARTICIPATING ITEM (100% FOUR RIVERS SANITARY)

MODEL: SOQ-2 [Sheet]
FILE NAME: c:\pwworld\benesch projects\projects\d0173723\D284C24-ML-sht-SOQ.dgn

benesch
Alfred Benesch & Company
35 W Wacker Drive, Suite 3300
Chicago, Illinois 60601
312-565-0450 Job No. 10800.00

USER NAME = agibson	DESIGNED - A.GIBSON	REVISED -	
	DRAWN - T.BLANK	REVISED -	
PLOT SCALE = 0.16666633 ' / in.	CHECKED - J.TARDY	REVISED -	
PLOT DATE = 2/6/2025	DATE - 02/27/24	REVISED -	

STATE OF ILLINOIS
DEPARTMENT OF TRANSPORTATION

SUMMARY OF QUANTITIES

SCALE: 1"=50' | SHEET 3 OF 32 SHEETS | STA. TO STA.

F.A.I RTE.	SECTION	COUNTY	TOTAL SHEETS	SHEET NO.
*	(201-3)R & (4-1.5)R	WINNEBAGO	1685	9
		CONTRACT NO. 64C24		
		ILLINOIS	FED. AID PROJECT	

* FAI ROUTE 39 (I-39) & FAP 301 (US 20)

CODE NO.	ITEM DESCRIPTION	UNIT	TOTAL QUANTITY	I-39, RAMP B AND RAMP D	HARRISON AVE	I-39 NB OVER CNRR	I-39 SB OVER CNRR	I-39 NB OVER UPRR	I-39 SB OVER UPRR	I-39 NB OVER HARRISON AVE	I-39 SB OVER HARRISON AVE	MADIGAN CREEK CULVERT SN 101-2053	CVP TUNNEL SN 101-1360	NOISEWALL SN 101-N7009	NOISEWALL SN 101-N7010	NOISEWALL SN 101-N7011	ROADWAY LIGHTING	TUNNEL LIGHTING	FIBER	TOLLWAY ELECTRICAL AND SIGNING	ROADWAY SIGNING
				ROADWAY	ROADWAY	BRIDGE SN 101-0208	BRIDGE SN 101-0209	BRIDGE SN 101-0210	BRIDGE SN 101-0211	BRIDGE SN 101-0213	BRIDGE SN 101-0214						I-39	CVP	I-39	I-39	I-39
				0003	0003	0010	0010	0010	0010	0010	0010	0003	0050	0020	0020	0020	0021	0021	0021	0021	0044
				87% FED 13% STATE	87% FED 13% STATE	87% FED 13% STATE	87% FED 13% STATE	87% FED 13% STATE	87% FED 13% STATE	87% FED 13% STATE	87% FED 13% STATE	87% FED 13% STATE	87% FED 13% STATE	87% FED 13% STATE	87% FED 13% STATE	87% FED 13% STATE	87% FED 13% STATE	100% VILLAGE	100% STATE	100% TOLLWAY	87% FED 13% STATE
42100350	CONTINUOUSLY REINFORCED PORTLAND CEMENT CONCRETE PAVEMENT 12 1/2"	SQ YD	93,917	93,917																	
42100615	PAVEMENT REINFORCEMENT	SQ YD	93,917	93,917																	
42101020	WIDE FLANGE BEAM TERMINAL JOINT COMPLETE 24'	EACH	2	2																	
42101030	WIDE FLANGE BEAM TERMINAL JOINT COMPLETE 36'	EACH	2	2																	
42101040	WIDE FLANGE BEAM TERMINAL JOINT COMPLETE 48'	EACH	8	8																	
42400100	PORTLAND CEMENT CONCRETE SIDEWALK 4 INCH	SQ FT	977	977																	
* 42400800	DETECTABLE WARNINGS	SQ FT	20	20																	
44000100	PAVEMENT REMOVAL	SQ YD	80,585	78,066	2,519																
44000300	CURB REMOVAL	FOOT	19	19																	
44000500	COMBINATION CURB AND GUTTER REMOVAL	FOOT	82	82																	
44000600	SIDEWALK REMOVAL	SQ FT	230	230																	
44000690	HOT-MIX ASPHALT SURFACE CORRECTION	SQ YD	84	84																	
44004250	PAVED SHOULDER REMOVAL	SQ YD	33,249	33,249																	
44201819	CLASS D PATCHES, TYPE III, 14 INCH	SQ YD	223	223																	

* SPECIALTY ITEM
\# NON-PARTICIPATING ITEM (100% STATE)
#FR NON-PARTICIPATING ITEM (100% FOUR RIVERS SANITARY)

MODEL: SOQ-3 [Sheet]
FILE NAME: c:\pwworkl\benesch projects\projects\d0173723\D284C24-ML-sht-SOQ.dgn

benesch
Alfred Benesch & Company
35 W Wacker Drive, Suite 3300
Chicago, Illinois 60601
312-565-0450 Job No. 10800.00

USER NAME = agibson	DESIGNED - A.GIBSON	REVISED -	
	DRAWN - T.BLANK	REVISED -	
PLOT SCALE = 0.16666633 ' / in.	CHECKED - J.TARDY	REVISED -	
PLOT DATE = 2/6/2025	DATE - 02/27/24	REVISED -	

STATE OF ILLINOIS
DEPARTMENT OF TRANSPORTATION

SUMMARY OF QUANTITIES

SCALE: 1"=50' | SHEET 4 OF 32 SHEETS | STA. TO STA.

F.A.I RTE.	SECTION	COUNTY	TOTAL SHEETS	SHEET NO.
*	(201-3)R & (4-1.5)R	WINNEBAGO	1685	10
		CONTRACT NO. 64C24		
		ILLINOIS	FED. AID PROJECT	

* FAI ROUTE 39 (I-39) & FAP 301 (US 20) •

REV. 5/30/25 •

CODE NO.	ITEM DESCRIPTION	UNIT	TOTAL QUANTITY	I-39, RAMP B AND RAMP D	HARRISON AVE	I-39 NB OVER CNRR	I-39 SB OVER CNRR	I-39 NB OVER UPRR	I-39 SB OVER UPRR	I-39 NB OVER HARRISON AVE	I-39 SB OVER HARRISON AVE						ROADWAY LIGHTING	TUNNEL LIGHTING	FIBER	TOLLWAY ELECTRICAL AND SIGNING	ROADWAY SIGNING
				ROADWAY	ROADWAY	BRIDGE SN 101-0208	BRIDGE SN 101-0209	BRIDGE SN 101-0210	BRIDGE SN 101-0211	BRIDGE SN 101-0213	BRIDGE SN 101-0214	MADIGAN CREEK CULVERT SN 101-2053	CVP TUNNEL SN 101-1360	NOISEWALL SN 101-N7009	NOISEWALL SN 101-N7010	NOISEWALL SN 101-N7011	I-39	CVP	I-39	I-39	I-39
				0003	0003	0010	0010	0010	0010	0010	0010	0003	0050	0020	0020	0020	0021	0021	0021	0021	0044
				87% FED 13% STATE	87% FED 13% STATE	87% FED 13% STATE	87% FED 13% STATE	87% FED 13% STATE	87% FED 13% STATE	87% FED 13% STATE	87% FED 13% STATE	87% FED 13% STATE	87% FED 13% STATE	87% FED 13% STATE	87% FED 13% STATE	87% FED 13% STATE	87% FED 13% STATE	100% VILLAGE	100% STATE	100% TOLLWAY	87% FED 13% STATE
48100500	AGGREGATE SHOULDERS, TYPE A 6"	SQ YD	2,594	2,594																	
48300505	PORTLAND CEMENT CONCRETE SHOULDERS 10 1/4"	SQ YD	1,048	1,048																	
48300710	PORTLAND CEMENT CONCRETE SHOULDERS 12 1/2"	SQ YD	48,131	48,131																	
50100300	REMOVAL OF EXISTING STRUCTURES NO. 1	EACH	1			1															
50100400	REMOVAL OF EXISTING STRUCTURES NO. 2	EACH	1				1														
50100500	REMOVAL OF EXISTING STRUCTURES NO. 3	EACH	1					1													
50100600	REMOVAL OF EXISTING STRUCTURES NO. 4	EACH	1						1												
50100700	REMOVAL OF EXISTING STRUCTURES NO. 5	EACH	1							1											
50100800	REMOVAL OF EXISTING STRUCTURES NO. 6	EACH	1								1										
50100900	REMOVAL OF EXISTING STRUCTURES NO. 7	EACH	1									1									
50101000	REMOVAL OF EXISTING STRUCTURES NO. 8	EACH	1	1																	
50101100	REMOVAL OF EXISTING STRUCTURES NO. 9	EACH	1												1						
50104400	CONCRETE HEADWALL REMOVAL	EACH	30	30																	
50104650	SLOPE WALL REMOVAL	SQ YD	1,786	110		838	838														

* SPECIALTY ITEM
\# NON-PARTICIPATING ITEM (100% STATE)
#FR NON-PARTICIPATING ITEM (100% FOUR RIVERS SANITARY)

MODEL: SOQ-4 [Sheet]
FILE NAME: c:\pwworld\benesch projects\projects\d0173723\D284C24-Ml-sht-SOQ.dgn

benesch
Alfred Benesch & Company
35 W Wacker Drive, Suite 3300
Chicago, Illinois 60601
312-565-0450 Job No. 10800.00

USER NAME = agibson	DESIGNED - A.GIBSON	REVISED -	
	DRAWN - T.BLANK	REVISED -	
PLOT SCALE = 0.16666633 ' / in.	CHECKED - J.TARDY	REVISED -	
PLOT DATE = 2/6/2025	DATE - 02/27/24	REVISED -	

STATE OF ILLINOIS
DEPARTMENT OF TRANSPORTATION

SUMMARY OF QUANTITIES

SCALE: 1"=50' | SHEET 5 OF 32 SHEETS | STA. TO STA.

F.A.I RTE.	SECTION	COUNTY	TOTAL SHEETS	SHEET NO.
*	(201-3)R & (4-1.5)R	WINNEBAGO	1685	11
		CONTRACT NO. 64C24		
		ILLINOIS	FED. AID PROJECT	

* FAI ROUTE 39 (I-39) & FAP 301 (US 20)

CODE NO.	ITEM DESCRIPTION	UNIT	TOTAL QUANTITY	I-39, RAMP B AND RAMP D	HARRISON AVE	I-39 NB OVER CNRR	I-39 SB OVER CNRR	I-39 NB OVER UPRR	I-39 SB OVER UPRR	I-39 NB OVER HARRISON AVE	I-39 SB OVER HARRISON AVE						ROADWAY LIGHTING	TUNNEL LIGHTING	FIBER	TOLLWAY ELECTRICAL AND SIGNING	ROADWAY SIGNING
				ROADWAY	ROADWAY	BRIDGE SN 101-0208	BRIDGE SN 101-0209	BRIDGE SN 101-0210	BRIDGE SN 101-0211	BRIDGE SN 101-0213	BRIDGE SN 101-0214	MADIGAN CREEK CULVERT SN 101-2053	CVP TUNNEL SN 101-1360	NOISEWALL SN 101-N7009	NOISEWALL SN 101-N7010	NOISEWALL SN 101-N7011	I-39	CVP	I-39	I-39	I-39
				0003	0003	0010	0010	0010	0010	0010	0010	0003	0050	0020	0020	0020	0021	0021	0021	0021	0044
				87% FED 13% STATE	87% FED 13% STATE	87% FED 13% STATE	87% FED 13% STATE	87% FED 13% STATE	87% FED 13% STATE	87% FED 13% STATE	87% FED 13% STATE	87% FED 13% STATE	87% FED 13% STATE	87% FED 13% STATE	87% FED 13% STATE	87% FED 13% STATE	87% FED 13% STATE	100% VILLAGE	100% STATE	100% TOLLWAY	87% FED 13% STATE
50105220	PIPE CULVERT REMOVAL	FOOT	1,943	1,943																	
50157300	PROTECTIVE SHIELD	SQ YD	5,890			287	293	1,290	1,290	1,364	1,366										
50200100	STRUCTURE EXCAVATION	CU YD	19,394			487	484	3,754	3,772	715	874	7,868	1,440								
50200400	ROCK EXCAVATION FOR STRUCTURES	CU YU	10																		10
50300225	CONCRETE STRUCTURES	CU YD	5,636.4			603.4	605.5	1,576.1	1,602.5	560.2	688.7										
50300255	CONCRETE SUPERSTRUCTURE	CU YD	3,680.2			486.6	480.4	857.3	900.9	444.6	510.4										
50300300	PROTECTIVE COAT	SQ YD	16,218			2,250	2,226	3,733	3,843	1,881	2,254									31	
50301350	CONCRETE SUPERSTRUCTURE (APPROACH SLAB)	CU YD	1,149.4			205.3	205.6	208.3	208.3	144.0	177.9										
50500305	ERECTING STRUCTURAL STEEL	L SUM	1			0.11	0.11	0.29	0.29	0.09	0.11										
50500505	STUD SHEAR CONNECTORS	EACH	74,604			10,620	10,620	15,810	15,810	9,513	12,231										
50800105	REINFORCEMENT BARS	POUND	400,470									400,470									
50800205	REINFORCEMENT BARS, EPOXY COATED	POUND	2,170,357	877		283,520	285,300	490,630	537,710	253,630	298,140	1,980								18,570	
50800515	BAR SPLICERS	EACH	8,307			1,019	1,019	1,640	1,652	1,322	1,323	412									
50800530	MECHANICAL SPLICERS	EACH	126					49	49	14	14										

* SPECIALTY ITEM
\# NON-PARTICIPATING ITEM (100% STATE)
#FR NON-PARTICIPATING ITEM (100% FOUR RIVERS SANITARY)

MODEL: SOQ-5 [Sheet]
FILE NAME: c:\pwworld\benesch projects\projects\d0173723\D284C24-ML-sht-SOQ.dgn

benesch
Alfred Benesch & Company
35 W Wacker Drive, Suite 3300
Chicago, Illinois 60601
312-565-0450 Job No. 10600.00

USER NAME = agibson	DESIGNED - A.GIBSON	REVISED -	
	DRAWN - T.BLANK	REVISED -	
PLOT SCALE = 0.16666633 ' / in.	CHECKED - J.TARDY	REVISED -	
PLOT DATE = 2/6/2025	DATE - 02/27/24	REVISED -	

STATE OF ILLINOIS
DEPARTMENT OF TRANSPORTATION

SUMMARY OF QUANTITIES

SCALE: 1"=50' | SHEET 6 OF 32 SHEETS | STA. TO STA.

F.A.I RTE.	SECTION	COUNTY	TOTAL SHEETS	SHEET NO.
*	(201-3)R & (4-1.5)R	WINNEBAGO	1685	12
		CONTRACT NO. 64C24		
		ILLINOIS	FED. AID PROJECT	

* FAI ROUTE 39 (I-39) & FAP 301 (US 20)

CODE NO.	ITEM DESCRIPTION	UNIT	TOTAL QUANTITY	I-39, RAMP B AND RAMP D	HARRISON AVE	I-39 NB OVER CNRR	I-39 SB OVER CNRR	I-39 NB OVER UPRR	I-39 SB OVER UPRR	I-39 NB OVER HARRISON AVE	I-39 SB OVER HARRISON AVE						ROADWAY LIGHTING	TUNNEL LIGHTING	FIBER	TOLLWAY ELECTRICAL AND SIGNING	ROADWAY SIGNING
				ROADWAY	ROADWAY	BRIDGE SN 101-0208	BRIDGE SN 101-0209	BRIDGE SN 101-0210	BRIDGE SN 101-0211	BRIDGE SN 101-0213	BRIDGE SN 101-0214	MADIGAN CREEK CULVERT SN 101-2053	CVP TUNNEL SN 101-1360	NOISEWALL SN 101-N7009	NOISEWALL SN 101-N7010	NOISEWALL SN 101-N7011	I-39	CVP	I-39	I-39	I-39
				0003	0003	0010	0010	0010	0010	0010	0010	0003	0050	0020	0020	0020	0021	0021	0021	0021	0044
				87% FED 13% STATE	87% FED 13% STATE	87% FED 13% STATE	87% FED 13% STATE	87% FED 13% STATE	87% FED 13% STATE	87% FED 13% STATE	87% FED 13% STATE	87% FED 13% STATE	87% FED 13% STATE	87% FED 13% STATE	87% FED 13% STATE	87% FED 13% STATE	87% FED 13% STATE	100% VILLAGE	100% STATE	100% TOLLWAY	87% FED 13% STATE
51100100	SLOPE WALL 4 INCH	SQ YD	7,503	110		1,390	1,390	1,683	1,687	558	685										
51200957	FURNISHING METAL SHELL PILES 12" X 0.250"	FOOT	4,990					2,542	2,448												
51200959	FURNISHING METAL SHELL PILES 14" X 0.312"	FOOT	6,877					1,092	3,040	1,273	1,472										
51201610	FURNISHING STEEL PILES HP12X63	FOOT	5,208			2,638	2,570														
51202305	DRIVING PILES	FOOT	17,075			2,638	2,570	3,634	5,488	1,273	1,472										
51203200	TEST PILE METAL SHELLS	EACH	20					4	6	5	5										
51203610	TEST PILE STEEL HP12X63	EACH	2				2														
51204650	PILE SHOES	EACH	616			84	82	160	160	58	72										
51500100	NAME PLATES	EACH	19	8		1	1	1	1	1	1	1	1	1	1	1					
52000030	PREFORMED JOINT SEAL 2 1/2"	FOOT	241				241														
52000110	PREFORMED JOINT STRIP SEAL	FOOT	282					141	141												
52100210	ERECTING ELASTOMERIC BEARING ASSEMBLY, TYPE I	EACH	52					10	10	14	18										
52100220	ERECTING ELASTOMERIC BEARING ASSEMBLY, TYPE II	EACH	20					10	10												
52100520	ANCHOR BOLTS, 1"	EACH	320			40	40	40	40	70	90										

* SPECIALTY ITEM
\# NON-PARTICIPATING ITEM (100% STATE)
#FR NON-PARTICIPATING ITEM (100% FOUR RIVERS SANITARY)

MODEL: SOQ-6 [Sheet]
FILE NAME: c:\pwworld\benesch projects\projects\d0173723\D284C24-ML-sht-SOQ.dgn

benesch
Alfred Benesch & Company
35 W Wacker Drive, Suite 3300
Chicago, Illinois 60601
312-565-0450 Job No. 10600.00

USER NAME = agibson	DESIGNED - A.GIBSON	REVISED -	
	DRAWN - T.BLANK	REVISED -	
PLOT SCALE = 0.16666633 ' / in.	CHECKED - J.TARDY	REVISED -	
PLOT DATE = 2/6/2025	DATE - 02/27/24	REVISED -	

STATE OF ILLINOIS
DEPARTMENT OF TRANSPORTATION

SUMMARY OF QUANTITIES

SCALE: 1"=50' | SHEET 7 OF 32 SHEETS | STA. TO STA.

F.A.I RTE.	SECTION	COUNTY	TOTAL SHEETS	SHEET NO.
*	(201-3)R & (4-1.5)R	WINNEBAGO	1685	13

CONTRACT NO. 64C24

ILLINOIS | FED. AID PROJECT

* FAI ROUTE 39 (I-39) & FAP 301 (US 20)

CODE NO.	ITEM DESCRIPTION	UNIT	TOTAL QUANTITY	I-39, RAMP B AND RAMP D	HARRISON AVE	I-39 NB OVER CNRR	I-39 SB OVER CNRR	I-39 NB OVER UPRR	I-39 SB OVER UPRR	I-39 NB OVER HARRISON AVE	I-39 SB OVER HARRISON AVE						ROADWAY LIGHTING	TUNNEL LIGHTING	FIBER	TOLLWAY ELECTRICAL AND SIGNING	ROADWAY SIGNING
				ROADWAY	ROADWAY	BRIDGE SN 101-0208	BRIDGE SN 101-0209	BRIDGE SN 101-0210	BRIDGE SN 101-0211	BRIDGE SN 101-0213	BRIDGE SN 101-0214	MADIGAN CREEK CULVERT SN 101-2053	CVP TUNNEL SN 101-1360	NOISEWALL SN 101-N7009	NOISEWALL SN 101-N7010	NOISEWALL SN 101-N7011	I-39	CVP	I-39	I-39	I-39
				0003	0003	0010	0010	0010	0010	0010	0010	0003	0050	0020	0020	0020	0021	0021	0021	0021	0044
				87% FED 13% STATE	87% FED 13% STATE	87% FED 13% STATE	87% FED 13% STATE	87% FED 13% STATE	87% FED 13% STATE	87% FED 13% STATE	87% FED 13% STATE	87% FED 13% STATE	87% FED 13% STATE	87% FED 13% STATE	87% FED 13% STATE	87% FED 13% STATE	87% FED 13% STATE	100% VILLAGE	100% STATE	100% TOLLWAY	87% FED 13% STATE
52100530	ANCHOR BOLTS, 1 1/4"	EACH	240			40	40	80	80												
52200010	TEMPORARY SHEET PILING	SQ FT	3,446			642	642			1,110	1,052										
52200020	TEMPORARY SOIL RETENTION SYSTEM	SQ FT	32,767	12,362				4,265	4,332	1,947	1,655	7,216	990								
52200600	GEOTEXTILE RETAINING WALL	SQ FT	125										125								
54001001	BOX CULVERT END SECTIONS, CULVERT NO. 1	EACH	2										2								
54002020	EXPANSION BOLTS 3/4 INCH	EACH	16	16																	
54003000	CONCRETE BOX CULVERTS	CU YD	1,332.7									1,332.7									
54011210	PRECAST CONCRETE BOX CULVERTS 12' X 10'	FOOT	193										193								
542A0229	PIPE CULVERTS, CLASS A, TYPE 1 24"	FOOT	111	111																	
542A5485	PIPE CULVERTS, CLASS A, TYPE 1 EQUIVALENT ROUND-SIZE 30"	FOOT	33	33																	
54213471	END SECTIONS 36"	EACH	1	1																	
54213483	END SECTIONS 48"	EACH	2	2																	
54213657	PRECAST REINFORCED CONCRETE FLARED END SECTIONS 12"	EACH	1	1																	
54213663	PRECAST REINFORCED CONCRETE FLARED END SECTIONS 18"	EACH	2	2																	

* SPECIALTY ITEM
\# NON-PARTICIPATING ITEM (100% STATE)
#FR NON-PARTICIPATING ITEM (100% FOUR RIVERS SANITARY)

MODEL: SOQ-7 [Sheet]
FILE NAME: c:\pwworld\benesch projects\projects\d0173723\D284C24-ML-sht-SOQ.dgn

benesch
Alfred Benesch & Company
35 W Wacker Drive, Suite 3300
Chicago, Illinois 60601
312-565-0450 Job No. 10800.00

USER NAME = agibson	DESIGNED - A.GIBSON	REVISED -	
	DRAWN - T.BLANK	REVISED -	
PLOT SCALE = 0.16666633 ' / in.	CHECKED - J.TARDY	REVISED -	
PLOT DATE = 2/6/2025	DATE - 02/27/24	REVISED -	

STATE OF ILLINOIS
DEPARTMENT OF TRANSPORTATION

SUMMARY OF QUANTITIES

SCALE: 1"=50' | SHEET 8 OF 32 SHEETS | STA. TO STA.

F.A.I RTE.	SECTION	COUNTY	TOTAL SHEETS	SHEET NO.
*	(201-3)R & (4-1.5)R	WINNEBAGO	1685	14
		CONTRACT NO. 64C24		
		ILLINOIS	FED. AID PROJECT	

* FAI ROUTE 39 (I-39) & FAP 301 (US 20)

CODE NO.	ITEM DESCRIPTION	UNIT	TOTAL QUANTITY	I-39, RAMP B AND RAMP D	HARRISON AVE	I-39 NB OVER CNRR	I-39 SB OVER CNRR	I-39 NB OVER UPRR	I-39 SB OVER UPRR	I-39 NB OVER HARRISON AVE	I-39 SB OVER HARRISON AVE	MADIGAN CREEK CULVERT SN 101-2053	CVP TUNNEL SN 101-1360	NOISEWALL SN 101-N7009	NOISEWALL SN 101-N7010	NOISEWALL SN 101-N7011	ROADWAY LIGHTING	TUNNEL LIGHTING	FIBER	TOLLWAY ELECTRICAL AND SIGNING	ROADWAY SIGNING
				ROADWAY	ROADWAY	BRIDGE SN 101-0208	BRIDGE SN 101-0209	BRIDGE SN 101-0210	BRIDGE SN 101-0211	BRIDGE SN 101-0213	BRIDGE SN 101-0214						I-39	CVP	I-39	I-39	I-39
				0003	0003	0010	0010	0010	0010	0010	0010	0003	0050	0020	0020	0020	0021	0021	0021	0021	0044
				87% FED 13% STATE	87% FED 13% STATE	87% FED 13% STATE	87% FED 13% STATE	87% FED 13% STATE	87% FED 13% STATE	87% FED 13% STATE	87% FED 13% STATE	87% FED 13% STATE	87% FED 13% STATE	87% FED 13% STATE	87% FED 13% STATE	87% FED 13% STATE	87% FED 13% STATE	100% VILLAGE	100% STATE	100% TOLLWAY	87% FED 13% STATE
54213669	PRECAST REINFORCED CONCRETE FLARED END SECTIONS 24"	EACH	20	18										2							
54213675	PRECAST REINFORCED CONCRETE FLARED END SECTIONS 30"	EACH	10	10																	
54213681	PRECAST REINFORCED CONCRETE FLARED END SECTIONS 36"	EACH	16	16																	
5424A018	PIPE CULVERTS, CLASS A, TYPE 4 18" (TEMPORARY)	FOOT	535	535																	
5424A024	PIPE CULVERTS, CLASS A, TYPE 4 24" (TEMPORARY)	FOOT	716	716																	
5424A036	PIPE CULVERTS, CLASS A, TYPE 4 36" (TEMPORARY)	FOOT	400	400																	
5424A048	PIPE CULVERTS, CLASS A, TYPE 4 48" (TEMPORARY)	FOOT	89	89																	
54248510	CONCRETE COLLAR	CU YD	5.8	5.8																	
54260315	TRAVERSABLE PIPE GRATE FOR CONCRETE END SECTION	FOOT	45	45																	
54261324	CONCRETE END SECTION, STANDARD 542001, 24", 1:3	EACH	2	2																	
54261330	CONCRETE END SECTION, STANDARD 542001, 30", 1:3	EACH	1	1																	
54261336	CONCRETE END SECTION, STANDARD 542001, 36", 1:3	EACH	1	1																	
54261384	CONCRETE END SECTION, STANDARD 542001, 84", 1:3	EACH	2	2																	
54262712	METAL FLARED END SECTIONS 12"	EACH	6	6																	

* SPECIALTY ITEM
\# NON-PARTICIPATING ITEM (100% STATE)
#FR NON-PARTICIPATING ITEM (100% FOUR RIVERS SANITARY)

MODEL: SOQ-8 [Sheet]
FILE NAME: c:\pwworld\benesch projects\projects\d0173723\D284C24-ML-sht-SOQ.dgn

benesch
Alfred Benesch & Company
35 W Wacker Drive, Suite 3300
Chicago, Illinois 60601
312-565-0450 Job No. 10800.00

USER NAME = agibson	DESIGNED - A.GIBSON	REVISED -	
	DRAWN - T.BLANK	REVISED -	
PLOT SCALE = 0.16666633 ' / in.	CHECKED - J.TARDY	REVISED -	
PLOT DATE = 2/6/2025	DATE - 02/27/24	REVISED -	

STATE OF ILLINOIS
DEPARTMENT OF TRANSPORTATION

SUMMARY OF QUANTITIES

SCALE: 1"=50' | SHEET 9 OF 32 SHEETS | STA. TO STA.

F.A.I RTE.	SECTION	COUNTY	TOTAL SHEETS	SHEET NO.
*	(201-3)R & (4-1.5)R	WINNEBAGO	1685	15
		CONTRACT NO. 64C24		
		ILLINOIS	FED. AID PROJECT	

* FAI ROUTE 39 (I-39) & FAP 301 (US 20)

CODE NO.	ITEM DESCRIPTION	UNIT	TOTAL QUANTITY	I-39, RAMP B AND RAMP D	HARRISON AVE	I-39 NB OVER CNRR	I-39 SB OVER CNRR	I-39 NB OVER UPRR	I-39 SB OVER UPRR	I-39 NB OVER HARRISON AVE	I-39 SB OVER HARRISON AVE	MADIGAN CREEK CULVERT SN 101-2053	CVP TUNNEL SN 101-1360	NOISEWALL SN 101-N7009	NOISEWALL SN 101-N7010	NOISEWALL SN 101-N7011	ROADWAY LIGHTING	TUNNEL LIGHTING	FIBER	TOLLWAY ELECTRICAL AND SIGNING	ROADWAY SIGNING
				ROADWAY	ROADWAY	BRIDGE SN 101-0208	BRIDGE SN 101-0209	BRIDGE SN 101-0210	BRIDGE SN 101-0211	BRIDGE SN 101-0213	BRIDGE SN 101-0214						I-39	CVP	I-39	I-39	I-39
				0003	0003	0010	0010	0010	0010	0010	0010	0003	0050	0020	0020	0020	0021	0021	0021	0021	0044
				87% FED 13% STATE	87% FED 13% STATE	87% FED 13% STATE	87% FED 13% STATE	87% FED 13% STATE	87% FED 13% STATE	87% FED 13% STATE	87% FED 13% STATE	87% FED 13% STATE	87% FED 13% STATE	87% FED 13% STATE	87% FED 13% STATE	87% FED 13% STATE	87% FED 13% STATE	100% VILLAGE	100% STATE	100% TOLLWAY	87% FED 13% STATE
54263330	CONCRETE END SECTION, STANDARD 542011, 30", 1:3	EACH	2	2																	
542JA024	PIPE CULVERTS, CLASS A 24" (JACKED)	FOOT	153	153																	
542JA030	PIPE CULVERTS, CLASS A 30" (JACKED)	FOOT	85	85																	
542JA036	PIPE CULVERTS, CLASS A 36" (JACKED)	FOOT	211	211																	
542JA060	PIPE CULVERTS, CLASS A 60" (JACKED)	FOOT	186	186																	
542JA084	PIPE CULVERTS, CLASS A 84" (JACKED)	FOOT	390	390																	
550A0120	STORM SEWERS, CLASS A, TYPE 1 24"	FOOT	58	58																	
550A0160	STORM SEWERS, CLASS A, TYPE 1 36"	FOOT	188	188																	
550A0190	STORM SEWERS, CLASS A, TYPE 1 48"	FOOT	16	16																	
550A0340	STORM SEWERS, CLASS A, TYPE 2 12"	FOOT	27	27																	
550A0380	STORM SEWERS, CLASS A, TYPE 2 18"	FOOT	129	129																	
550A0410	STORM SEWERS, CLASS A, TYPE 2 24"	FOOT	2,108	1,653	409									46							
550A0430	STORM SEWERS, CLASS A, TYPE 2 30"	FOOT	1,255	1,255																	
550A0450	STORM SEWERS, CLASS A, TYPE 2 36"	FOOT	3,889	3,889																	

* SPECIALTY ITEM
\# NON-PARTICIPATING ITEM (100% STATE)
#FR NON-PARTICIPATING ITEM (100% FOUR RIVERS SANITARY)

MODEL: SOQ-9 [Sheet]
FILE NAME: c:\pwworkl\benesch projects\projects\d0173723\D284C24-ML-sht-SOQ.dgn

benesch
Alfred Benesch & Company
35 W Wacker Drive, Suite 3300
Chicago, Illinois 60601
312-565-0450 Job No. 10800.00

USER NAME = agibson	DESIGNED - A.GIBSON	REVISED -	
	DRAWN - T.BLANK	REVISED -	
PLOT SCALE = 0.16666633 ' / in.	CHECKED - J.TARDY	REVISED -	
PLOT DATE = 2/6/2025	DATE - 02/27/24	REVISED -	

STATE OF ILLINOIS
DEPARTMENT OF TRANSPORTATION

SUMMARY OF QUANTITIES

SCALE: 1"=50' | SHEET 10 OF 32 SHEETS | STA. TO STA.

F.A.I RTE.	SECTION	COUNTY	TOTAL SHEETS	SHEET NO.
*	(201-3)R & (4-1.5)R	WINNEBAGO	1685	16
		CONTRACT NO. 64C24		
		ILLINOIS	FED. AID PROJECT	

* FAI ROUTE 39 (I-39) & FAP 301 (US 20)

CODE NO.	ITEM DESCRIPTION	UNIT	TOTAL QUANTITY	I-39, RAMP B AND RAMP D	HARRISON AVE	I-39 NB OVER CNRR	I-39 SB OVER CNRR	I-39 NB OVER UPRR	I-39 SB OVER UPRR	I-39 NB OVER HARRISON AVE	I-39 SB OVER HARRISON AVE						ROADWAY LIGHTING	TUNNEL LIGHTING	FIBER	TOLLWAY ELECTRICAL AND SIGNING	ROADWAY SIGNING
				ROADWAY	ROADWAY	BRIDGE SN 101-0208	BRIDGE SN 101-0209	BRIDGE SN 101-0210	BRIDGE SN 101-0211	BRIDGE SN 101-0213	BRIDGE SN 101-0214	MADIGAN CREEK CULVERT SN 101-2053	CVP TUNNEL SN 101-1360	NOISEWALL SN 101-N7009	NOISEWALL SN 101-N7010	NOISEWALL SN 101-N7011	I-39	CVP	I-39	I-39	I-39
				0003	0003	0010	0010	0010	0010	0010	0010	0003	0050	0020	0020	0020	0021	0021	0021	0021	0044
				87% FED 13% STATE	87% FED 13% STATE	87% FED 13% STATE	87% FED 13% STATE	87% FED 13% STATE	87% FED 13% STATE	87% FED 13% STATE	87% FED 13% STATE	87% FED 13% STATE	87% FED 13% STATE	87% FED 13% STATE	87% FED 13% STATE	87% FED 13% STATE	87% FED 13% STATE	100% VILLAGE	100% STATE	100% TOLLWAY	87% FED 13% STATE
550A0480	STORM SEWERS, CLASS A, TYPE 2 48"	FOOT	1,815	1,815																	
550A0500	STORM SEWERS, CLASS A, TYPE 2 60"	FOOT	268	268																	
550A0710	STORM SEWERS, CLASS A, TYPE 3 24"	FOOT	471	471																	
550A0750	STORM SEWERS, CLASS A, TYPE 3 36"	FOOT	273	273																	
550A1030	STORM SEWERS, CLASS A, TYPE 4 30"	FOOT	145	145																	
550A1280	STORM SEWERS, CLASS A, TYPE 5 24"	FOOT	18	18																	
550A1300	STORM SEWERS, CLASS A, TYPE 5 30"	FOOT	55	55																	
550A1320	STORM SEWERS, CLASS A, TYPE 5 36"	FOOT	34	34																	
550A1670	STORM SEWERS, CLASS A, TYPE 6 60"	FOOT	112	112																	
550A1710	STORM SEWERS, CLASS A, TYPE 6 84"	FOOT	264	264																	
55100700	STORM SEWER REMOVAL 15"	FOOT	837	813	24																
55101000	STORM SEWER REMOVAL 20"	FOOT	180	180																	
55101200	STORM SEWER REMOVAL 24"	FOOT	1,104	700	404																
55101600	STORM SEWER REMOVAL 36"	FOOT	321	321																	

* SPECIALTY ITEM
\# NON-PARTICIPATING ITEM (100% STATE)
#FR NON-PARTICIPATING ITEM (100% FOUR RIVERS SANITARY)

MODEL: SOQ-10 [Sheet]
FILE NAME: c:\pwworkdir\benesch projects\projects\d0173723\D284C24-MI-sht-SOQ.dgn

benesch
Alfred Benesch & Company
35 W Wacker Drive, Suite 3300
Chicago, Illinois 60601
312-565-0450 Job No. 10800.00

USER NAME = agibson	DESIGNED - A.GIBSON	REVISED -	
	DRAWN - T.BLANK	REVISED -	
PLOT SCALE = 0.16666633 ' / in.	CHECKED - J.TARDY	REVISED -	
PLOT DATE = 2/6/2025	DATE - 02/27/24	REVISED -	

STATE OF ILLINOIS
DEPARTMENT OF TRANSPORTATION

SUMMARY OF QUANTITIES

SCALE: 1"=50' | SHEET 11 OF 32 SHEETS | STA. TO STA.

F.A.I RTE.	SECTION	COUNTY	TOTAL SHEETS	SHEET NO.
*	(201-3)R & (4-1.5)R	WINNEBAGO	1685	17
		CONTRACT NO. 64C24		
	ILLINOIS	FED. AID PROJECT		

* FAI ROUTE 39 (I-39) & FAP 301 (US 20)

CODE NO.	ITEM DESCRIPTION	UNIT	TOTAL QUANTITY	I-39, RAMP B AND RAMP D	HARRISON AVE	I-39 NB OVER CNRR	I-39 SB OVER CNRR	I-39 NB OVER UPRR	I-39 SB OVER UPRR	I-39 NB OVER HARRISON AVE	I-39 SB OVER HARRISON AVE						ROADWAY LIGHTING	TUNNEL LIGHTING	FIBER	TOLLWAY ELECTRICAL AND SIGNING	ROADWAY SIGNING
				ROADWAY	ROADWAY	BRIDGE SN 101-0208	BRIDGE SN 101-0209	BRIDGE SN 101-0210	BRIDGE SN 101-0211	BRIDGE SN 101-0213	BRIDGE SN 101-0214	MADIGAN CREEK CULVERT SN 101-2053	CVP TUNNEL SN 101-1360	NOISEWALL SN 101-N7009	NOISEWALL SN 101-N7010	NOISEWALL SN 101-N7011	I-39	CVP	I-39	I-39	I-39
				0003	0003	0010	0010	0010	0010	0010	0010	0003	0050	0020	0020	0020	0021	0021	0021	0021	0044
				87% FED 13% STATE	87% FED 13% STATE	87% FED 13% STATE	87% FED 13% STATE	87% FED 13% STATE	87% FED 13% STATE	87% FED 13% STATE	87% FED 13% STATE	87% FED 13% STATE	87% FED 13% STATE	87% FED 13% STATE	87% FED 13% STATE	87% FED 13% STATE	87% FED 13% STATE	100% VILLAGE	100% STATE	100% TOLLWAY	87% FED 13% STATE
55102500	STORM SEWER REMOVAL 84"	FOOT	174	174																	
58600101	GRANULAR BACKFILL FOR STRUCTURES	CU YD	1,946			256	256	536	578	139	181										
58700300	CONCRETE SEALER	SQ FT	11,492					3,493	3,592	2,015	2,392										
59100100	GEOCOMPOSITE WALL DRAIN	SQ YD	1,832			104	104	261	273	79	101		910								
59300100	CONTROLLED LOW-STRENGTH MATERIAL	CU YD	48	48																	
60100060	CONCRETE HEADWALLS FOR PIPE DRAINS	EACH	56	56																	
60100945	PIPE DRAINS 12"	FOOT	72	72																	
60108200	PIPE UNDERDRAINS 6" (SPECIAL)	FOOT	744	744																	
60108204	PIPE UNDERDRAINS, TYPE 2, 4"	FOOT	1,564	1,564																	
60108206	PIPE UNDERDRAINS, TYPE 2, 6"	FOOT	36,295	35,701	594																
60146304	PIPE UNDERDRAINS FOR STRUCTURES 4"	FOOT	1,833			177	177	324	325	134	159		536								
60200805	CATCH BASINS, TYPE A, 4'-DIAMETER, TYPE 8 GRATE	EACH	2	2																	
60204505	CATCH BASINS, TYPE A, 5'-DIAMETER, TYPE 8 GRATE	EACH	10	10																	
60211300	CATCH BASINS, TYPE D, 3'-DIAMETER, TYPE 10 FRAME AND GRATE	EACH	3	3																	

* SPECIALTY ITEM
\# NON-PARTICIPATING ITEM (100% STATE)
#FR NON-PARTICIPATING ITEM (100% FOUR RIVERS SANITARY)

MODEL: SOQ-11 [Sheet]
FILE NAME: c:\pwworld\benesch projects\projects\d0173723\D284C24-ML-sht-SOQ.dgn

benesch
Alfred Benesch & Company
35 W Wacker Drive, Suite 3300
Chicago, Illinois 60601
312-565-0450 Job No. 10800.00

USER NAME = agibson	DESIGNED - A.GIBSON	REVISED -	
	DRAWN - T.BLANK	REVISED -	
PLOT SCALE = 0.16666633 ' / in.	CHECKED - J.TARDY	REVISED -	
PLOT DATE = 2/6/2025	DATE - 02/27/24	REVISED -	

STATE OF ILLINOIS
DEPARTMENT OF TRANSPORTATION

SUMMARY OF QUANTITIES

SCALE: 1"=50' | SHEET 12 OF 32 SHEETS | STA. TO STA.

F.A.I RTE.	SECTION	COUNTY	TOTAL SHEETS	SHEET NO.
*	(201-3)R & (4-1.5)R	WINNEBAGO	1685	18
		CONTRACT NO. 64C24		
		ILLINOIS	FED. AID PROJECT	

* FAI ROUTE 39 (I-39) & FAP 301 (US 20)

CODE NO.	ITEM DESCRIPTION	UNIT	TOTAL QUANTITY	I-39, RAMP B AND RAMP D	HARRISON AVE	I-39 NB OVER CNRR	I-39 SB OVER CNRR	I-39 NB OVER UPRR	I-39 SB OVER UPRR	I-39 NB OVER HARRISON AVE	I-39 SB OVER HARRISON AVE	MADIGAN CREEK CULVERT SN 101-2053	CVP TUNNEL SN 101-1360	NOISEWALL SN 101-N7009	NOISEWALL SN 101-N7010	NOISEWALL SN 101-N7011	ROADWAY LIGHTING	TUNNEL LIGHTING	FIBER	TOLLWAY ELECTRICAL AND SIGNING	ROADWAY SIGNING
				ROADWAY	ROADWAY	BRIDGE SN 101-0208	BRIDGE SN 101-0209	BRIDGE SN 101-0210	BRIDGE SN 101-0211	BRIDGE SN 101-0213	BRIDGE SN 101-0214						I-39	CVP	I-39	I-39	I-39
				0003	0003	0010	0010	0010	0010	0010	0010	0003	0050	0020	0020	0020	0021	0021	0021	0021	0044
				87% FED 13% STATE	87% FED 13% STATE	87% FED 13% STATE	87% FED 13% STATE	87% FED 13% STATE	87% FED 13% STATE	87% FED 13% STATE	87% FED 13% STATE	87% FED 13% STATE	87% FED 13% STATE	87% FED 13% STATE	87% FED 13% STATE	87% FED 13% STATE	87% FED 13% STATE	100% VILLAGE	100% STATE	100% TOLLWAY	87% FED 13% STATE
60211610	CATCH BASINS, TYPE D, 3'-DIAMETER, TYPE 20 FRAME AND GRATE	EACH	2	2																	
60218500	MANHOLES, TYPE A, 4'-DIAMETER, TYPE 3 FRAME AND GRATE	EACH	2		2																
60219000	MANHOLES, TYPE A, 4'-DIAMETER, TYPE 8 GRATE	EACH	2											2							
60219510	MANHOLES, TYPE A, 4'-DIAMETER, TYPE 20 FRAME AND GRATE	EACH	4	4																	
60221200	MANHOLES, TYPE A, 5'-DIAMETER, TYPE 3 FRAME AND GRATE	EACH	2		2																
60222210	MANHOLES, TYPE A, 5'-DIAMETER, TYPE 20 FRAME AND GRATE	EACH	7	7																	
60224035	MANHOLES, TYPE A, 6'-DIAMETER, TYPE 20 FRAME AND GRATE	EACH	16	16																	
60224440	MANHOLES, TYPE A, 7'-DIAMETER, TYPE 20 FRAME AND GRATE	EACH	16	16																	
60224464	MANHOLES, TYPE A, 8'-DIAMETER, TYPE 20 FRAME AND GRATE	EACH	3	3																	
60224481	MANHOLES, TYPE A, 9'-DIAMETER, TYPE 20 FRAME AND GRATE	EACH	2	2																	
60270050	DRAINAGE STRUCTURES, TYPE 4 WITH TWO TYPE 20 FRAME AND GRATES	EACH	53	53																	
60500040	REMOVING MANHOLES	EACH	6	2	4																
60500050	REMOVING CATCH BASINS	EACH	15	15																	
60500060	REMOVING INLETS	EACH	12	12																	

* SPECIALTY ITEM
\# NON-PARTICIPATING ITEM (100% STATE)
#FR NON-PARTICIPATING ITEM (100% FOUR RIVERS SANITARY)

MODEL: SOQ-12 [Sheet]
FILE NAME: c:\pwworld\benesch projects\projects\d0173723\D284C24-ML-sht-SOQ.dgn

benesch
Alfred Benesch & Company
35 W Wacker Drive, Suite 3300
Chicago, Illinois 60601
312-565-0450 Job No. 10890.00

USER NAME = agibson	DESIGNED - A.GIBSON	REVISED -	
	DRAWN - T.BLANK	REVISED -	
PLOT SCALE = 0.16666633 ' / in.	CHECKED - J.TARDY	REVISED -	
PLOT DATE = 2/6/2025	DATE - 02/27/24	REVISED -	

STATE OF ILLINOIS
DEPARTMENT OF TRANSPORTATION

SUMMARY OF QUANTITIES

SCALE: 1"=50' | SHEET 13 OF 32 SHEETS | STA. TO STA.

F.A.I RTE.	SECTION	COUNTY	TOTAL SHEETS	SHEET NO.
*	(201-3)R & (4-1.5)R	WINNEBAGO	1685	19
		CONTRACT NO. 64C24		
		ILLINOIS	FED. AID PROJECT	

* FAI ROUTE 39 (I-39) & FAP 301 (US 20)

	CODE NO.	ITEM DESCRIPTION	UNIT	TOTAL QUANTITY	I-39, RAMP B AND RAMP D	HARRISON AVE	I-39 NB OVER CNRR	I-39 SB OVER CNRR	I-39 NB OVER UPRR	I-39 SB OVER UPRR	I-39 NB OVER HARRISON AVE	I-39 SB OVER HARRISON AVE						ROADWAY LIGHTING	TUNNEL LIGHTING	FIBER	TOLLWAY ELECTRICAL AND SIGNING	ROADWAY SIGNING
					ROADWAY	ROADWAY	BRIDGE SN 101-0208	BRIDGE SN 101-0209	BRIDGE SN 101-0210	BRIDGE SN 101-0211	BRIDGE SN 101-0213	BRIDGE SN 101-0214	MADIGAN CREEK CULVERT SN 101-2053	CVP TUNNEL SN 101-1360	NOISEWALL SN 101-N7009	NOISEWALL SN 101-N7010	NOISEWALL SN 101-N7011	I-39	CVP	I-39	I-39	I-39
					0003	0003	0010	0010	0010	0010	0010	0010	0003	0050	0020	0020	0020	0021	0021	0021	0021	0044
					87% FED 13% STATE	87% FED 13% STATE	87% FED 13% STATE	87% FED 13% STATE	87% FED 13% STATE	87% FED 13% STATE	87% FED 13% STATE	87% FED 13% STATE	87% FED 13% STATE	87% FED 13% STATE	87% FED 13% STATE	87% FED 13% STATE	87% FED 13% STATE	87% FED 13% STATE	100% VILLAGE	100% STATE	100% TOLLWAY	87% FED 13% STATE
	60600095	CLASS SI CONCRETE (OUTLET)	CU YD	9.4	9.4																	
	60600605	CONCRETE CURB, TYPE B	FOOT	31	31																	
	60602500	CONCRETE GUTTER, TYPE A	FOOT	1,367	1,367																	
	60604400	COMBINATION CONCRETE CURB AND GUTTER, TYPE B-6.18	FOOT	76	76																	
	60605000	COMBINATION CONCRETE CURB AND GUTTER, TYPE B-6.24	FOOT	1,270		1,270																
	60618300	CONCRETE MEDIAN SURFACE, 4 INCH	SQ FT	293		293																
	61000115	TYPE E INLET BOX, STANDARD 610001	EACH	6	6																	
	61100605	MISCELLANEOUS CONCRETE	CU YD	25	25																	
	61133100	FIELD TILE JUNCTION VAULTS, 2' DIA.	EACH	12	12																	
	61133200	FIELD TILE JUNCTION VAULTS, 3' DIA.	EACH	12	12																	
*	63000001	STEEL PLATE BEAM GUARDRAIL, TYPE A, 6 FOOT POSTS	FOOT	8,212.5	8,100.0	112.5																
*	63100045	TRAFFIC BARRIER TERMINAL, TYPE 2	EACH	9	8	1																
*	63100070	TRAFFIC BARRIER TERMINAL, TYPE 5	EACH	7	7																	
*	63100085	TRAFFIC BARRIER TERMINAL, TYPE 6	EACH	6	6																	

* SPECIALTY ITEM
\# NON-PARTICIPATING ITEM (100% STATE)
#FR NON-PARTICIPATING ITEM (100% FOUR RIVERS SANITARY)

MODEL: SOQ-13 [Sheet]
FILE NAME: c:\pwworld\benesch projects\projects\d0173723\D284C24-ML-sht-SOQ.dgn

benesch
Alfred Benesch & Company
35 W Wacker Drive, Suite 3300
Chicago, Illinois 60601
312-565-0450 Job No. 10800.00

USER NAME = agibson	DESIGNED - A.GIBSON	REVISED -	
	DRAWN - T.BLANK	REVISED -	
PLOT SCALE = 0.16666633 ' / in.	CHECKED - J.TARDY	REVISED -	
PLOT DATE = 2/6/2025	DATE - 02/27/24	REVISED -	

STATE OF ILLINOIS
DEPARTMENT OF TRANSPORTATION

SUMMARY OF QUANTITIES

SCALE: 1"=50' | SHEET 14 OF 32 SHEETS | STA. TO STA.

F.A.I RTE.	SECTION	COUNTY	TOTAL SHEETS	SHEET NO.
*	(201-3)R & (4-1.5)R	WINNEBAGO	1685	20
		CONTRACT NO. 64C24		
		ILLINOIS	FED. AID PROJECT	

* FAI ROUTE 39 (I-39) & FAP 301 (US 20)

	CODE NO.	ITEM DESCRIPTION	UNIT	TOTAL QUANTITY	I-39, RAMP B AND RAMP D	HARRISON AVE	I-39 NB OVER CNRR	I-39 SB OVER CNRR	I-39 NB OVER UPRR	I-39 SB OVER UPRR	I-39 NB OVER HARRISON AVE	I-39 SB OVER HARRISON AVE						ROADWAY LIGHTING	TUNNEL LIGHTING	FIBER	TOLLWAY ELECTRICAL AND SIGNING	ROADWAY SIGNING
					ROADWAY	ROADWAY	BRIDGE SN 101-0208	BRIDGE SN 101-0209	BRIDGE SN 101-0210	BRIDGE SN 101-0211	BRIDGE SN 101-0213	BRIDGE SN 101-0214	MADIGAN CREEK CULVERT SN 101-2053	CVP TUNNEL SN 101-1360	NOISEWALL SN 101-N7009	NOISEWALL SN 101-N7010	NOISEWALL SN 101-N7011	I-39	CVP	I-39	I-39	I-39
					0003	0003	0010	0010	0010	0010	0010	0010	0003	0050	0020	0020	0020	0021	0021	0021	0021	0044
					87% FED 13% STATE	87% FED 13% STATE	87% FED 13% STATE	87% FED 13% STATE	87% FED 13% STATE	87% FED 13% STATE	87% FED 13% STATE	87% FED 13% STATE	87% FED 13% STATE	87% FED 13% STATE	87% FED 13% STATE	87% FED 13% STATE	87% FED 13% STATE	87% FED 13% STATE	100% VILLAGE	100% STATE	100% TOLLWAY	87% FED 13% STATE
*	63100089	TRAFFIC BARRIER TERMINAL, TYPE 6B	EACH	1	1																	
*	63100167	TRAFFIC BARRIER TERMINAL, TYPE 1 (SPECIAL) TANGENT	EACH	9	8	1																
	63200310	GUARDRAIL REMOVAL	FOOT	9,164	9,164																	
	63500105	DELINEATORS	EACH	202	202																	
	63700280	CONCRETE BARRIER, DOUBLE FACE, 44 INCH HEIGHT	FOOT	9,132	9,132																	
	63700380	CONCRETE BARRIER, VARIABLE CROSS SECTION 44 INCH HEIGHT	FOOT	828	828																	
	63700805	CONCRETE BARRIER TRANSITION	FOOT	54	54																	
	63700900	CONCRETE BARRIER BASE	FOOT	39	39																	
	64200116	SHOULDER RUMBLE STRIPS, 16 INCH	FOOT	39,707	39,707																	
	64300900	IMPACT ATTENUATORS (SEVERE USE, WIDE), TEST LEVEL 2	EACH	2		2																
	66201120	CONCRETE SHOULDER CURB	FOOT	96	96																	
*	66400305	CHAIN LINK FENCE, 6'	FOOT	8,234	8,234																	
*	66407500	CHAIN LINK GATES, 6' X 10' DOUBLE	EACH	4	4																	
*	66600105	FURNISHING AND ERECTING RIGHT OF WAY MARKERS	EACH	35	35																	

*a BASED ON DISCUSSIONS WITH DISTRICT PERSONNEL, DISTRICT 2 AGREES THAT MOST OF THE MATERIAL CLASSIFIED AS 669.05(a)(1), 669.05(a)(2), 669.05(a)(3), 669.05(b)(1) AND 669.05(c) DOES NOT CONSTITUTE A SERIOUS ENVIRONMENTAL CONCERN AND THE MATERIAL SHALL BE REUSED ONSITE AS EMBANKMENT OR FILL IN ACCORDANCE WITH THE SPECIAL PROVISIONS INCLUDED IN THE PLANS. THE DISTRICT HAS COMMITTED TO PLACING APPROXIMATELY 102,331 CUBIC YARDS OF REGULATED SUBSTANCES MATERIAL CLASSIFIED AS 669.05(a)(1), 669.05(a)(2), 669.05(a)(3), 669.05(b)(1) AND 669.05(c) ALONG THE INTERSTATE AS FILL OR EMBANKMENT WITHIN THE PROJECT LIMITS. IF PLANS FOR THIS PROJECT CHANGE AND MATERIAL CLASSIFIED AS 669.05(a)(2), 669.05(a)(3), 669.05(b)(1) AND 669.05(c) IS TO BE REMOVED, THE REGULATED SUBSTANCES MATERIAL REFERENCED WILL NEED TO BE MANAGED USING ARTICLE 109.04 AS NON-SPECIAL WASTE. THE INTENT OF THE COMMITMENT IS NOT COVERED BY SECTION 202.

* SPECIALTY ITEM
\# NON-PARTICIPATING ITEM (100% STATE)
#FR NON-PARTICIPATING ITEM (100% FOUR RIVERS SANITARY)

MODEL: SOQ-14 [Sheet]
FILE NAME: c:\pwworld\benesch projects\projects\d0173723\D264C24-ML-sht-SOQ.dgn

benesch
Alfred Benesch & Company
35 W Wacker Drive, Suite 3300
Chicago, Illinois 60601
312-565-0450 Job No. 10890.00

USER NAME = agibson	DESIGNED - A.GIBSON	REVISED -	
	DRAWN - T.BLANK	REVISED -	
PLOT SCALE = 0.16666633 ' / in.	CHECKED - J.TARDY	REVISED -	
PLOT DATE = 2/6/2025	DATE - 02/27/24	REVISED -	

STATE OF ILLINOIS
DEPARTMENT OF TRANSPORTATION

SUMMARY OF QUANTITIES

SCALE: 1"=50' | SHEET 15 OF 32 SHEETS | STA. TO STA.

F.A.I RTE.	SECTION	COUNTY	TOTAL SHEETS	SHEET NO.
*	(201-3)R & (4-1.5)R	WINNEBAGO	1685	21
		CONTRACT NO. 64C24		
	ILLINOIS	FED. AID PROJECT		

* FAI ROUTE 39 (I-39) & FAP 301 (US 20) •

REV. 5/30/25

	CODE NO.	ITEM DESCRIPTION	UNIT	TOTAL QUANTITY	I-39, RAMP B AND RAMP D	HARRISON AVE	I-39 NB OVER CNRR	I-39 SB OVER CNRR	I-39 NB OVER UPRR	I-39 SB OVER UPRR	I-39 NB OVER HARRISON AVE	I-39 SB OVER HARRISON AVE						ROADWAY LIGHTING	TUNNEL LIGHTING	FIBER	TOLLWAY ELECTRICAL AND SIGNING	ROADWAY SIGNING
					ROADWAY	ROADWAY	BRIDGE SN 101-0208	BRIDGE SN 101-0209	BRIDGE SN 101-0210	BRIDGE SN 101-0211	BRIDGE SN 101-0213	BRIDGE SN 101-0214	MADIGAN CREEK CULVERT SN 101-2053	CVP TUNNEL SN 101-1360	NOISEWALL SN 101-N7009	NOISEWALL SN 101-N7010	NOISEWALL SN 101-N7011	I-39	CVP	I-39	I-39	I-39
					0003	0003	0010	0010	0010	0010	0010	0010	0003	0050	0020	0020	0020	0021	0021	0021	0021	0044
					87% FED 13% STATE	87% FED 13% STATE	87% FED 13% STATE	87% FED 13% STATE	87% FED 13% STATE	87% FED 13% STATE	87% FED 13% STATE	87% FED 13% STATE	87% FED 13% STATE	87% FED 13% STATE	87% FED 13% STATE	87% FED 13% STATE	87% FED 13% STATE	87% FED 13% STATE	100% VILLAGE	100% STATE	100% TOLLWAY	87% FED 13% STATE
*	66700305	PERMANENT SURVEY MARKERS, TYPE II	EACH	9	9																	
*a	66900200	NON-SPECIAL WASTE DISPOSAL	CU YD	1,867	1,867																	
*	66900530	SOIL DISPOSAL ANALYSIS	EACH	1	1																	
*	66901001	REGULATED SUBSTANCES PRE-CONSTRUCTION PLAN	L SUM	1	1																	
*	66901003	REGULATED SUBSTANCES FINAL CONSTRUCTION REPORT	L SUM	1	1																	
*	66901006	REGULATED SUBSTANCES MONITORING	CAL DA	175	175																	
	67100100	MOBILIZATION	L SUM	1	1																	
	70100207	TRAFFIC CONTROL AND PROTECTION, STANDARD 701402	EACH	8	8																	
	70100420	TRAFFIC CONTROL AND PROTECTION, STANDARD 701411	EACH	5	5																	
	70100700	TRAFFIC CONTROL AND PROTECTION, STANDARD 701406	L SUM	1	1																	
	70100800	TRAFFIC CONTROL AND PROTECTION, STANDARD 701401	L SUM	1	1																	
	70100815	TRAFFIC CONTROL AND PROTECTION, STANDARD 701446	L SUM	1	1																	
	70100825	TRAFFIC CONTROL AND PROTECTION, STANDARD 701456	L SUM	1	1																	
	70102620	TRAFFIC CONTROL AND PROTECTION, STANDARD 701501	L SUM	1	1																	

* SPECIALTY ITEM
\# NON-PARTICIPATING ITEM (100% STATE)
#FR NON-PARTICIPATING ITEM (100% FOUR RIVERS SANITARY)

MODEL: SOQ-15 [Sheet]
FILE NAME: c:\pwworld\benesch projects\projects\d0173723\D284C24-ML-sht-SOQ.dgn

benesch
Alfred Benesch & Company
35 W Wacker Drive, Suite 3300
Chicago, Illinois 60601
312-565-0450 Job No. 10800.00

USER NAME = agibson	DESIGNED - A.GIBSON	REVISED -	
	DRAWN - T.BLANK	REVISED -	
PLOT SCALE = 0.16666633 ' / in.	CHECKED - J.TARDY	REVISED -	
PLOT DATE = 2/6/2025	DATE - 02/27/24	REVISED -	

STATE OF ILLINOIS
DEPARTMENT OF TRANSPORTATION

SUMMARY OF QUANTITIES

SCALE: 1"=50' | SHEET 16 OF 32 SHEETS | STA. TO STA.

F.A.I RTE.	SECTION	COUNTY	TOTAL SHEETS	SHEET NO.
*	(201-3)R & (4-1.5)R	WINNEBAGO	1685	22
		CONTRACT NO. 64C24		
		ILLINOIS	FED. AID PROJECT	

* FAI ROUTE 39 (I-39) & FAP 301 (US 20)

CODE NO.	ITEM DESCRIPTION	UNIT	TOTAL QUANTITY	I-39, RAMP B AND RAMP D	HARRISON AVE	I-39 NB OVER CNRR	I-39 SB OVER CNRR	I-39 NB OVER UPRR	I-39 SB OVER UPRR	I-39 NB OVER HARRISON AVE	I-39 SB OVER HARRISON AVE						ROADWAY LIGHTING	TUNNEL LIGHTING	FIBER	TOLLWAY ELECTRICAL AND SIGNING	ROADWAY SIGNING
				ROADWAY	ROADWAY	BRIDGE SN 101-0208	BRIDGE SN 101-0209	BRIDGE SN 101-0210	BRIDGE SN 101-0211	BRIDGE SN 101-0213	BRIDGE SN 101-0214	MADIGAN CREEK CULVERT SN 101-2053	CVP TUNNEL SN 101-1360	NOISEWALL SN 101-N7009	NOISEWALL SN 101-N7010	NOISEWALL SN 101-N7011	I-39	CVP	I-39	I-39	I-39
				0003	0003	0010	0010	0010	0010	0010	0010	0003	0050	0020	0020	0020	0021	0021	0021	0021	0044
				87% FED 13% STATE	87% FED 13% STATE	87% FED 13% STATE	87% FED 13% STATE	87% FED 13% STATE	87% FED 13% STATE	87% FED 13% STATE	87% FED 13% STATE	87% FED 13% STATE	87% FED 13% STATE	87% FED 13% STATE	87% FED 13% STATE	87% FED 13% STATE	87% FED 13% STATE	100% VILLAGE	100% STATE	100% TOLLWAY	87% FED 13% STATE
70102625	TRAFFIC CONTROL AND PROTECTION, STANDARD 701606	L SUM	1		1																
70102630	TRAFFIC CONTROL AND PROTECTION, STANDARD 701601	L SUM	1		1																
70102635	TRAFFIC CONTROL AND PROTECTION, STANDARD 701701	L SUM	1		1																
70102640	TRAFFIC CONTROL AND PROTECTION, STANDARD 701801	L SUM	1		1																
70103815	TRAFFIC CONTROL SURVEILLANCE	CAL DA	39	39																	
70107025	CHANGEABLE MESSAGE SIGN	CAL DA	280	210	70																
70200100	NIGHTTIME WORK ZONE LIGHTING	L SUM	1	1																	
70303100	TEMPORARY PAVEMENT MARKING LETTERS AND SYMBOLS - MODIFIED URETHANE	SQ FT	168	168																	
70303120	TEMPORARY PAVEMENT MARKING - LINE 4" - MODIFIED URETHANE	FOOT	227,976	222,489	5,487																
70303130	TEMPORARY PAVEMENT MARKING - LINE 6" - MODIFIED URETHANE	FOOT	30,755	29,682	1,073																
70303140	TEMPORARY PAVEMENT MARKING - LINE 8" - MODIFIED URETHANE	FOOT	108	108																	
70303160	TEMPORARY PAVEMENT MARKING - LINE 12"- MODIFIED URETHANE	FOOT	970	970																	
70400100	TEMPORARY CONCRETE BARRIER	FOOT	48,900.0	47,437.5	1,462.5																
70400125	PINNING TEMPORARY CONCRETE BARRIER	EACH	6,287	6,065	222																

* SPECIALTY ITEM
\# NON-PARTICIPATING ITEM (100% STATE)
#FR NON-PARTICIPATING ITEM (100% FOUR RIVERS SANITARY)

MODEL: SOQ-16 [Sheet]
FILE NAME: c:\pwworld\benesch projects\projects\d0173723\D284C24-ML-sht-SOQ.dgn

benesch
Alfred Benesch & Company
35 W Wacker Drive, Suite 3300
Chicago, Illinois 60601
312-565-6450 Job No. 10800.00

USER NAME = agibson	DESIGNED - A.GIBSON	REVISED -	
	DRAWN - T.BLANK	REVISED -	
PLOT SCALE = 0.16666633 ' / in.	CHECKED - J.TARDY	REVISED -	
PLOT DATE = 2/6/2025	DATE - 02/27/24	REVISED -	

STATE OF ILLINOIS
DEPARTMENT OF TRANSPORTATION

SUMMARY OF QUANTITIES

SCALE: 1"=50' | SHEET 17 OF 32 SHEETS | STA. TO STA.

F.A.I RTE.	SECTION	COUNTY	TOTAL SHEETS	SHEET NO.
*	(201-3)R & (4-1.5)R	WINNEBAGO	1685	23
		CONTRACT NO. 64C24		
		ILLINOIS	FED. AID PROJECT	

* FAI ROUTE 39 (I-39) & FAP 301 (US 20)

	CODE NO.	ITEM DESCRIPTION	UNIT	TOTAL QUANTITY	I-39, RAMP B AND RAMP D	HARRISON AVE	I-39 NB OVER CNRR	I-39 SB OVER CNRR	I-39 NB OVER UPRR	I-39 SB OVER UPRR	I-39 NB OVER HARRISON AVE	I-39 SB OVER HARRISON AVE						ROADWAY LIGHTING	TUNNEL LIGHTING	FIBER	TOLLWAY ELECTRICAL AND SIGNING	ROADWAY SIGNING
					ROADWAY	ROADWAY	BRIDGE SN 101-0208	BRIDGE SN 101-0209	BRIDGE SN 101-0210	BRIDGE SN 101-0211	BRIDGE SN 101-0213	BRIDGE SN 101-0214	MADIGAN CREEK CULVERT SN 101-2053	CVP TUNNEL SN 101-1360	NOISEWALL SN 101-N7009	NOISEWALL SN 101-N7010	NOISEWALL SN 101-N7011	I-39	CVP	I-39	I-39	I-39
					0003	0003	0010	0010	0010	0010	0010	0010	0003	0050	0020	0020	0020	0021	0021	0021	0021	0044
					87% FED 13% STATE	87% FED 13% STATE	87% FED 13% STATE	87% FED 13% STATE	87% FED 13% STATE	87% FED 13% STATE	87% FED 13% STATE	87% FED 13% STATE	87% FED 13% STATE	87% FED 13% STATE	87% FED 13% STATE	87% FED 13% STATE	87% FED 13% STATE	87% FED 13% STATE	100% VILLAGE	100% STATE	100% TOLLWAY	87% FED 13% STATE
	70400200	RELOCATE TEMPORARY CONCRETE BARRIER	FOOT	18,288	17,213	1,075																
	70600250	IMPACT ATTENUATORS, TEMPORARY (NON- REDIRECTIVE), TEST LEVEL 3	EACH	15	12	3																
	70600260	IMPACT ATTENUATORS, TEMPORARY (FULLY REDIRECTIVE, NARROW), TEST LEVEL 3	EACH	9	9																	
	70600332	IMPACT ATTENUATORS, RELOCATE (FULLY REDIRECTIVE, NARROW), TEST LEVEL 3	EACH	2	2																	
	70600350	IMPACT ATTENUATORS, RELOCATE (NON- REDIRECTIVE), TEST LEVEL 3	EACH	13	11	2																
*	72000100	SIGN PANEL - TYPE 1	SQ FT	71																		71
*	72000200	SIGN PANEL - TYPE 2	SQ FT	198																		198
*	72000300	SIGN PANEL - TYPE 3	SQ FT	5,746																		5,746
*	72100100	SIGN PANEL OVERLAY	SQ FT	352	352																	
*	72400310	REMOVE SIGN PANEL - TYPE 1	SQ FT	120																		120
*	72400320	REMOVE SIGN PANEL - TYPE 2	SQ FT	125																		125
*	72400330	REMOVE SIGN PANEL - TYPE 3	SQ FT	2,069																		2,069
*	72400730	RELOCATE SIGN PANEL - TYPE 3	SQ FT	384	384																	
*	72501000	TERMINAL MARKER - DIRECT APPLIED	EACH	9	8	1																

* SPECIALTY ITEM
\# NON-PARTICIPATING ITEM (100% STATE)
#FR NON-PARTICIPATING ITEM (100% FOUR RIVERS SANITARY)

MODEL: SOQ-17 [Sheet]
FILE NAME: c:\pwworld\benesch projects\projects\d0173723\D284C24-ML-sht-SOQ.dgn

benesch
Alfred Benesch & Company
35 W Wacker Drive, Suite 3300
Chicago, Illinois 60601
312-565-0450 Job No. 10800.00

USER NAME = agibson	DESIGNED - A.GIBSON	REVISED -	
	DRAWN - T.BLANK	REVISED -	
PLOT SCALE = 0.16666633 ' / in.	CHECKED - J.TARDY	REVISED -	
PLOT DATE = 2/6/2025	DATE - 02/27/24	REVISED -	

STATE OF ILLINOIS
DEPARTMENT OF TRANSPORTATION

SUMMARY OF QUANTITIES

SCALE: 1"=50' | SHEET 18 OF 32 SHEETS | STA. TO STA.

F.A.I RTE.	SECTION	COUNTY	TOTAL SHEETS	SHEET NO.
*	(201-3)R & (4-1.5)R	WINNEBAGO	1685	24
		CONTRACT NO. 64C24		
	ILLINOIS	FED. AID PROJECT		

* FAI ROUTE 39 (I-39) & FAP 301 (US 20)

	CODE NO.	ITEM DESCRIPTION	UNIT	TOTAL QUANTITY	I-39, RAMP B AND RAMP D	HARRISON AVE	I-39 NB OVER CNRR	I-39 SB OVER CNRR	I-39 NB OVER UPRR	I-39 SB OVER UPRR	I-39 NB OVER HARRISON AVE	I-39 SB OVER HARRISON AVE	MADIGAN CREEK CULVERT SN 101-2053	CVP TUNNEL SN 101-1360	NOISEWALL SN 101-N7009	NOISEWALL SN 101-N7010	NOISEWALL SN 101-N7011	ROADWAY LIGHTING	TUNNEL LIGHTING	FIBER	TOLLWAY ELECTRICAL AND SIGNING	ROADWAY SIGNING
					ROADWAY	ROADWAY	BRIDGE SN 101-0208	BRIDGE SN 101-0209	BRIDGE SN 101-0210	BRIDGE SN 101-0211	BRIDGE SN 101-0213	BRIDGE SN 101-0214						I-39	CVP	I-39	I-39	I-39
					0003	0003	0010	0010	0010	0010	0010	0010	0003	0050	0020	0020	0020	0021	0021	0021	0021	0044
					87% FED 13% STATE	87% FED 13% STATE	87% FED 13% STATE	87% FED 13% STATE	87% FED 13% STATE	87% FED 13% STATE	87% FED 13% STATE	87% FED 13% STATE	87% FED 13% STATE	87% FED 13% STATE	87% FED 13% STATE	87% FED 13% STATE	87% FED 13% STATE	87% FED 13% STATE	100% VILLAGE	100% STATE	100% TOLLWAY	87% FED 13% STATE
*	72700100	STRUCTURAL STEEL SIGN SUPPORT - BREAKAWAY	POUND	10,150	4,108																	6,042
*	72800100	TELESCOPING STEEL SIGN SUPPORT	FOOT	478																		478
*	73000100	WOOD SIGN SUPPORT	FOOT	388																		388
*	73300100	OVERHEAD SIGN STRUCTURE - SPAN, TYPE I-A (4'-0" X 4'-6")	FOOT	280																		280
*	73300200	OVERHEAD SIGN STRUCTURE - SPAN, TYPE II-A (4'-6" X 5'-3")	FOOT	430																		430
*	73300300	OVERHEAD SIGN STRUCTURE - SPAN, TYPE III-A (5'-0" X 7'-0")	FOOT	90																		90
*	73301810	OVERHEAD SIGN STRUCTURE WALKWAY, TYPE A	FOOT	14.5																		14.5
*	73302210	OVERHEAD SIGN STRUCTURE - CANTILEVER, TYPE III-C-A (36" X 7'-0")	FOOT	75																		75
	73400100	CONCRETE FOUNDATIONS	CU YD	16	8																	8
*	73400200	DRILLED SHAFT CONCRETE FOUNDATIONS	CU YD	285.5																		285.5
	73600100	REMOVE OVERHEAD SIGN STRUCTURE - SPAN	EACH	5																		5
	73700100	REMOVE GROUND MOUNTED SIGN SUPPORT	EACH	30	6																	24
	73700200	REMOVE CONCRETE FOUNDATION - GROUND MOUNT	EACH	30	6																	24
	73700300	REMOVE CONCRETE FOUNDATION - OVERHEAD	EACH	20																		20

* SPECIALTY ITEM
\# NON-PARTICIPATING ITEM (100% STATE)
#FR NON-PARTICIPATING ITEM (100% FOUR RIVERS SANITARY)

MODEL: SOQ-18 [Sheet]
FILE NAME: c:\pwworld\benesch projects\projects\d0173723\D284C24-ML-sht-SOQ.dgn

benesch
Alfred Benesch & Company
35 W Wacker Drive, Suite 3300
Chicago, Illinois 60601
312-565-0450 Job No. 10800.00

USER NAME = agibson	DESIGNED - A.GIBSON	REVISED -
	DRAWN - T.BLANK	REVISED -
PLOT SCALE = 0.16666633 ' / in.	CHECKED - J.TARDY	REVISED -
PLOT DATE = 2/6/2025	DATE - 02/27/24	REVISED -

STATE OF ILLINOIS
DEPARTMENT OF TRANSPORTATION

SUMMARY OF QUANTITIES

SCALE: 1"=50' | SHEET 19 OF 32 SHEETS | STA. TO STA.

F.A.I RTE.	SECTION	COUNTY	TOTAL SHEETS	SHEET NO.
*	(201-3)R & (4-1.5)R	WINNEBAGO	1685	25
		CONTRACT NO. 64C24		
		ILLINOIS	FED. AID PROJECT	

* FAI ROUTE 39 (I-39) & FAP 301 (US 20)

	CODE NO.	ITEM DESCRIPTION	UNIT	TOTAL QUANTITY	I-39, RAMP B AND RAMP D	HARRISON AVE	I-39 NB OVER CNRR	I-39 SB OVER CNRR	I-39 NB OVER UPRR	I-39 SB OVER UPRR	I-39 NB OVER HARRISON AVE	I-39 SB OVER HARRISON AVE	MADIGAN CREEK CULVERT SN 101-2053	CVP TUNNEL SN 101-1360	NOISEWALL SN 101-N7009	NOISEWALL SN 101-N7010	NOISEWALL SN 101-N7011	ROADWAY LIGHTING	TUNNEL LIGHTING	FIBER	TOLLWAY ELECTRICAL AND SIGNING	ROADWAY SIGNING
					ROADWAY	ROADWAY	BRIDGE SN 101-0208	BRIDGE SN 101-0209	BRIDGE SN 101-0210	BRIDGE SN 101-0211	BRIDGE SN 101-0213	BRIDGE SN 101-0214						I-39	CVP	I-39	I-39	I-39
					0003	0003	0010	0010	0010	0010	0010	0010	0003	0050	0020	0020	0020	0021	0021	0021	0021	0044
					87% FED 13% STATE	87% FED 13% STATE	87% FED 13% STATE	87% FED 13% STATE	87% FED 13% STATE	87% FED 13% STATE	87% FED 13% STATE	87% FED 13% STATE	87% FED 13% STATE	87% FED 13% STATE	87% FED 13% STATE	87% FED 13% STATE	87% FED 13% STATE	87% FED 13% STATE	100% VILLAGE	100% STATE	100% TOLLWAY	87% FED 13% STATE
	73800005	REMOVE STRUCTURAL STEEL SUPPORT FOR OVERHEAD SIGN STRUCTURE - SPAN	EACH	10																		10
*	78004600	PREFORMED PLASTIC PAVEMENT MARKING, TYPE D - STANDARD - LETTERS AND SYMBOLS	SQ FT	252		252																
*	78004620	PREFORMED PLASTIC PAVEMENT MARKING, TYPE D - STANDARD - LINE 4"	FOOT	3,229		3,229																
*	78004640	PREFORMED PLASTIC PAVEMENT MARKING, TYPE D - STANDARD - LINE 8"	FOOT	86	86																	
*	78004645	PREFORMED PLASTIC PAVEMENT MARKING, TYPE D - STANDARD - LINE 9"	FOOT	20,171	18,751	1,420																
*	78004655	PREFORMED PLASTIC PAVEMENT MARKING, TYPE D - STANDARD - LINE 11"	FOOT	17,457	17,020	437																
*	78004660	PREFORMED PLASTIC PAVEMENT MARKING, TYPE D - STANDARD - LINE 12"	FOOT	3,012	3,012																	
*	78004720	PREFORMED PLASTIC PAVEMENT MARKING, TYPE D - STANDARD - LINE 24"	FOOT	138	74	64																
*	78006100	PREFORMED THERMOPLASTIC PAVEMENT MARKING - LETTERS AND SYMBOLS	SQ FT	2,568	2,568																	
*	78009004	MODIFIED URETHANE PAVEMENT MARKING - LINE 4"	FOOT	79,086	79,086																	
*	78009006	MODIFIED URETHANE PAVEMENT MARKING - LINE 6"	FOOT	1,121	1,121																	
*	78009008	MODIFIED URETHANE PAVEMENT MARKING - LINE 8"	FOOT	1,744	1,744																	
*	78009012	MODIFIED URETHANE PAVEMENT MARKING - LINE 12"	FOOT	1,753	1,753																	
*	78011000	GROOVING FOR RECESSED PAVEMENT MARKING, LETTERS AND SYMBOLS	SQ FT	3,097	2,820	277																

* SPECIALTY ITEM
\# NON-PARTICIPATING ITEM (100% STATE)
#FR NON-PARTICIPATING ITEM (100% FOUR RIVERS SANITARY)

MODEL: SOQ-19 [Sheet]
FILE NAME: c:\pwworld\benesch projects\projects\d0173723\D284C24-ML-sht-SOQ.dgn

benesch
Alfred Benesch & Company
35 W Wacker Drive, Suite 3300
Chicago, Illinois 60601
312-565-0450 Job No. 10800.00

USER NAME = jMajcher	DESIGNED - A.GIBSON	REVISED -	
	DRAWN - T.BLANK	REVISED -	
PLOT SCALE = 0.16666633 ' / in.	CHECKED - J.TARDY	REVISED -	
PLOT DATE = 5/15/2025	DATE - 02/27/24	REVISED -	

STATE OF ILLINOIS
DEPARTMENT OF TRANSPORTATION

SUMMARY OF QUANTITIES

SCALE: 1"=50' | SHEET 20 OF 32 SHEETS | STA. TO STA.

F.A.I RTE.	SECTION	COUNTY	TOTAL SHEETS	SHEET NO.
*	(201-3)R & (4-1.5)R	WINNEBAGO	1685	26
		CONTRACT NO. 64C24		
		ILLINOIS	FED. AID PROJECT	

* FAI ROUTE 39 (I-39) & FAP 301 (US 20)

	CODE NO.	ITEM DESCRIPTION	UNIT	TOTAL QUANTITY	I-39, RAMP B AND RAMP D	HARRISON AVE	I-39 NB OVER CNRR	I-39 SB OVER CNRR	I-39 NB OVER UPRR	I-39 SB OVER UPRR	I-39 NB OVER HARRISON AVE	I-39 SB OVER HARRISON AVE	MADIGAN CREEK CULVERT SN 101-2053	CVP TUNNEL SN 101-1360	NOISEWALL SN 101-N7009	NOISEWALL SN 101-N7010	NOISEWALL SN 101-N7011	ROADWAY LIGHTING	TUNNEL LIGHTING	FIBER	TOLLWAY ELECTRICAL AND SIGNING	ROADWAY SIGNING
					ROADWAY	ROADWAY	BRIDGE SN 101-0208	BRIDGE SN 101-0209	BRIDGE SN 101-0210	BRIDGE SN 101-0211	BRIDGE SN 101-0213	BRIDGE SN 101-0214						I-39	CVP	I-39	I-39	I-39
					0003	0003	0010	0010	0010	0010	0010	0010	0003	0050	0020	0020	0020	0021	0021	0021	0021	0044
					87% FED 13% STATE	87% FED 13% STATE	87% FED 13% STATE	87% FED 13% STATE	87% FED 13% STATE	87% FED 13% STATE	87% FED 13% STATE	87% FED 13% STATE	87% FED 13% STATE	87% FED 13% STATE	87% FED 13% STATE	87% FED 13% STATE	87% FED 13% STATE	87% FED 13% STATE	100% VILLAGE	100% STATE	100% TOLLWAY	87% FED 13% STATE
*	78011025	GROOVING FOR RECESSED PAVEMENT MARKING 5"	FOOT	82,315	79,086	3,229																
*	78011035	GROOVING FOR RECESSED PAVEMENT MARKING 7"	FOOT	1,121	1,121																	
*	78011045	GROOVING FOR RECESSED PAVEMENT MARKING 9"	FOOT	1,830	1,830																	
*	78011050	GROOVING FOR RECESSED PAVEMENT MARKING 10"	FOOT	20,171	18,751	1,420																
*	78011060	GROOVING FOR RECESSED PAVEMENT MARKING 12"	FOOT	17,457	17,020	437																
*	78011065	GROOVING FOR RECESSED PAVEMENT MARKING 13"	FOOT	4,838	4,838																	
*	78011125	GROOVING FOR RECESSED PAVEMENT MARKING 25"	FOOT	138	74	64																
*	78100100	RAISED REFLECTIVE PAVEMENT MARKER	EACH	2,501	2,451	50																
	78100200	TEMPORARY RAISED REFLECTIVE PAVEMENT MARKER	EACH	3,007	3,007																	
	78300201	PAVEMENT MARKING REMOVAL - GRINDING	SQ FT	30,052	30,052																	
	78300202	PAVEMENT MARKING REMOVAL - WATER BLASTING	SQ FT	60,948	58,612	2,336																
*	81028260	UNDERGROUND CONDUIT, GALVANIZED STEEL, 6" DIA.	FOOT	1,349																1,349		
*	81028370	UNDERGROUND CONDUIT, PVC, 3" DIA.	FOOT	104														92	12			
*	81028750	UNDERGROUND CONDUIT, COILABLE NONMETALLIC CONDUIT, 2" DIA.	FOOT	1,470																1,470		

* SPECIALTY ITEM
\# NON-PARTICIPATING ITEM (100% STATE)
#FR NON-PARTICIPATING ITEM (100% FOUR RIVERS SANITARY)

MODEL: SOQ-20 [Sheet]
FILE NAME: c:\pwworld\benesch projects\projects\d0173723\D284C24-ML-sht-SOQ.dgn

benesch
Alfred Benesch & Company
35 W Wacker Drive, Suite 3300
Chicago, Illinois 60601
312-565-0450 Job No. 10800.00

USER NAME = agibson	DESIGNED - A.GIBSON	REVISED -	
	DRAWN - T.BLANK	REVISED -	
PLOT SCALE = 0.16666633 ' / in.	CHECKED - J.TARDY	REVISED -	
PLOT DATE = 2/6/2025	DATE - 02/27/24	REVISED -	

STATE OF ILLINOIS
DEPARTMENT OF TRANSPORTATION

SUMMARY OF QUANTITIES

SCALE: 1"=50' | SHEET 21 OF 32 SHEETS | STA. TO STA.

F.A.I RTE.	SECTION	COUNTY	TOTAL SHEETS	SHEET NO.
*	(201-3)R & (4-1.5)R	WINNEBAGO	1685	27
		CONTRACT NO. 64C24		
		ILLINOIS	FED. AID PROJECT	

* FAI ROUTE 39 (I-39) & FAP 301 (US 20)

	CODE NO.	ITEM DESCRIPTION	UNIT	TOTAL QUANTITY	I-39, RAMP B AND RAMP D	HARRISON AVE	I-39 NB OVER CNRR	I-39 SB OVER CNRR	I-39 NB OVER UPRR	I-39 SB OVER UPRR	I-39 NB OVER HARRISON AVE	I-39 SB OVER HARRISON AVE	MADIGAN CREEK CULVERT SN 101-2053	CVP TUNNEL SN 101-1360	NOISEWALL SN 101-N7009	NOISEWALL SN 101-N7010	NOISEWALL SN 101-N7011	ROADWAY LIGHTING	TUNNEL LIGHTING	FIBER	TOLLWAY ELECTRICAL AND SIGNING	ROADWAY SIGNING
					ROADWAY	ROADWAY	BRIDGE SN 101-0208	BRIDGE SN 101-0209	BRIDGE SN 101-0210	BRIDGE SN 101-0211	BRIDGE SN 101-0213	BRIDGE SN 101-0214						I-39	CVP	I-39	I-39	I-39
					0003	0003	0010	0010	0010	0010	0010	0010	0003	0050	0020	0020	0020	0021	0021	0021	0021	0044
					87% FED 13% STATE	87% FED 13% STATE	87% FED 13% STATE	87% FED 13% STATE	87% FED 13% STATE	87% FED 13% STATE	87% FED 13% STATE	87% FED 13% STATE	87% FED 13% STATE	87% FED 13% STATE	87% FED 13% STATE	87% FED 13% STATE	87% FED 13% STATE	87% FED 13% STATE	100% VILLAGE	100% STATE	100% TOLLWAY	87% FED 13% STATE
*	81100300	CONDUIT ATTACHED TO STRUCTURE, 1" DIA., GALVANIZED STEEL	FOOT	1,195														1,195				
*	81100453	CONDUIT ATTACHED TO STRUCTURE, 3/4" DIA., STAINLESS STEEL	FOOT	440															440			
*	81101205	CONDUIT ATTACHED TO STRUCTURE, 6" DIA., PVC COATED GALVANIZED STEEL	FOOT	400																400		
*	81104580	CONDUIT ATTACHED TO STRUCTURE, 2" DIA., STAINLESS STEEL	FOOT	170														150	20			
*	81200230	CONDUIT EMBEDDED IN STRUCTURE, 2" DIA., PVC	FOOT	11,052														11,052				
*	81300220	JUNCTION BOX, STAINLESS STEEL, ATTACHED TO STRUCTURE, 6" X 6" X 4"	EACH	68														21	47			
*	81300530	JUNCTION BOX, STAINLESS STEEL, ATTACHED TO STRUCTURE, 12" X 10" X 6"	EACH	2														1	1			
*	81300610	JUNCTION BOX, STAINLESS STEEL, ATTACHED TO STRUCTURE, 14" X 12" X 6"	EACH	5														5				
*	81300948	JUNCTION BOX, STAINLESS STEEL, ATTACHED TO STRUCTURE, 24" X 24" X 10"	EACH	4																4		
*	81300986	JUNCTION BOX, STAINLESS STEEL, EMBEDDED IN STRUCTURE, 8" X 24" X 10"	EACH	2														2				
*	81400100	HANDHOLE	EACH	2																2		
*	81603096	UNIT DUCT, 600V, 4-1C NO.8, 1/C NO.8 GROUND, (XLP-TYPE USE), 1 1/4" DIA. POLYETHYLENE	FOOT	410														30	380			
*	81603100	UNIT DUCT, 600V, 4-1C NO.6, 1/C NO.6 GROUND, (XLP-TYPE USE), 1 1/4" DIA. POLYETHYLENE	FOOT	1,225														1,225				
*	81702110	ELECTRIC CABLE IN CONDUIT, 600V (XLP-TYPE USE) 1/C NO. 10	FOOT	6,493														4,333	2,160			

* SPECIALTY ITEM
\# NON-PARTICIPATING ITEM (100% STATE)
#FR NON-PARTICIPATING ITEM (100% FOUR RIVERS SANITARY)

MODEL: SOQ-21 [Sheet]
FILE NAME: c:\pwworld\benesch projects\projects\d0173723\D284C24-ML-sht-SOQ.dgn

benesch
Alfred Benesch & Company
35 W Wacker Drive, Suite 3300
Chicago, Illinois 60601
312-565-6450 Job No. 10800.00

USER NAME = agibson	DESIGNED - A.GIBSON	REVISED -	
	DRAWN - T.BLANK	REVISED -	
PLOT SCALE = 0.16666633 ' / in.	CHECKED - J.TARDY	REVISED -	
PLOT DATE = 2/6/2025	DATE - 02/27/24	REVISED -	

STATE OF ILLINOIS
DEPARTMENT OF TRANSPORTATION

SUMMARY OF QUANTITIES

SCALE: 1"=50' | SHEET 22 OF 32 SHEETS | STA. TO STA.

F.A.I RTE.	SECTION	COUNTY	TOTAL SHEETS	SHEET NO.
*	(201-3)R & (4-1.5)R	WINNEBAGO	1685	28
		CONTRACT NO. 64C24		
		ILLINOIS	FED. AID PROJECT	

* FAI ROUTE 39 (I-39) & FAP 301 (US 20)

	CODE NO.	ITEM DESCRIPTION	UNIT	TOTAL QUANTITY	I-39, RAMP B AND RAMP D	HARRISON AVE	I-39 NB OVER CNRR	I-39 SB OVER CNRR	I-39 NB OVER UPRR	I-39 SB OVER UPRR	I-39 NB OVER HARRISON AVE	I-39 SB OVER HARRISON AVE						ROADWAY LIGHTING	TUNNEL LIGHTING	FIBER	TOLLWAY ELECTRICAL AND SIGNING	ROADWAY SIGNING
					ROADWAY	ROADWAY	BRIDGE SN 101-0208	BRIDGE SN 101-0209	BRIDGE SN 101-0210	BRIDGE SN 101-0211	BRIDGE SN 101-0213	BRIDGE SN 101-0214	MADIGAN CREEK CULVERT SN 101-2053	CVP TUNNEL SN 101-1360	NOISEWALL SN 101-N7009	NOISEWALL SN 101-N7010	NOISEWALL SN 101-N7011	I-39	CVP	I-39	I-39	I-39
					0003	0003	0010	0010	0010	0010	0010	0010	0003	0050	0020	0020	0020	0021	0021	0021	0021	0044
					87% FED 13% STATE	87% FED 13% STATE	87% FED 13% STATE	87% FED 13% STATE	87% FED 13% STATE	87% FED 13% STATE	87% FED 13% STATE	87% FED 13% STATE	87% FED 13% STATE	87% FED 13% STATE	87% FED 13% STATE	87% FED 13% STATE	87% FED 13% STATE	87% FED 13% STATE	100% VILLAGE	100% STATE	100% TOLLWAY	87% FED 13% STATE
*	81702120	ELECTRIC CABLE IN CONDUIT, 600V (XLP-TYPE USE) 1/C NO. 8	FOOT	200														100	100			
*	81702130	ELECTRIC CABLE IN CONDUIT, 600V (XLP-TYPE USE) 1/C NO. 6	FOOT	52,868														51,398		1,470		
*	81702140	ELECTRIC CABLE IN CONDUIT, 600V (XLP-TYPE USE) 1/C NO. 4	FOOT	2,940																2,940		
*	81800230	AERIAL CABLE, 2-1/C NO. 6 WITH MESSENGER WIRE	FOOT	800														800				
*	82110008	LUMINAIRE, LED, ROADWAY, OUTPUT DESIGNATION H	EACH	108														108				
*	82110022	LUMINAIRE, LED, UNDERPASS, WALLMOUNT, OUTPUT DESIGNATION E	EACH	17														17				
*	82110027	LUMINAIRE, LED, UNDERPASS, SUSPENDED, OUTPUT DESIGNATION E	EACH	2														2				
*	82500350	LIGHTING CONTROLLER, BASE MOUNTED, 240VOLT, 100AMP	EACH	1															1			
*	83003550	LIGHT POLE, ALUMINUM, 45 FT. M.H., 12 FT. DAVIT ARM - TWIN	EACH	52														52				
*	83600300	LIGHT POLE FOUNDATION, 30" DIAMETER	FOOT	234														234				
*	89502300	REMOVE ELECTRIC CABLE FROM CONDUIT	FOOT	120																120		
*	89502380	REMOVE EXISTING HANDHOLE	EACH	1																1		
	Z0004552	APPROACH SLAB REMOVAL	SQ YD	1,211	1,211																	
#*	Z0010614	CLEANING EXISTING MANHOLE OR HANDHOLE	EACH	3																3		

* SPECIALTY ITEM
\# NON-PARTICIPATING ITEM (100% STATE)
#FR NON-PARTICIPATING ITEM (100% FOUR RIVERS SANITARY)

MODEL: SOQ-22 [Sheet]
FILE NAME: c:\pwworld\benesch projects\projects\d0173723\D284C24-ML-sht-SOQ.dgn

benesch
Alfred Benesch & Company
35 W Wacker Drive, Suite 3300
Chicago, Illinois 60601
312-565-0450 Job No. 10800.00

USER NAME = agibson	DESIGNED - A.GIBSON	REVISED -
	DRAWN - T.BLANK	REVISED -
PLOT SCALE = 0.16666633 ' / in.	CHECKED - J.TARDY	REVISED -
PLOT DATE = 2/6/2025	DATE - 02/27/24	REVISED -

STATE OF ILLINOIS
DEPARTMENT OF TRANSPORTATION

SUMMARY OF QUANTITIES

SCALE: 1"=50' | SHEET 23 OF 32 SHEETS | STA. TO STA.

F.A.I RTE.	SECTION	COUNTY	TOTAL SHEETS	SHEET NO.
*	(201-3)R & (4-1.5)R	WINNEBAGO	1685	29
		CONTRACT NO. 64C24		
		ILLINOIS	FED. AID PROJECT	

* FAI ROUTE 39 (I-39) & FAP 301 (US 20)

CODE NO.	ITEM DESCRIPTION	UNIT	TOTAL QUANTITY	I-39, RAMP B AND RAMP D	HARRISON AVE	I-39 NB OVER CNRR	I-39 SB OVER CNRR	I-39 NB OVER UPRR	I-39 SB OVER UPRR	I-39 NB OVER HARRISON AVE	I-39 SB OVER HARRISON AVE	MADIGAN CREEK CULVERT SN 101-2053	CVP TUNNEL SN 101-1360	NOISEWALL SN 101-N7009	NOISEWALL SN 101-N7010	NOISEWALL SN 101-N7011	ROADWAY LIGHTING	TUNNEL LIGHTING	FIBER	TOLLWAY ELECTRICAL AND SIGNING	ROADWAY SIGNING
				ROADWAY	ROADWAY	BRIDGE SN 101-0208	BRIDGE SN 101-0209	BRIDGE SN 101-0210	BRIDGE SN 101-0211	BRIDGE SN 101-0213	BRIDGE SN 101-0214						I-39	CVP	I-39	I-39	I-39
				0003	0003	0010	0010	0010	0010	0010	0010	0003	0050	0020	0020	0020	0021	0021	0021	0021	0044
				87% FED 13% STATE	87% FED 13% STATE	87% FED 13% STATE	87% FED 13% STATE	87% FED 13% STATE	87% FED 13% STATE	87% FED 13% STATE	87% FED 13% STATE	87% FED 13% STATE	87% FED 13% STATE	87% FED 13% STATE	87% FED 13% STATE	87% FED 13% STATE	87% FED 13% STATE	100% VILLAGE	100% STATE	100% TOLLWAY	87% FED 13% STATE
Z0013797	STABILIZED CONSTRUCTION ENTRANCE	SQ YD	7,548	7,548																	
Z0017700	DRAINAGE & UTILITY STRUCTURES TO BE RECONSTRUCTED	EACH	2	2																	
Z0018400	DRAINAGE STRUCTURES TO BE ADJUSTED	EACH	2	2																	
Z0018700	DRAINAGE STRUCTURE TO BE REMOVED	EACH	36	36																	
Z0023201	SEDIMENT CONTROL, SILT CURTAIN	EACH	9	9																	
Z0029090	DIAMOND GRINDING (BRIDGE SECTION)	SQ YD	16,351			1,924	1,924	4,299	4,327	1,692	2,185										
#* Z0033052	COMMUNICATIONS VAULT	EACH	14																14		
Z0034390	MODULAR EXPANSION JOINT 6"	FOOT	284					142	142												
Z0048665	RAILROAD PROTECTIVE LIABILITY INSURANCE	L SUM	1	1																	
* Z0054500	ROCK FILL	TON	1,339									1,339									
Z0062456	TEMPORARY PAVEMENT	SQ YD	10,939	10,848	91																
Z0062458	TEMPORARY PAVEMENT (VARIABLE DEPTH)	TON	669	669																	
Z0065740	SLOTTED DRAIN 12" WITH VARIABLE SLOT	FOOT	188	188																	
Z0065765	SLOTTED DRAIN 18" WITH VARIABLE SLOT	FOOT	647	647																	

* SPECIALTY ITEM
\# NON-PARTICIPATING ITEM (100% STATE)
#FR NON-PARTICIPATING ITEM (100% FOUR RIVERS SANITARY)

MODEL: SOQ-23 [Sheet]
FILE NAME: c:\pwworld\benesch projects\projects\d0173723\D284C24-ML-sht-SOQ.dgn

benesch
Alfred Benesch & Company
35 W Wacker Drive, Suite 3300
Chicago, Illinois 60601
312-565-0450 Job No. 10800.00

USER NAME = jMajcher	DESIGNED - A.GIBSON	REVISED -	
	DRAWN - T.BLANK	REVISED -	
PLOT SCALE = 0.16666633 ' / in.	CHECKED - J.TARDY	REVISED -	
PLOT DATE = 5/15/2025	DATE - 02/27/24	REVISED -	

STATE OF ILLINOIS
DEPARTMENT OF TRANSPORTATION

SUMMARY OF QUANTITIES

SCALE: 1"=50' | SHEET 24 OF 32 SHEETS | STA. TO STA.

F.A.I RTE.	SECTION	COUNTY	TOTAL SHEETS	SHEET NO.
*	(201-3)R & (4-1.5)R	WINNEBAGO	1685	30
		CONTRACT NO. 64C24		
	ILLINOIS	FED. AID PROJECT		

* FAI ROUTE 39 (I-39) & FAP 301 (US 20) •

REV. 5/30/25•

	CODE NO.	ITEM DESCRIPTION	UNIT	TOTAL QUANTITY	I-39, RAMP B AND RAMP D	HARRISON AVE	I-39 NB OVER CNRR	I-39 SB OVER CNRR	I-39 NB OVER UPRR	I-39 SB OVER UPRR	I-39 NB OVER HARRISON AVE	I-39 SB OVER HARRISON AVE						ROADWAY LIGHTING	TUNNEL LIGHTING	FIBER	TOLLWAY ELECTRICAL AND SIGNING	ROADWAY SIGNING
					ROADWAY	ROADWAY	BRIDGE SN 101-0208	BRIDGE SN 101-0209	BRIDGE SN 101-0210	BRIDGE SN 101-0211	BRIDGE SN 101-0213	BRIDGE SN 101-0214	MADIGAN CREEK CULVERT SN 101-2053	CVP TUNNEL SN 101-1360	NOISEWALL SN 101-N7009	NOISEWALL SN 101-N7010	NOISEWALL SN 101-N7011	I-39	CVP	I-39	I-39	I-39
					0003	0003	0010	0010	0010	0010	0010	0010	0003	0050	0020	0020	0020	0021	0021	0021	0021	0044
					87% FED 13% STATE	87% FED 13% STATE	87% FED 13% STATE	87% FED 13% STATE	87% FED 13% STATE	87% FED 13% STATE	87% FED 13% STATE	87% FED 13% STATE	87% FED 13% STATE	87% FED 13% STATE	87% FED 13% STATE	87% FED 13% STATE	87% FED 13% STATE	87% FED 13% STATE	100% VILLAGE	100% STATE	100% TOLLWAY	87% FED 13% STATE
	Z0073100	TEMPORARY SHORING	EACH	7					2	2		3										
	Z0073400	TEMPORARY SUPPORT SYSTEM	EACH	2									2									
	X0301423	NOISE ABATEMENT WALL, GROUND MOUNTED	SQ FT	174,500											37,435	66,128	70,937					
	X0320050	CONSTRUCTION LAYOUT (SPECIAL)	L SUM	1	1																	
*	X0323917	CABINET, MODEL 334	EACH	1																1		
	X0324013	NOISE ABATEMENT WALL, STRUCTURE MOUNTED	SQ FT	2,882													2,882					
	X0324587	NOISE ABATEMENT WALL ANCHOR ROD ASSEMBLY	EACH	40						40												
#*	X0325485	TRUSS MOUNTED LED DYNAMIC MESSAGE SIGN	EACH	1																1		
	X0326806	WASHOUT BASIN	L SUM	1	1																	
#*	X0327616	MAINTAINING ITS DURING CONSTRUCTION	CAL MO	36																36		
	X0327618	LANDSCAPING (SPECIAL)	L SUM	1	1																	
	X0328017	STREAM MITIGATION BANK CREDITS	EACH	963.42	963.42																	
	X0328022	WETLAND MITIGATION BANK CREDITS	EACH	3.50	3.50																	
#*	X1400282	POLYETHYLENE DUCT, 1 1/4" DIA	FOOT	53,808																53,808		

* SPECIALTY ITEM
\# NON-PARTICIPATING ITEM (100% STATE)
#FR NON-PARTICIPATING ITEM (100% FOUR RIVERS SANITARY)

MODEL: SOQ-24 [Sheet]
FILE NAME: c:\pwworld\benesch projects\projects\d0173723\D284C24-ML-sht-SOQ.dgn

benesch
Alfred Benesch & Company
35 W Wacker Drive, Suite 3300
Chicago, Illinois 60601
312-565-0450 Job No. 10800.00

USER NAME = agibson	DESIGNED - A. GIBSON	REVISED -	STATE OF ILLINOIS DEPARTMENT OF TRANSPORTATION	SUMMARY OF QUANTITIES	
	DRAWN - T. BLANK	REVISED -			
PLOT SCALE = 0.16666633 ' / in.	CHECKED - J.TARDY	REVISED -			
PLOT DATE = 2/6/2025	DATE - 02/27/24	REVISED -		SCALE: 1"=50' SHEET 25 OF 32 SHEETS STA. TO STA.	

F.A.I RTE.	SECTION	COUNTY	TOTAL SHEETS	SHEET NO.
*	(201-3)R & (4-1.5)R	WINNEBAGO	1685	31
		CONTRACT NO. 64C24		
		ILLINOIS	FED. AID PROJECT	

* FAI ROUTE 39 (I-39) & FAP 301 (US 20)

	CODE NO.	ITEM DESCRIPTION	UNIT	TOTAL QUANTITY	I-39, RAMP B AND RAMP D	HARRISON AVE	I-39 NB OVER CNRR	I-39 SB OVER CNRR	I-39 NB OVER UPRR	I-39 SB OVER UPRR	I-39 NB OVER HARRISON AVE	I-39 SB OVER HARRISON AVE						ROADWAY LIGHTING	TUNNEL LIGHTING	FIBER	TOLLWAY ELECTRICAL AND SIGNING	ROADWAY SIGNING
					ROADWAY	ROADWAY	BRIDGE SN 101-0208	BRIDGE SN 101-0209	BRIDGE SN 101-0210	BRIDGE SN 101-0211	BRIDGE SN 101-0213	BRIDGE SN 101-0214	MADIGAN CREEK CULVERT SN 101-2053	CVP TUNNEL SN 101-1360	NOISEWALL SN 101-N7009	NOISEWALL SN 101-N7010	NOISEWALL SN 101-N7011	I-39	CVP	I-39	I-39	I-39
					0003	0003	0010	0010	0010	0010	0010	0010	0003	0050	0020	0020	0020	0021	0021	0021	0021	0044
					87% FED 13% STATE	87% FED 13% STATE	87% FED 13% STATE	87% FED 13% STATE	87% FED 13% STATE	87% FED 13% STATE	87% FED 13% STATE	87% FED 13% STATE	87% FED 13% STATE	87% FED 13% STATE	87% FED 13% STATE	87% FED 13% STATE	87% FED 13% STATE	87% FED 13% STATE	100% VILLAGE	100% STATE	100% TOLLWAY	87% FED 13% STATE
*	X1400342	UNDERPASS LIGHTING REMOVAL	L SUM	1															1			
#*	X1400459	DYNAMIC MESSAGE SIGN REMOVAL - IDOT	EACH	1																1		
	X1700072	CONCRETE BARRIER, VERTICAL FACE (SPECIAL)	FOOT	20	20																	
	X2040805	FURNISHED EXCAVATION (SPECIAL)	CU YD	108,135	108,135																	
	X2100104	GEOTECHNICAL REINFORCEMENT	SQ YD	164,926	163,291	1,635																
#	X2503000	MAINTENANCE MOWING	ACRE	372.75	372.75																	
	X4062952	HOT-MIX ASPHALT STABILIZATION 6" AT STEEL PLATE BEAM GUARD RAIL	SQ YD	2,920	2,920																	
	X4400110	TEMPORARY PAVEMENT REMOVAL	SQ YD	10,939	10,848	91																
	X4810110	TEMPORARY AGGREGATE WEDGE	TON	6,804	6,804																	
	X5012506	CONCRETE WALL REMOVAL	FOOT	145	145																	
	X5030250	BRIDGE DECK GROOVING (LONGITUDINAL)	SQ YD	8,981			1,282	1,282	2,219	2,219	791	1,188										
	X5080530	BAR TERMINATORS	EACH	4,756			1,350	1,354	76	76	844	1,056										
	X5090810	PEDESTRIAN RAIL (SPECIAL)	FOOT	179							97	02										
	X5420484	PIPE CULVERTS, SPECIAL, 84 CURVED	FOOT	66	66																	

* SPECIALTY ITEM
\# NON-PARTICIPATING ITEM (100% STATE)
#FR NON-PARTICIPATING ITEM (100% FOUR RIVERS SANITARY)

MODEL: SOQ-25 [Sheet]
FILE NAME: c:\pwworld\benesch projects\projects\d0173723\D284C24-ML-sht-SOQ.dgn

benesch
Alfred Benesch & Company
35 W Wacker Drive, Suite 3300
Chicago, Illinois 60601
312-565-0450 Job No. 10800.00

USER NAME = jMajcher	DESIGNED - A. GIBSON	REVISED -	
	DRAWN - T. BLANK	REVISED -	
PLOT SCALE = 0.16666633 ' / in.	CHECKED - J.TARDY	REVISED -	
PLOT DATE = 5/15/2025	DATE - 02/27/24	REVISED -	

STATE OF ILLINOIS
DEPARTMENT OF TRANSPORTATION

SUMMARY OF QUANTITIES

SCALE: 1"=50' | SHEET 26 OF 32 SHEETS | STA. TO STA.

F.A.I RTE.	SECTION	COUNTY	TOTAL SHEETS	SHEET NO.
*	(201-3)R & (4-1.5)R	WINNEBAGO	1685	32
		CONTRACT NO. 64C24		
		ILLINOIS	FED. AID PROJECT	

* FAI ROUTE 39 (I-39) & FAP 301 (US 20)

CODE NO.	ITEM DESCRIPTION	UNIT	TOTAL QUANTITY	I-39, RAMP B AND RAMP D	HARRISON AVE	I-39 NB OVER CNRR	I-39 SB OVER CNRR	I-39 NB OVER UPRR	I-39 SB OVER UPRR	I-39 NB OVER HARRISON AVE	I-39 SB OVER HARRISON AVE	MADIGAN CREEK CULVERT SN 101-2053	CVP TUNNEL SN 101-1360	NOISEWALL SN 101-N7009	NOISEWALL SN 101-N7010	NOISEWALL SN 101-N7011	ROADWAY LIGHTING	TUNNEL LIGHTING	FIBER	TOLLWAY ELECTRICAL AND SIGNING	ROADWAY SIGNING
				ROADWAY	ROADWAY	BRIDGE SN 101-0208	BRIDGE SN 101-0209	BRIDGE SN 101-0210	BRIDGE SN 101-0211	BRIDGE SN 101-0213	BRIDGE SN 101-0214						I-39	CVP	I-39	I-39	I-39
				0003	0003	0010	0010	0010	0010	0010	0010	0003	0050	0020	0020	0020	0021	0021	0021	0021	0044
				87% FED 13% STATE	87% FED 13% STATE	87% FED 13% STATE	87% FED 13% STATE	87% FED 13% STATE	87% FED 13% STATE	87% FED 13% STATE	87% FED 13% STATE	87% FED 13% STATE	87% FED 13% STATE	87% FED 13% STATE	87% FED 13% STATE	87% FED 13% STATE	87% FED 13% STATE	100% VILLAGE	100% STATE	100% TOLLWAY	87% FED 13% STATE
X5509900	ABANDON AND FILL EXISTING STORM SEWER	FOOT	348	348																	
X5509912	ABANDON EXISTING CULVERT	EACH	1	1																	
X5810103	MEMBRANE WATERPROOFING SYSTEM FOR BURIED STRUCTURES	SQ YD	349										349								
X6020001	CONTROL STRUCTURES NO. 1 (SPECIAL)	EACH	1	1																	
X6020002	CONTROL STRUCTURES NO. 2 (SPECIAL)	EACH	1	1																	
X6020003	CONTROL STRUCTURES NO. 3 (SPECIAL)	EACH	2	2																	
X6020004	CONTROL STRUCTURES NO. 4 (SPECIAL)	EACH	1	1																	
X6020005	CONTROL STRUCTURES NO. 5 (SPECIAL)	EACH	1	1																	
X6020006	CONTROL STRUCTURES NO. 6 (SPECIAL)	EACH	1	1																	
X6020007	CONTROL STRUCTURES NO. 7 (SPECIAL)	EACH	2	2																	
X6020008	CONTROL STRUCTURES NO. 8 (SPECIAL)	EACH	2	2																	
X6020009	CONTROL STRUCTURES NO. 9 (SPECIAL)	EACH	1	1																	
X6020010	CONTROL STRUCTURES NO. 10 (SPECIAL)	EACH	3	3																	
X6020184	TEMPORARY DRAINAGE CONNECTION	EACH	66	66																	

* SPECIALTY ITEM
\# NON-PARTICIPATING ITEM (100% STATE)
#FR NON-PARTICIPATING ITEM (100% FOUR RIVERS SANITARY)

MODEL: SOQ-26 [Sheet]
FILE NAME: c:\pwworld\benesch projects\projects\d0173723\D284C24-ML-sht-SOQ.dgn

benesch
Alfred Benesch & Company
35 W Wacker Drive, Suite 3300
Chicago, Illinois 60601
312-565-0450 Job No. 10800.00

USER NAME = agibson	DESIGNED - A. GIBSON	REVISED -	
	DRAWN - T. BLANK	REVISED -	
PLOT SCALE = 0.16666633 ' / in.	CHECKED - J.TARDY	REVISED -	
PLOT DATE = 2/6/2025	DATE - 02/27/24	REVISED -	

STATE OF ILLINOIS
DEPARTMENT OF TRANSPORTATION

SUMMARY OF QUANTITIES

SCALE: 1"=50' | SHEET 27 OF 32 SHEETS | STA. TO STA.

F.A.I RTE.	SECTION	COUNTY	TOTAL SHEETS	SHEET NO.
*	(201-3)R & (4-1.5)R	WINNEBAGO	1685	33
		CONTRACT NO. 64C24		
		ILLINOIS	FED. AID PROJECT	

* FAI ROUTE 39 (I-39) & FAP 301 (US 20)

	CODE NO.	ITEM DESCRIPTION	UNIT	TOTAL QUANTITY	I-39, RAMP B AND RAMP D	HARRISON AVE	I-39 NB OVER CNRR	I-39 SB OVER CNRR	I-39 NB OVER UPRR	I-39 SB OVER UPRR	I-39 NB OVER HARRISON AVE	I-39 SB OVER HARRISON AVE						ROADWAY LIGHTING	TUNNEL LIGHTING	FIBER	TOLLWAY ELECTRICAL AND SIGNING	ROADWAY SIGNING
					ROADWAY	ROADWAY	BRIDGE SN 101-0208	BRIDGE SN 101-0209	BRIDGE SN 101-0210	BRIDGE SN 101-0211	BRIDGE SN 101-0213	BRIDGE SN 101-0214	MADIGAN CREEK CULVERT SN 101-2053	CVP TUNNEL SN 101-1360	NOISEWALL SN 101-N7009	NOISEWALL SN 101-N7010	NOISEWALL SN 101-N7011	I-39	CVP	I-39	I-39	I-39
					0003	0003	0010	0010	0010	0010	0010	0010	0003	0050	0020	0020	0020	0021	0021	0021	0021	0044
					87% FED 13% STATE	87% FED 13% STATE	87% FED 13% STATE	87% FED 13% STATE	87% FED 13% STATE	87% FED 13% STATE	87% FED 13% STATE	87% FED 13% STATE	87% FED 13% STATE	87% FED 13% STATE	87% FED 13% STATE	87% FED 13% STATE	87% FED 13% STATE	87% FED 13% STATE	100% VILLAGE	100% STATE	100% TOLLWAY	87% FED 13% STATE
	X6020243	CATCH BASIN, TYPE A, 5'-DIAMETER, WITH GRATE NO. 1 (SPECIAL)	EACH	1	1																	
	X6020296	MANHOLES, TYPE A, 8'-DIAMETER, WITH SPECIAL FRAME AND GRATE	EACH	3	3																	
	X6022109	MANHOLES, TYPE A, 10'-DIAMETER (SPECIAL)	EACH	4	4																	
	X6022930	MANHOLES, TYPE A, 5'-DIAMETER, WITH SPECIAL FRAME AND GRATE	EACH	7	7																	
	X6024090	MANHOLES, TYPE A, 6'-DIAMETER, WITH SPECIAL FRAME AND GRATE	EACH	4	4																	
#FR	X6026056	SANITARY MANHOLES TO BE ADJUSTED WITH NEW TYPE 1 FRAME, CLOSED LID	EACH	5	5																	
#FR	X6026057	SANITARY MANHOLES TO BE RECONSTRUCTED WITH NEW TYPE 1 FRAME, CLOSED LID	EACH	2	2																	
#*	X6026627	VAULTS TO BE REMOVED	EACH	6																6		
	X6350206	LINEAR DELINEATOR PANELS, 6 INCH	EACH	22	22																	
	X6370048	CONCRETE BARRIER BASE (SPECIAL)	FOOT	9,995	9,995																	
	X6420100	SHOULDER RUMBLE STRIP REMOVAL	SQ YD	10,052	10,052																	
	X6430120	REMOVE IMPACT ATTENUATORS, NO SALVAGE	EACH	9	9																	
	X6431110	REMOVE ATTENUATOR BASE	EACH	9	9																	
	X6640104	FENCE REMOVAL	FOOT	4,851	4,851																	

* SPECIALTY ITEM
\# NON-PARTICIPATING ITEM (100% STATE)
#FR NON-PARTICIPATING ITEM (100% FOUR RIVERS SANITARY)

MODEL: SOQ-27 [Sheet]
FILE NAME: c:\pwworld\benesch projects\projects\d0173723\D284C24-MI-sht-SOQ.dgn

benesch
Alfred Benesch & Company
35 W Wacker Drive, Suite 3300
Chicago, Illinois 60601
312-565-0450 Job No. 10800.00

USER NAME = agibson	DESIGNED - A. GIBSON	REVISED -
	DRAWN - T. BLANK	REVISED -
PLOT SCALE = 0.16666633 ' / in.	CHECKED - J. TARDY	REVISED -
PLOT DATE = 2/14/2025	DATE -	REVISED -

STATE OF ILLINOIS
DEPARTMENT OF TRANSPORTATION

SUMMARY OF QUANTITIES

SCALE: 1"=50' | SHEET 28 OF 32 SHEETS | STA. TO STA.

F.A.I RTE.	SECTION	COUNTY	TOTAL SHEETS	SHEET NO.
*	(201-3)R & (4-1.5)R	WINNEBAGO	1685	34
		CONTRACT NO. 64C24		
	ILLINOIS	FED. AID PROJECT		

* FAI ROUTE 39 (I-39) & FAP 301 (US 20) •

REV. 5/30/25•

	CODE NO.	ITEM DESCRIPTION	UNIT	TOTAL QUANTITY	I-39, RAMP B AND RAMP D	HARRISON AVE	I-39 NB OVER CNRR	I-39 SB OVER CNRR	I-39 NB OVER UPRR	I-39 SB OVER UPRR	I-39 NB OVER HARRISON AVE	I-39 SB OVER HARRISON AVE						ROADWAY LIGHTING	TUNNEL LIGHTING	FIBER	TOLLWAY ELECTRICAL AND SIGNING	ROADWAY SIGNING
					ROADWAY	ROADWAY	BRIDGE SN 101-0208	BRIDGE SN 101-0209	BRIDGE SN 101-0210	BRIDGE SN 101-0211	BRIDGE SN 101-0213	BRIDGE SN 101-0214	MADIGAN CREEK CULVERT SN 101-2053	CVP TUNNEL SN 101-1360	NOISEWALL SN 101-N7009	NOISEWALL SN 101-N7010	NOISEWALL SN 101-N7011	I-39	CVP	I-39	I-39	I-39
					0003	0003	0010	0010	0010	0010	0010	0010	0003	0050	0020	0020	0020	0021	0021	0021	0021	0044
					87% FED 13% STATE	87% FED 13% STATE	87% FED 13% STATE	87% FED 13% STATE	87% FED 13% STATE	87% FED 13% STATE	87% FED 13% STATE	87% FED 13% STATE	87% FED 13% STATE	87% FED 13% STATE	87% FED 13% STATE	87% FED 13% STATE	87% FED 13% STATE	87% FED 13% STATE	100% VILLAGE	100% STATE	100% TOLLWAY	87% FED 13% STATE
	X6670202	INLET MARKER	EACH	57	57																	
	X6700410	ENGINEER'S FIELD OFFICE, TYPE A (SPECIAL)	CAL MO	40	40																	
	X7010216	TRAFFIC CONTROL AND PROTECTION, (SPECIAL)	L SUM	1	1																	
	X7010600	TRAFFIC CONTROL AND PROTECTION, STANDARD 701406 (SPECIAL)	L SUM	1	1																	
	X7010805	TRAFFIC CONTROL AND PROTECTION, STANDARD 701401 (SPECIAL)	L SUM	1	1																	
	X7040652	REMOVE TEMPORARY CONCRETE BARRIER, STATE OWNED	FOOT	413	413																	
	X7060100	REMOVE TEMPORARY IMPACT ATTENUATORS, STATE OWNED	EACH	4	2	2																
*	X7200075	REMOVE AND REINSTALL SIGN PANEL	SQ FT	448																		448
	X7200203	DETOUR SIGNING	L SUM	1	1																	
*	X7820007	GUARDRAIL REFLECTORS, TYPE C (SPECIAL)	EACH	207	204	3																
*	X8000003	MAINTENANCE OF LIGHTING SYSTEM	CAL MO	36														36				
*	X8211000	UNDERPASS LUMINAIRE (SPECIAL)	EACH	46															46			
#*	X8301804	REMOVAL OF TEMPORARY WOOD POLES AND FIBER OPTIC CABLE	L SUM	1																1		
*	X8302151	TEMPORARY WOOD POLE, 50 FT., CLASS 4	EACH	4														4				

* SPECIALTY ITEM
\# NON-PARTICIPATING ITEM (100% STATE)
#FR NON-PARTICIPATING ITEM (100% FOUR RIVERS SANITARY)

MODEL: SOQ-28 [Sheet]
FILE NAME: c:\pwworld\benesch projects\projects\d0173723\D284C24-ML-sht-SOQ.dgn

benesch
Alfred Benesch & Company
35 W Wacker Drive, Suite 3300
Chicago, Illinois 60601
312-565-0450 Job No. 10600.00

USER NAME = agibson	DESIGNED - A. GIBSON	REVISED -
	DRAWN - T. BLANK	REVISED -
PLOT SCALE = 0.16666633 ' / in.	CHECKED - J. TARDY	REVISED -
PLOT DATE = 2/14/2025	DATE -	REVISED -

STATE OF ILLINOIS
DEPARTMENT OF TRANSPORTATION

SUMMARY OF QUANTITIES

SCALE: 1"=50' | SHEET 29 OF 32 SHEETS | STA. TO STA.

F.A.I RTE.	SECTION	COUNTY	TOTAL SHEETS	SHEET NO.
*	(201-3)R & (4-1.5)R	WINNEBAGO	1685	35
		CONTRACT NO. 64C24		
		ILLINOIS	FED. AID PROJECT	

* FAI ROUTE 39 (I-39) & FAP 301 (US 20)

	CODE NO.	ITEM DESCRIPTION	UNIT	TOTAL QUANTITY	I-39, RAMP B AND RAMP D	HARRISON AVE	I-39 NB OVER CNRR	I-39 SB OVER CNRR	I-39 NB OVER UPRR	I-39 SB OVER UPRR	I-39 NB OVER HARRISON AVE	I-39 SB OVER HARRISON AVE	MADIGAN CREEK CULVERT SN 101-2053	CVP TUNNEL SN 101-1360	NOISEWALL SN 101-N7009	NOISEWALL SN 101-N7010	NOISEWALL SN 101-N7011	ROADWAY LIGHTING	TUNNEL LIGHTING	FIBER	TOLLWAY ELECTRICAL AND SIGNING	ROADWAY SIGNING
					ROADWAY	ROADWAY	BRIDGE SN 101-0208	BRIDGE SN 101-0209	BRIDGE SN 101-0210	BRIDGE SN 101-0211	BRIDGE SN 101-0213	BRIDGE SN 101-0214						I-39	CVP	I-39	I-39	I-39
					0003	0003	0010	0010	0010	0010	0010	0010	0003	0050	0020	0020	0020	0021	0021	0021	0021	0044
					87% FED 13% STATE	87% FED 13% STATE	87% FED 13% STATE	87% FED 13% STATE	87% FED 13% STATE	87% FED 13% STATE	87% FED 13% STATE	87% FED 13% STATE	87% FED 13% STATE	87% FED 13% STATE	87% FED 13% STATE	87% FED 13% STATE	87% FED 13% STATE	87% FED 13% STATE	100% VILLAGE	100% STATE	100% TOLLWAY	87% FED 13% STATE
#*	X8500102	MAINTENANCE OF EXISTING FIBER OPTIC CABLE (FOC) NETWORK	MONTH	32																32		
#*	X8710013	FIBER OPTIC CABLE IN CONDUIT, 12 FIBERS, SINGLE MODE	FOOT	170																170		
#*	X8710023	FIBER OPTIC CABLE IN CONDUIT, 96 FIBERS, SINGLE MODE	FOOT	45,195																45,195		
#*	X8710304	FIBER OPTIC CABLE SPLICE - LATERAL	EACH	2																2		
#*	X8710306	FIBER OPTIC CABLE SPLICE - MAINLINE	EACH	9																9		
#*	X8710318	FIBER OPTIC UTILITY MARKER	EACH	14																14		
#*	X8950510	REMOVE FIBER OPTIC CABLE FROM CONDUIT	FOOT	7,310																7,310		
*	JS733220	SIGN STRUCTURE WALKWAY	FOOT	13																	13	
*	JS733850	OVERHEAD SIGN STRUCTURE, SPAN TYPE (STEEL) (120 FT)	FOOT	120																	120	
*	JS734A10	FOUNDATION FOR OVERHEAD SIGN STRUCTURE, SPAN TYPE	CU YD	100.9																	100.9	
*	JS810826	UNDERGROUND CONDUIT, GALVANIZED STEEL, 6" DIA.	FOOT	180																	180	
*	JS817213	ELECTRIC CABLE IN CONDUIT, 600V (XLP-TYPE USE) 1/C NO. 6	FOOT	839																	839	
*	JS817214	ELECTRIC CABLE IN CONDUIT, 600V (XLP-TYPE USE) 1/C NO. 4	FOOT	1,678																	1,678	
*	JT132040	DYNAMIC MESSAGE SIGN - TYPE 1	EACH	1																	1	

* SPECIALTY ITEM
\# NON-PARTICIPATING ITEM (100% STATE)
#FR NON-PARTICIPATING ITEM (100% FOUR RIVERS SANITARY)

MODEL: SOQ-29 [Sheet]
FILE NAME: c:\pwworld\benesch projects\projects\d0173723\D284C24-MI-sht-SOQ.dgn

benesch
Alfred Benesch & Company
35 W Wacker Drive, Suite 3300
Chicago, Illinois 60601
312-565-0450 Job No. 10800.00

USER NAME = agibson	DESIGNED - A. GIBSON	REVISED -
	DRAWN - T. BLANK	REVISED -
PLOT SCALE = 0.16666633 ' / in.	CHECKED - J. TARDY	REVISED -
PLOT DATE = 2/6/2025	DATE -	REVISED -

STATE OF ILLINOIS
DEPARTMENT OF TRANSPORTATION

SUMMARY OF QUANTITIES

SCALE: 1"=50' | SHEET 30 OF 32 SHEETS | STA. TO STA.

F.A.I RTE.	SECTION	COUNTY	TOTAL SHEETS	SHEET NO.
*	(201-3)R & (4-1.5)R	WINNEBAGO	1685	36
		CONTRACT NO. 64C24		
		ILLINOIS	FED. AID PROJECT	

* FAI ROUTE 39 (I-39) & FAP 301 (US 20)

	CODE NO.	ITEM DESCRIPTION	UNIT	TOTAL QUANTITY	I-39, RAMP B AND RAMP D	HARRISON AVE	I-39 NB OVER CNRR	I-39 SB OVER CNRR	I-39 NB OVER UPRR	I-39 SB OVER UPRR	I-39 NB OVER HARRISON AVE	I-39 SB OVER HARRISON AVE	MADIGAN CREEK CULVERT SN 101-2053	CVP TUNNEL SN 101-1360	NOISEWALL SN 101-N7009	NOISEWALL SN 101-N7010	NOISEWALL SN 101-N7011	ROADWAY LIGHTING	TUNNEL LIGHTING	FIBER	TOLLWAY ELECTRICAL AND SIGNING	ROADWAY SIGNING
					ROADWAY	ROADWAY	BRIDGE SN 101-0208	BRIDGE SN 101-0209	BRIDGE SN 101-0210	BRIDGE SN 101-0211	BRIDGE SN 101-0213	BRIDGE SN 101-0214	CULVERT SN 101-2053	TUNNEL SN 101-1360	SN 101-N7009	SN 101-N7010	SN 101-N7011	I-39	CVP	I-39	I-39	I-39
					0003	0003	0010	0010	0010	0010	0010	0010	0003	0050	0020	0020	0020	0021	0021	0021	0021	0044
					87% FED 13% STATE	87% FED 13% STATE	87% FED 13% STATE	87% FED 13% STATE	87% FED 13% STATE	87% FED 13% STATE	87% FED 13% STATE	87% FED 13% STATE	87% FED 13% STATE	87% FED 13% STATE	87% FED 13% STATE	87% FED 13% STATE	87% FED 13% STATE	87% FED 13% STATE	100% VILLAGE	100% STATE	100% TOLLWAY	87% FED 13% STATE
*	JT132050	DYNAMIC MESSAGE SIGN -TYPE 1 (TRAINING)	L SUM	1																	1	
*	JT132060	DYNAMIC MESSAGE SIGN - TYPE 1 (SPARE PARTS)	EACH	1																	1	
*	JT132112	REMOVE DYNAMIC MESSAGE SIGN CONTROLLER FOUNDATION	EACH	1																	1	
*	JT132114	REMOVE DYNAMIC MESSAGE SIGN - TYPE 1	EACH	1																	1	
*	JT132621	DMS ELECTRICAL WORK - TYPE 1	EACH	1																	1	
*	JT132800	REMOVE ITS POLE MOUNTED ENCLOSURE	EACH	1																	1	
*	JT132810	ITS POLE MOUNTED ENCLOSURE (CCTV OR MVDS)	EACH	1																	1	
*	JT132814	ITS DISCONNECT SWITCH ASSEMBLY	EACH	2																	2	
*	JT132820	CCTV CAMERA, ITS ASSEMBLY	EACH	1																	1	
*	JT132830	FIBER OPTIC COMMUNICATIONS, ITS ASSEMBLY	EACH	2																	2	
*	JT134002	MAINTAIN INTELLIGENT TRANSPORTATION SYSTEMS	CAL MO	36																	36	
*	JT134037	ITS ELEMENT SITE GROUNDING - POLE MOUNTED ASSEMBLY	EACH	1																	1	
*	JT135097	REMOVE CCTV CAMERA, POLE MOUNTED	EACH	1																	1	
*	JT160099	HANDHOLE FOR SINGLE MODE FIBER OPTIC CABLE, TORSION ASSIST, 48"X72"X36"	EACH	1																	1	

* SPECIALTY ITEM
\# NON-PARTICIPATING ITEM (100% STATE)
#FR NON-PARTICIPATING ITEM (100% FOUR RIVERS SANITARY)

MODEL: SOQ-30 [Sheet]
FILE NAME: c:\pwworld\benesch projects\projects\d0173723\D284C24-ML-sht-SOQ.dgn

benesch
Alfred Benesch & Company
35 W Wacker Drive, Suite 3300
Chicago, Illinois 60601
312-565-0450 Job No. 10800.00

USER NAME = agibson	DESIGNED - A.GIBSON	REVISED -	
	DRAWN - T.BLANK	REVISED -	
PLOT SCALE = 0.16666633 ' / in.	CHECKED - J.TARDY	REVISED -	
PLOT DATE = 2/13/2025	DATE -	REVISED -	

STATE OF ILLINOIS
DEPARTMENT OF TRANSPORTATION

SUMMARY OF QUANTITIES

SCALE: SHEET 31 OF 32 SHEETS STA. TO STA.

F.A.I RTE.	SECTION	COUNTY	TOTAL SHEETS	SHEET NO.
*	(201-3)R & (4-1.5)R	WINNEBAGO	1685	37
		CONTRACT NO. 64C24		
	ILLINOIS	FED. AID PROJECT		

* FAI ROUTE 39 (I-39) & FAP 301 (US 20)

	CODE NO.	ITEM DESCRIPTION	UNIT	TOTAL QUANTITY	I-39, RAMP D AND RAMP D	HARRISON AVE	I-39 NB OVER CNRR	I-39 SB OVER CNRR	I-39 NB OVER UPRR	I-39 SB OVER UPRR	I-39 NB OVER HARRISON AVE	I-39 SB OVER HARRISON AVE	MADIGAN CREEK CULVERT SN 101-2053	CVP TUNNEL SN 101-1360	NOISEWALL SN 101-N7009	NOISEWALL SN 101-N7010	NOISEWALL SN 101-N7011	ROADWAY LIGHTING	TUNNEL LIGHTING	FIBER	TOLLWAY ELECTRICAL AND SIGNING	ROADWAY SIGNING
					ROADWAY	ROADWAY	BRIDGE SN 101-0208	BRIDGE SN 101-0209	BRIDGE SN 101-0210	BRIDGE SN 101-0211	BRIDGE SN 101-0213	BRIDGE SN 101-0214						I-39	CVP	I-39	I-39	I-39
					0003	0003	0010	0010	0010	0010	0010	0010	0003	0050	0020	0020	0020	0021	0021	0021	0021	0044
					87% FED 13% STATE	87% FED 13% STATE	87% FED 13% STATE	87% FED 13% STATE	87% FED 13% STATE	87% FED 13% STATE	87% FED 13% STATE	87% FED 13% STATE	87% FED 13% STATE	87% FED 13% STATE	87% FED 13% STATE	87% FED 13% STATE	87% FED 13% STATE	87% FED 13% STATE	100% VILLAGE	100% STATE	100% TOLLWAY	87% FED 13% STATE
*	JT160217	LOCATE POST FOR FIBER OPTIC CABLE	EACH	2																	2	
*	JT160226	SINGLE MODE FIBER OPTIC CABLE REMOVAL, NO SALVAGE	FOOT	267																	267	
*	JT810873	UNDERGROUND CONDUIT, COILABLE NONMETALLIC CONDUIT, SDR 11, 1 1/4" DIA.	FOOT	515																	515	
*	JT810876	UNDERGROUND CONDUIT, COILABLE NONMETALLIC CONDUIT, SDR 11, 2" DIA.	FOOT	839																	839	
*	JT830051	GROUND MOUNTED LIGHT POLE, GALVANIZED STEEL, 50 FT., WITHOUT MAST ARM	EACH	1																	1	
*	JT836018	ITS ELEMENT POLE FOUNDATION STEEL HELIX (10 FT)	EACH	1																	1	
*	JT836028	ITS CONCRETE SERVICE PAD, TYPE B	EACH	1																	1	
*	JT901056	LOCATE TRACER WIRE	FOOT	329																	329	
	X5213422	ERECTING HIGH LOAD MULTI-ROTATIONAL BEARINGS, DISC, FIXED-600K	EACH	20					10	10												
	X5213622	ERECTING HIGH LOAD MULTI-ROTATIONAL BEARINGS, DISC, GUIDED EXPANSION-600K	EACH	20					10	10												
Ø	Z0076600	TRAINEES	HOUR	5,000	5,000																	
Ø	Z0076604	TRAINEES - TRAINING PROGRAM GRADUATE	HOUR	5,000	5,000																	

Ø 0042

* SPECIALTY ITEM

\# NON-PARTICIPATING ITEM (100% STATE)

#FR NON-PARTICIPATING ITEM (100% FOUR RIVERS SANITARY)

MODEL: SOQ-31 [Sheet]
FILE NAME: c:\pwworkdir\benesch projects\projects\d0173723\D284C24-ML-sht-SOQ.dgn

benesch
Alfred Benesch & Company
35 W Wacker Drive, Suite 3200
Chicago, Illinois 60601
312-654-0450 Job No. 10800.00

USER NAME = tkluegel	DESIGNED - A.GIBSON	REVISED -	
	DRAWN - T.BLANK	REVISED -	
PLOT SCALE = 0.16666633 ' / in.	CHECKED - J.TARDY	REVISED -	
PLOT DATE = 4/28/2025	DATE -	REVISED -	

STATE OF ILLINOIS
DEPARTMENT OF TRANSPORTATION

SUMMARY OF QUANTITIES

SCALE: SHEET 32 OF 32 SHEETS STA. TO STA.

F.A.I RTE.	SECTION	COUNTY	TOTAL SHEETS	SHEET NO.
*	(201-3)R & (4-1.5)R	WINNEBAGO	1685	38
		CONTRACT NO. 64C24		
		ILLINOIS	FED. AID PROJECT	

* FAI ROUTE 39 (I-39) & FAP 301 (US 20) •

REV. 6/5/25 REV. 5/30/25 •

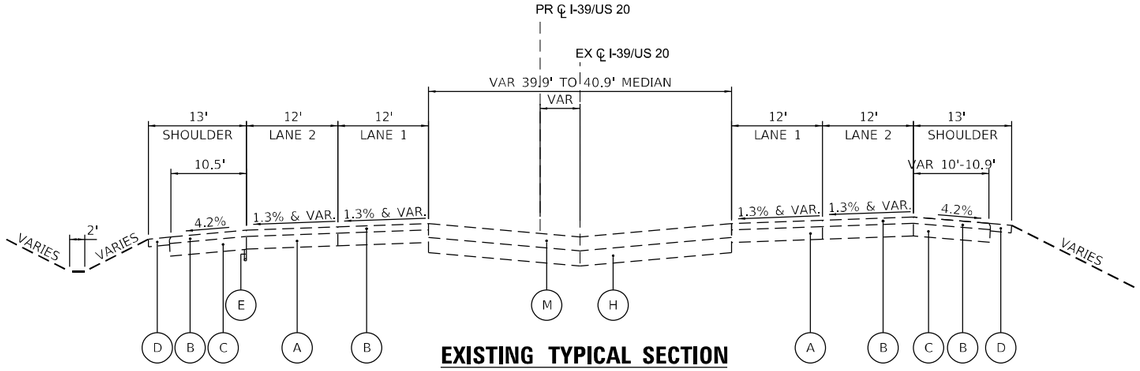

EXISTING TYPICAL SECTION

I–39 /US 20

STA 2620+83 TO STA 2628+56

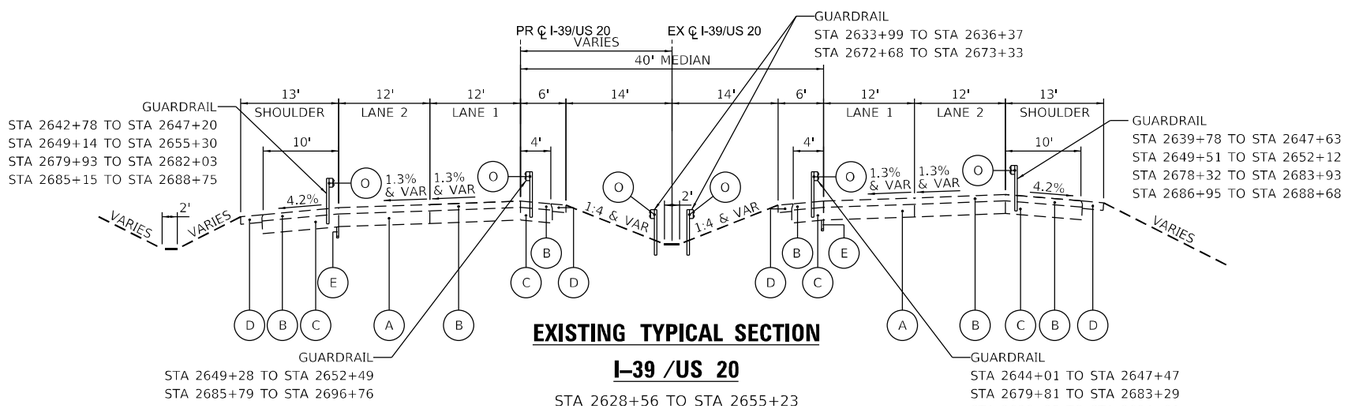

EXISTING TYPICAL SECTION

I–39 /US 20

STA 2628+56 TO STA 2655+23
BRIDGE GAP STA 2647+21 TO STA 2649+51
(SN 101-0067 AND SN 101-0068)
STA 2676+97 TO STA 2698+24
STA 2700+58 TO STA 2701+00
BRIDGE GAP STA 2682+16 TO STA 2686+92
(SN 101-0069 AND SN 101-0070)

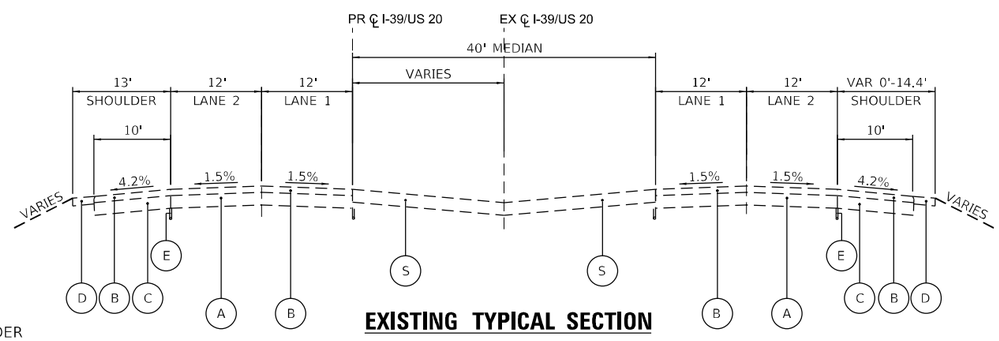

EXISTING TYPICAL SECTION

I–39 /US 20

STA 2698+24 TO STA 2700+58

NOTE:
EXISTING PAVEMENT AND SHOULDER THICKNESSES ARE BASED ON RECORD PLANS. ACTUAL THICKNESSES SHOULD BE FIELD VERIFIED.

LEGEND

- (A) EXISTING 10" CONTINUOUSLY REINFORCED CONCRETE PAVEMENT
- (B) EXISTING 5" HMA OVERLAY
- (C) EXISTING 10" HMA SHOULDER
- (D) EXISTING AGGREGATE SHOULDER
- (E) EXISTING PIPE UNDERDRAINS
- (F) EXISTING PORTLAND CEMENT CONCRETE PAVEMENT 10 1/4" (JOINTED)
- (G) EXISTING STABILIZED SUBBASE - HMA, 4"
- (H) EXISTING AGGREGATE SUBGRADE, 12"
- (I) EXISTING COMBINATION CONCRETE CURB & GUTTER, TYPE B-6.24
- (J) EXISTING PAVEMENT (9" HMA OR 8.75" JOINTED PCC OVER 4" HMA STABILIZED SUBBASE) (SEE NOTE 1)
- (K) EXISTING TEMPORARY CONCRETE BARRIER
- (L) EXISTING 12" HMA SHOULDER
- (M) EXISTING PAVEMENT (11" HMA OR 10" JOINTED PCC OVER 4" HMA STABILIZED SUBBASE) (SEE NOTE 1)
- (N) EXISTING PAVEMENT (13.5" HMA OR 11" JOINTED PCC OVER 4" HMA STABILIZED SUBBASE) (SEE NOTE 1)
- (O) EXISTING GUARDRAIL
- (P) EXISTING HMA PATH
- (Q) EXISTING AGGREGATE
- (R) EXISTING 6" HMA SHOULDER
- (S) EXISTING PCC CROSSOVER PAVEMENT
- (T) EXISTING CLASS B PATCHES, 12 INCH
- (U) EXISTING AGGREGATE SUBGRADE, 24"

NOTES:
1. ASSUME JOINTED PCC OVER HMA FOR BIDDING PURPOSES

MODEL: Ex Typ [Sheet]
FILE NAME: c:\pwworkdir\benesch projects\projects\d0172845\D264C24-ML-sht-ExTypSect.dgn

USER NAME = agibson	DESIGNED - J.MAJCHER	REVISED -	STATE OF ILLINOIS DEPARTMENT OF TRANSPORTATION
	DRAWN - J.MAJCHER	REVISED -	
PLOT SCALE = 0.16666633 ' / in.	CHECKED - A. GIBSON	REVISED -	
PLOT DATE = 2/6/2025	DATE - 02/27/24	REVISED -	

EXISTING TYPICAL SECTIONS

SCALE: SHEET 1 OF 10 SHEETS STA. TO STA.

F.A.I RTE.	SECTION	COUNTY	TOTAL SHEETS	SHEET NO.
*	(201-3)R & (4-1.5)R	WINNEBAGO	1685	39
		CONTRACT NO. 64C24		
		ILLINOIS	FED. AID PROJECT	

* FAI ROUTE 39 (I-39) & FAP 301 (US 20)

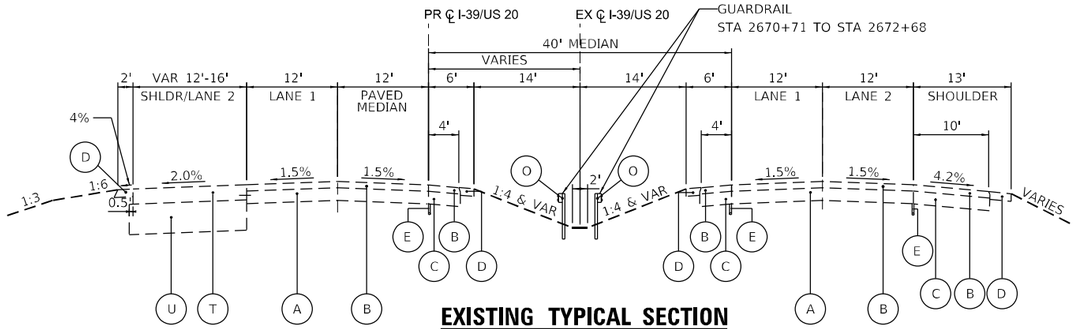

EXISTING TYPICAL SECTION

I–39 /US 20

STA 2655+23 TO STA 2658+27
STA 2675+09 TO STA 2676+97

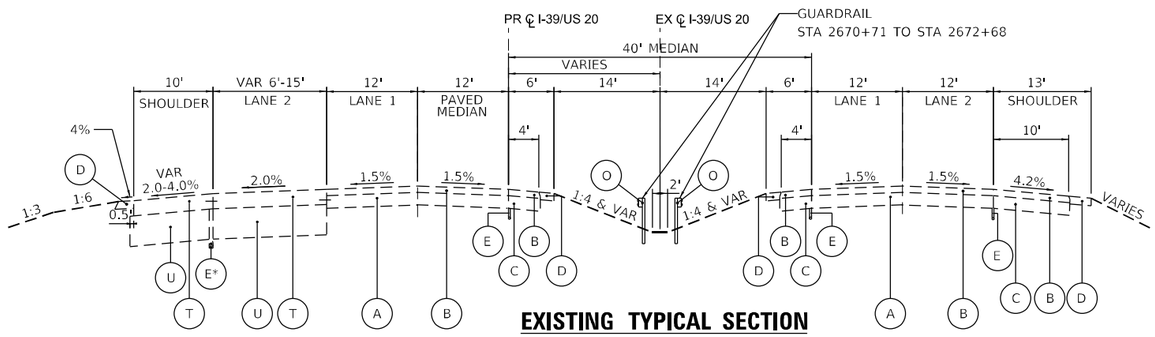

EXISTING TYPICAL SECTION

I–39 /US 20

STA 2658+27 TO STA 2675+09
*STA 2665+40 TO STA 2668+50

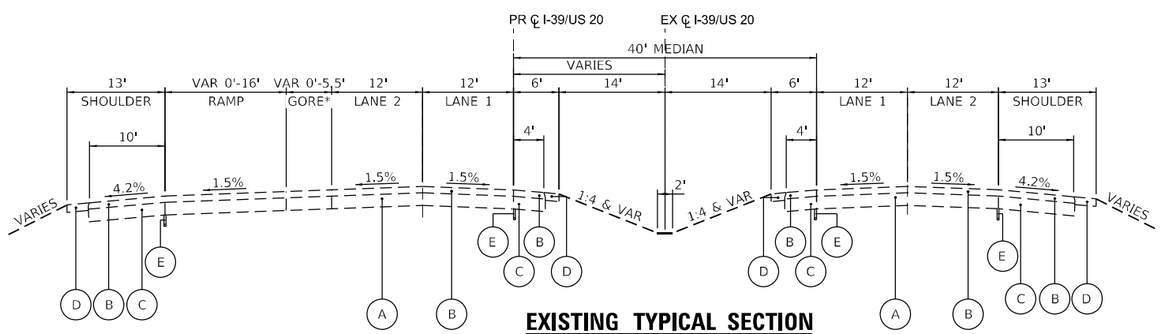

EXISTING TYPICAL SECTION

I–39 /US 20

STA 2701+00 TO STA 2706+91

*STA 2705+87 TO STA 2706+91

NOTE:
EXISTING PAVEMENT AND SHOULDER THICKNESSES ARE BASED ON RECORD PLANS. ACTUAL THICKNESSES SHOULD BE FIELD VERIFIED.

LEGEND

- (A) EXISTING 10" CONTINUOUSLY REINFORCED CONCRETE PAVEMENT
- (B) EXISTING 5" HMA OVERLAY
- (C) EXISTING 10" HMA SHOULDER
- (D) EXISTING AGGREGATE SHOULDER
- (E) EXISTING PIPE UNDERDRAINS
- (F) EXISTING PORTLAND CEMENT CONCRETE PAVEMENT 10 1/4" (JOINTED)
- (G) EXISTING STABILIZED SUBBASE - HMA, 4"
- (H) EXISTING AGGREGATE SUBGRADE, 12"
- (I) EXISTING COMBINATION CONCRETE CURB & GUTTER, TYPE B-6.24
- (J) EXISTING PAVEMENT (9" HMA OR 8.75" JOINTED PCC OVER 4" HMA STABILIZED SUBBASE) (SEE NOTE 1)
- (K) EXISTING TEMPORARY CONCRETE BARRIER
- (L) EXISTING 12" HMA SHOULDER
- (M) EXISTING PAVEMENT (11" HMA OR 10" JOINTED PCC OVER 4" HMA STABILIZED SUBBASE) (SEE NOTE 1)
- (N) EXISTING PAVEMENT (13.5" HMA OR 11" JOINTED PCC OVER 4" HMA STABILIZED SUBBASE) (SEE NOTE 1)
- (O) EXISTING GUARDRAIL
- (P) EXISTING HMA PATH
- (Q) EXISTING AGGREGATE
- (R) EXISTING 6" HMA SHOULDER
- (S) EXISTING PCC CROSSOVER PAVEMENT
- (T) EXISTING CLASS B PATCHES, 12 INCH
- (U) EXISTING AGGREGATE SUBGRADE, 24"

NOTES:
1. ASSUME JOINTED PCC OVER HMA FOR BIDDING PURPOSES

MODEL: Ex Typ-1 [Sheet]
FILE NAME: c:\pwworkdir\benesch projects\projects\d0173845\D2864C24-MIL-sht-ExTypSect.dgn

USER NAME = agibson	DESIGNED - J.MAJCHER	REVISED -	STATE OF ILLINOIS DEPARTMENT OF TRANSPORTATION
	DRAWN - J.MAJCHER	REVISED -	
PLOT SCALE = 0.16666633 ' / in.	CHECKED - A. GIBSON	REVISED -	
PLOT DATE = 2/6/2025	DATE - 02/27/24	REVISED -	

EXISTING TYPICAL SECTIONS

SCALE: 1"=10' | SHEET 2 OF 10 SHEETS | STA. TO STA.

F.A.I RTE.	SECTION	COUNTY	TOTAL SHEETS	SHEET NO.
*	(201-3)R & (4-1.5)R	WINNEBAGO	1685	40
		CONTRACT NO. 64C24		
		ILLINOIS	FED. AID PROJECT	

* FAI ROUTE 39 (I-39) & FAP 301 (US 20)

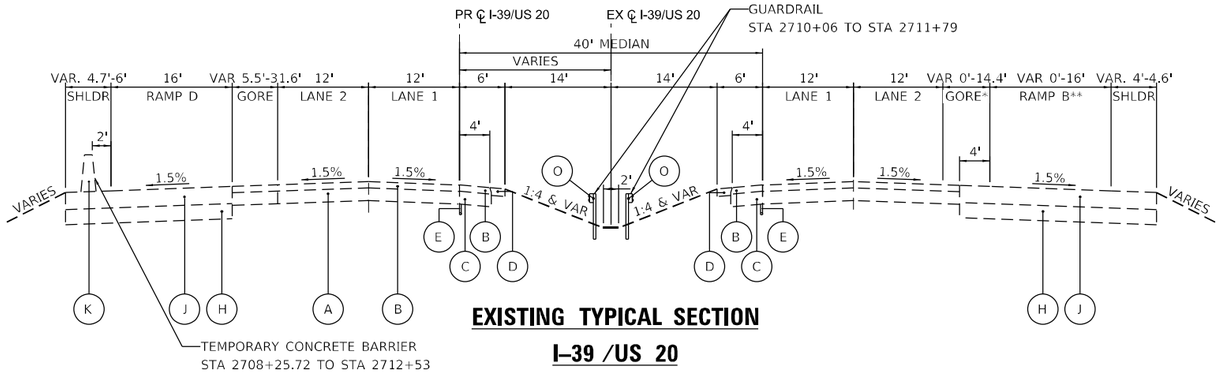

EXISTING TYPICAL SECTION

I–39 /US 20

STA 2706+91 TO STA 2711+79

*STA 2713+50 TO STA 2711+79
**STA 2709+65 TO STA 2711+79

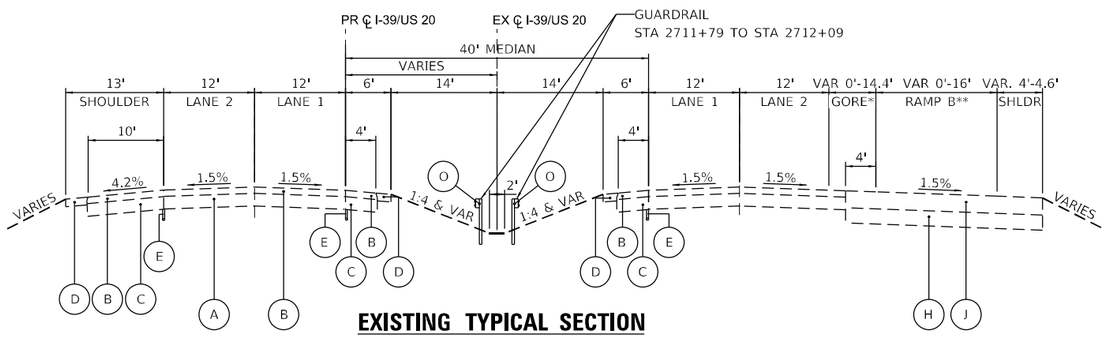

EXISTING TYPICAL SECTION

I–39 /US 20

STA 2711+79 TO STA 2716+04

*STA 2711+79 TO STA 2617+04
**STA 2711+79 TO STA 2617+04

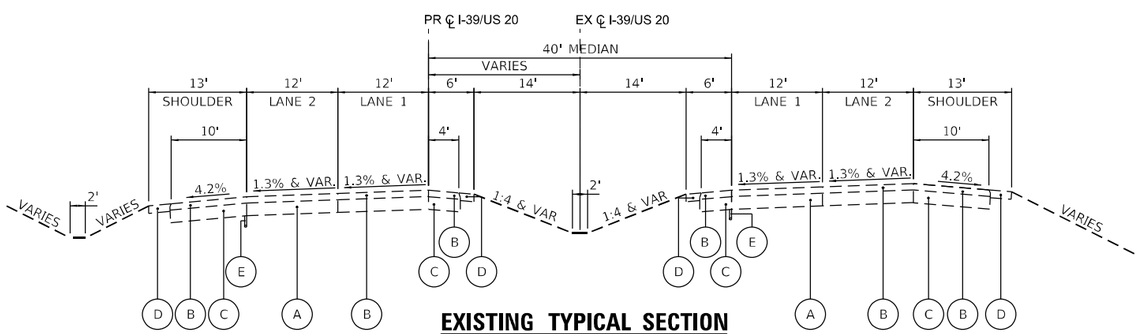

EXISTING TYPICAL SECTION

I–39 /US 20

2716+04 TO STA 2719+70

NOTE:
EXISTING PAVEMENT AND SHOULDER THICKNESSES ARE BASED ON RECORD PLANS. ACTUAL THICKNESSES SHOULD BE FIELD VERIFIED.

LEGEND

- (A) EXISTING 10" CONTINUOUSLY REINFORCED CONCRETE PAVEMENT
- (B) EXISTING 5" HMA OVERLAY
- (C) EXISTING 10" HMA SHOULDER
- (D) EXISTING AGGREGATE SHOULDER
- (E) EXISTING PIPE UNDERDRAINS
- (F) EXISTING PORTLAND CEMENT CONCRETE PAVEMENT 10 1/4" (JOINTED)
- (G) EXISTING STABILIZED SUBBASE - HMA, 4"
- (H) EXISTING AGGREGATE SUBGRADE, 12"
- (I) EXISTING COMBINATION CONCRETE CURB & GUTTER, TYPE B-6.24
- (J) EXISTING PAVEMENT (9" HMA OR 8.75" JOINTED PCC OVER 4" HMA STABILIZED SUBBASE) (SEE NOTE 1)
- (K) EXISTING TEMPORARY CONCRETE BARRIER
- (L) EXISTING 12" HMA SHOULDER
- (M) EXISTING PAVEMENT (11" HMA OR 10" JOINTED PCC OVER 4" HMA STABILIZED SUBBASE) (SEE NOTE 1)
- (N) EXISTING PAVEMENT (13.5" HMA OR 11" JOINTED PCC OVER 4" HMA STABILIZED SUBBASE) (SEE NOTE 1)
- (O) EXISTING GUARDRAIL
- (P) EXISTING HMA PATH
- (Q) EXISTING AGGREGATE
- (R) EXISTING 6" HMA SHOULDER
- (S) EXISTING PCC CROSSOVER PAVEMENT
- (T) EXISTING CLASS B PATCHES, 12 INCH
- (U) EXISTING AGGREGATE SUBGRADE, 24"

NOTES:
1. ASSUME JOINTED PCC OVER HMA FOR BIDDING PURPOSES

MODEL: Ex Typ-2 [Sheet]
FILE NAME: c:\pwworkdir\benesch projects\projects\d0173845\D2864C24-Mt-sht-ExTypSect.dgn

USER NAME = agibson	DESIGNED - J.MAJCHER	REVISED -	STATE OF ILLINOIS DEPARTMENT OF TRANSPORTATION
	DRAWN - J.MAJCHER	REVISED -	
PLOT SCALE = 0.16666633 ' / in.	CHECKED - A. GIBSON	REVISED -	
PLOT DATE = 2/6/2025	DATE - 02/27/24	REVISED -	

EXISTING TYPICAL SECTIONS

SCALE: 1"=10' | SHEET 3 OF 10 SHEETS | STA. TO STA.

F.A.I RTE.	SECTION	COUNTY	TOTAL SHEETS	SHEET NO.
*	(201-3)R & (4-1.5)R	WINNEBAGO	1685	41
		CONTRACT NO. 64C24		
	ILLINOIS	FED. AID PROJECT		

* FAI ROUTE 39 (I-39) & FAP 301 (US 20)

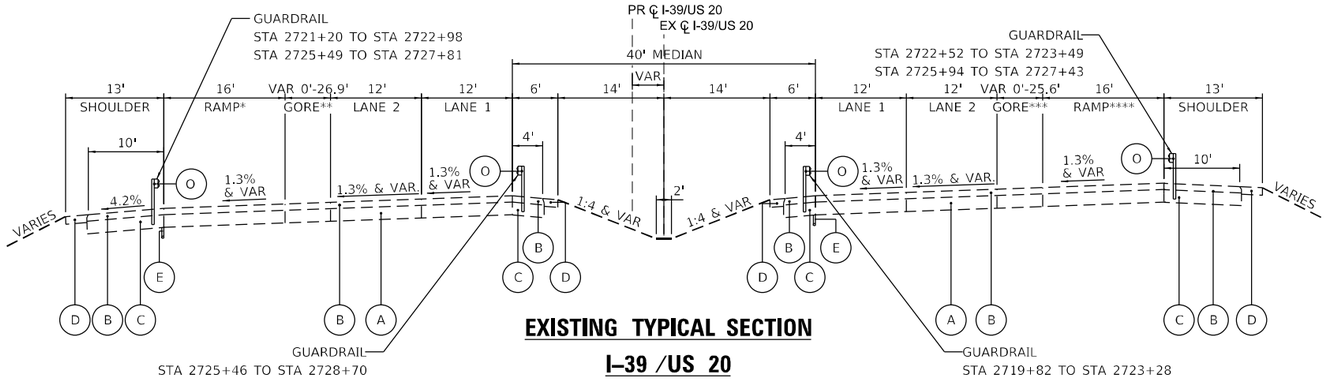

EXISTING TYPICAL SECTION

I–39 /US 20

STA 2719+70 TO STA 2729+31
BRIDGE GAP STA 2722+98 TO STA 2725+91
(SN 101-0071 AND SN 101-0072)

*STA 2719+70 TO STA 2727+33
**STA 2719+70 TO STA 2720+97 AND STA 2726+45 TO STA 2727+33
***STA 2721+60 TO STA 2723+05 AND STA 2727+82 TO STA 2729+20
****STA 2721+60 TO STA 2729+20

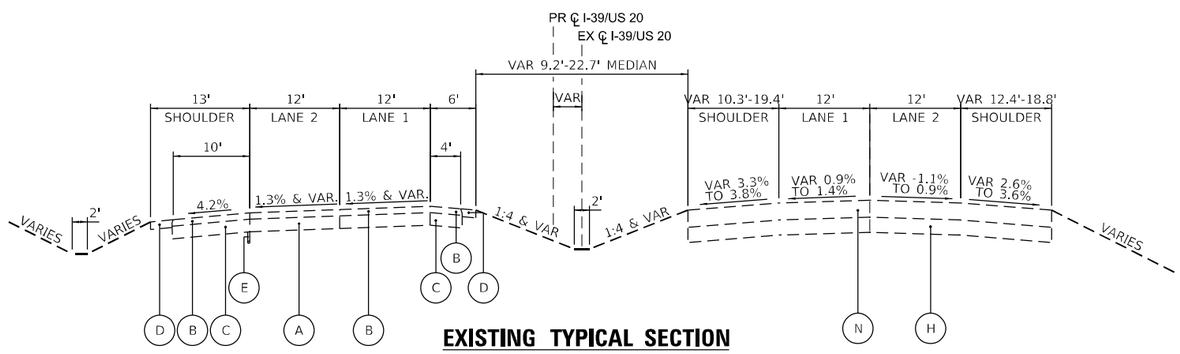

EXISTING TYPICAL SECTION

I–39 /US 20

STA 2729+31 TO STA 2731+47

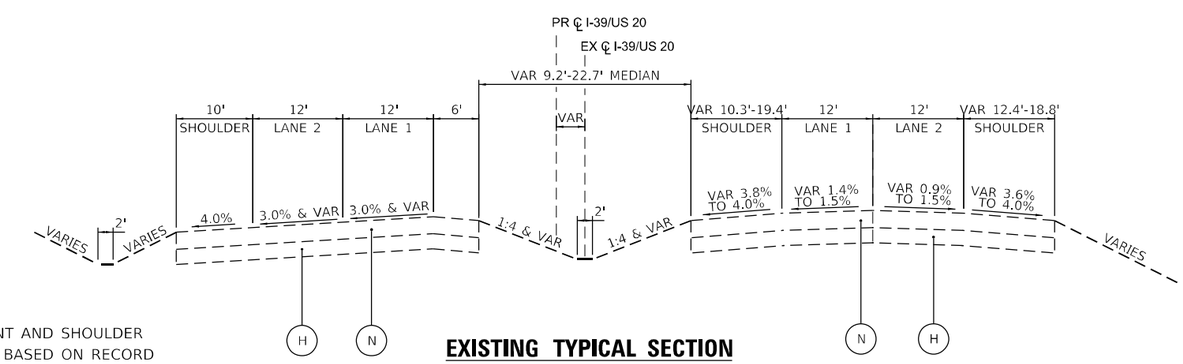

NOTE:
EXISTING PAVEMENT AND SHOULDER THICKNESSES ARE BASED ON RECORD PLANS. ACTUAL THICKNESSES SHOULD BE FIELD VERIFIED.

EXISTING TYPICAL SECTION

I–39 /US 20

STA 2731+47 TO STA 2732+35

LEGEND

- (A) EXISTING 10" CONTINUOUSLY REINFORCED CONCRETE PAVEMENT
- (B) EXISTING 5" HMA OVERLAY
- (C) EXISTING 10" HMA SHOULDER
- (D) EXISTING AGGREGATE SHOULDER
- (E) EXISTING PIPE UNDERDRAINS
- (F) EXISTING PORTLAND CEMENT CONCRETE PAVEMENT 10 1/4" (JOINTED)
- (G) EXISTING STABILIZED SUBBASE - HMA, 4"
- (H) EXISTING AGGREGATE SUBGRADE, 12"
- (I) EXISTING COMBINATION CONCRETE CURB & GUTTER, TYPE B-6.24
- (J) EXISTING PAVEMENT (9" HMA OR 8.75" JOINTED PCC OVER 4" HMA STABILIZED SUBBASE) (SEE NOTE 1)
- (K) EXISTING TEMPORARY CONCRETE BARRIER
- (L) EXISTING 12" HMA SHOULDER
- (M) EXISTING PAVEMENT (11" HMA OR 10" JOINTED PCC OVER 4" HMA STABILIZED SUBBASE) (SEE NOTE 1)
- (N) EXISTING PAVEMENT (13.5" HMA OR 11" JOINTED PCC OVER 4" HMA STABILIZED SUBBASE) (SEE NOTE 1)
- (O) EXISTING GUARDRAIL
- (P) EXISTING HMA PATH
- (Q) EXISTING AGGREGATE
- (R) EXISTING 6" HMA SHOULDER
- (S) EXISTING PCC CROSSOVER PAVEMENT
- (T) EXISTING CLASS B PATCHES, 12 INCH
- (U) EXISTING AGGREGATE SUBGRADE, 24"

NOTES:
1. ASSUME JOINTED PCC OVER HMA FOR BIDDING PURPOSES

MODEL: Ex Typ-3 [Sheet]
FILE NAME: c:\pwworkdir\benesch.projects\projects\d0173845\D264C24-ML-sht-ExTypSect.dgn

USER NAME = agibson	DESIGNED - J.MAJCHER	REVISED -	STATE OF ILLINOIS DEPARTMENT OF TRANSPORTATION
	DRAWN - J.MAJCHER	REVISED -	
PLOT SCALE = 0.16666633 ' / in.	CHECKED - A. GIBSON	REVISED -	
PLOT DATE = 2/6/2025	DATE - 02/27/24	REVISED -	

EXISTING TYPICAL SECTIONS

SCALE: 1"=10' | SHEET 4 OF 10 SHEETS | STA. TO STA.

F.A.I RTE.	SECTION	COUNTY	TOTAL SHEETS	SHEET NO.
*	(201-3)R & (4-1,5)R	WINNEBAGO	1685	42
		CONTRACT NO. 64C24		
		ILLINOIS	FED. AID PROJECT	

* FAI ROUTE 39 (I-39) & FAP 301 (US 20)

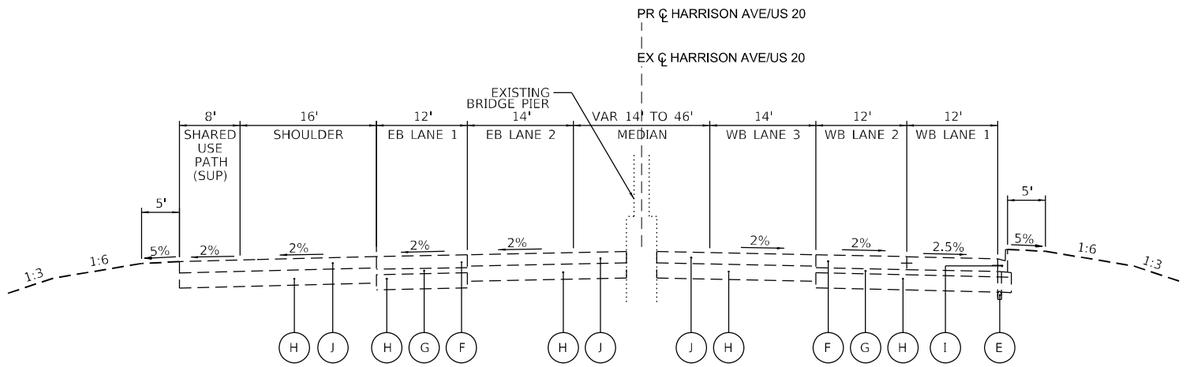

EXISTING TYPICAL SECTION
HARRISON AVE / US 20

STA 151+35 TO STA 1312+78

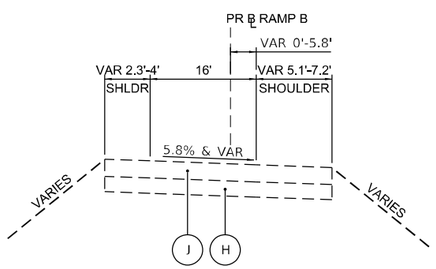

EXISTING TYPICAL SECTION
RAMP B

STA 216+00 TO STA 217+14

NOTE:
EXISTING PAVEMENT AND SHOULDER THICKNESSES ARE BASED ON RECORD PLANS. ACTUAL THICKNESSES SHOULD BE FIELD VERIFIED.

LEGEND

- (A) EXISTING 10" CONTINUOUSLY REINFORCED CONCRETE PAVEMENT
- (B) EXISTING 5" HMA OVERLAY
- (C) EXISTING 10" HMA SHOULDER
- (D) EXISTING AGGREGATE SHOULDER
- (E) EXISTING PIPE UNDERDRAINS
- (F) EXISTING PORTLAND CEMENT CONCRETE PAVEMENT 10 1/4" (JOINTED)
- (G) EXISTING STABILIZED SUBBASE - HMA, 4"
- (H) EXISTING AGGREGATE SUBGRADE, 12"
- (I) EXISTING COMBINATION CONCRETE CURB & GUTTER, TYPE B-6.24
- (J) EXISTING PAVEMENT (9" HMA OR 8.75" JOINTED PCC OVER 4" HMA STABILIZED SUBBASE) (SEE NOTE 1)
- (K) EXISTING TEMPORARY CONCRETE BARRIER
- (L) EXISTING 12" HMA SHOULDER
- (M) EXISTING PAVEMENT (11" HMA OR 10" JOINTED PCC OVER 4" HMA STABILIZED SUBBASE) (SEE NOTE 1)
- (N) EXISTING PAVEMENT (13.5" HMA OR 11" JOINTED PCC OVER 4" HMA STABILIZED SUBBASE) (SEE NOTE 1)
- (O) EXISTING GUARDRAIL
- (P) EXISTING HMA PATH
- (Q) EXISTING AGGREGATE
- (R) EXISTING 6" HMA SHOULDER
- (S) EXISTING PCC CROSSOVER PAVEMENT
- (T) EXISTING CLASS B PATCHES, 12 INCH
- (U) EXISTING AGGREGATE SUBGRADE, 24"

NOTES:
1. ASSUME JOINTED PCC OVER HMA FOR BIDDING PURPOSES

MODEL: Ex Typ-4 [Sheet]
FILE NAME: c:\pwworkdir\benesch.projects\projects\d0173845\D264C24-ML-sht-ExTypSect.dgn

USER NAME = agibson	DESIGNED - J.MAJCHER	REVISED -	STATE OF ILLINOIS DEPARTMENT OF TRANSPORTATION
	DRAWN - J.MAJCHER	REVISED -	
PLOT SCALE = 0.16666633 ' / in.	CHECKED - A. GIBSON	REVISED -	
PLOT DATE = 2/6/2025	DATE - 02/27/24	REVISED -	

EXISTING TYPICAL SECTIONS

SCALE: 1"=10' | SHEET 5 OF 10 SHEETS | STA. TO STA.

F.A.I RTE.	SECTION	COUNTY	TOTAL SHEETS	SHEET NO.
*	(201-3)R & (4-1,5)R	WINNEBAGO	1685	43

CONTRACT NO. 64C24

ILLINOIS | FED. AID PROJECT

* FAI ROUTE 39 (I-39) & FAP 301 (US 20)

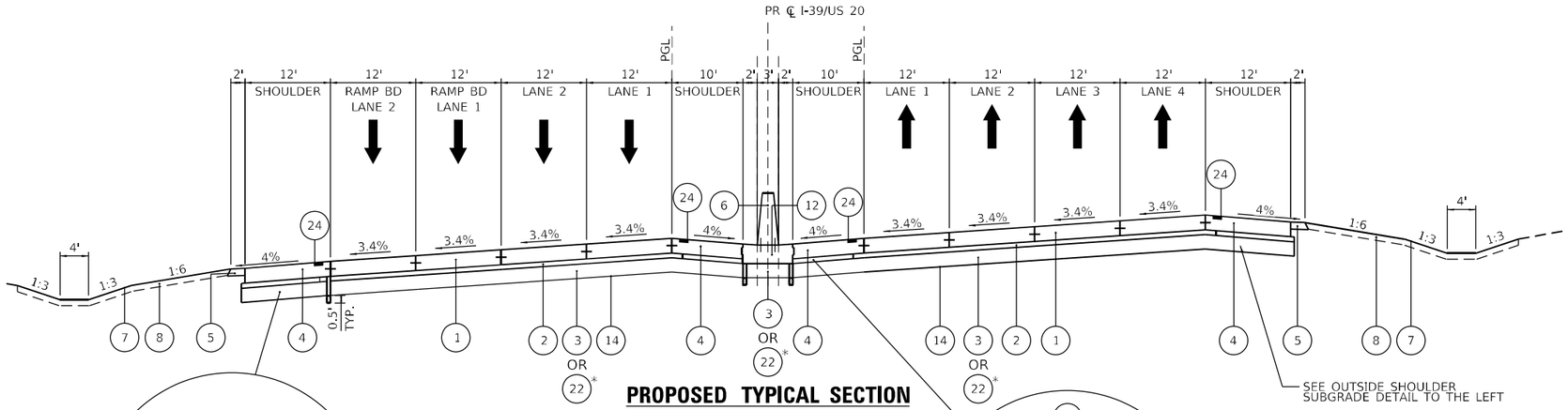

PROPOSED TYPICAL SECTION

I-39/US 20

STA 2620+83 TO STA 2630+45

*STA 2620+83 TO STA 2625+50

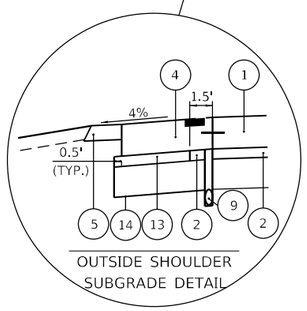

OUTSIDE SHOULDER SUBGRADE DETAIL

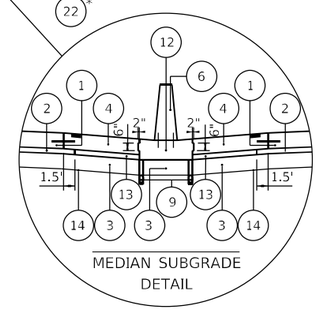

MEDIAN SUBGRADE DETAIL

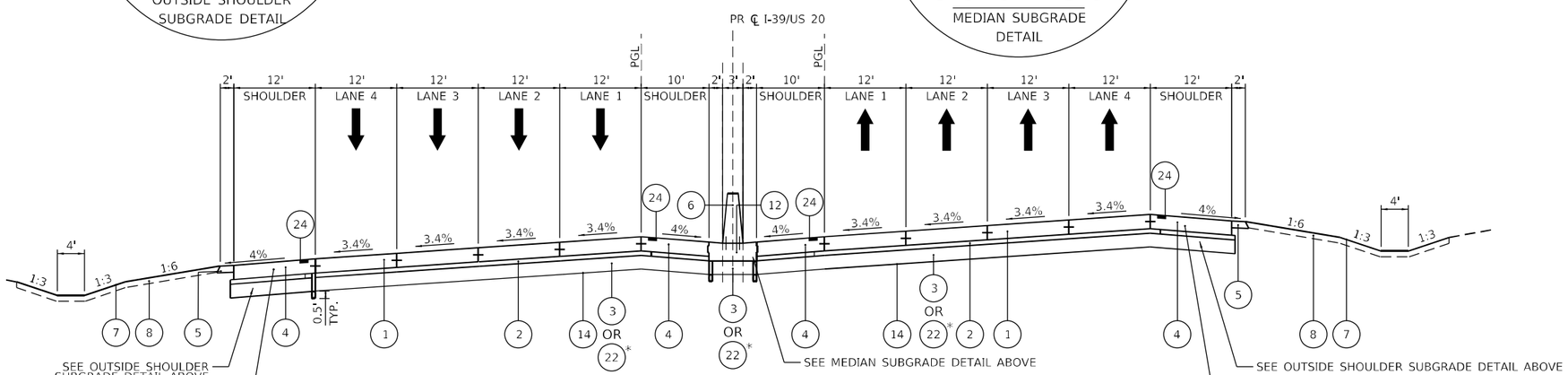

PROPOSED TYPICAL SECTION

I-39/US 20

STA 2630+45 TO STA 2647+07
BRIDGE GAP STA 2647+07 TO STA 2649+47
(SEE SN 101-0208 AND SN 101-0209 PLANS)
STA 2649+47 TO STA 2660+91

*STA 2656+00 TO STA 2660+91

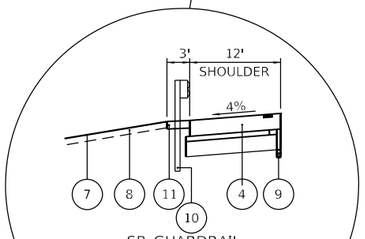

SB GUARDRAIL
STA 2636+27 TO STA 2646+93
STA 2649+02 TO STA 2651+82
STA 2654+52 TO STA 2660+91

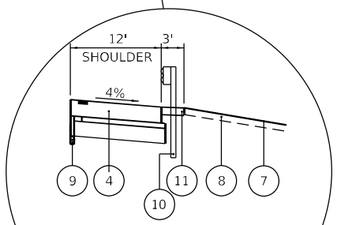

NB GUARDRAIL
STA 2634+70 TO STA 2647+55
STA 2649+57 TO STA 2655+40

LEGEND

1. CONTINUOUSLY REINFORCED PORTLAND CEMENT CONCRETE PAVEMENT 12 1/2"
2. STABILIZED SUBBASE - HOT-MIX ASPHALT, 4"
3. AGGREGATE SUBGRADE IMPROVEMENT, 12"
4. PORTLAND CEMENT CONCRETE SHOULDERS, 12 1/2"
5. AGGREGATE SHOULDERS, TYPE A, 6"
6. CONCRETE BARRIER, DOUBLE FACE, 44" HEIGHT OR CONCRETE BARRIER, VARIABLE CROSS SECTION 44 INCH HEIGHT (SEE ROADWAY PLANS)
7. SEEDING (SEE NOTE 5)
8. TOPSOIL EXCAVATION AND PLACEMENT (4" PROPOSED THICKNESS)
9. PIPE UNDERDRAINS 6"
10. STEEL PLATE BEAM GUARDRAIL, TYPE A, 6 FOOT POSTS
11. HOT MIX ASPHALT STABILIZATION 6" AT STEEL PLATE BEAM GUARDRAIL
12. CONCRETE BARRIER BASE (SPECIAL)
13. SHOULDER SUBBASE - CA 6 or 8, 4" (COST TO BE INCLUDED IN THE PCC SHOULDER)
14. GEOTECHNICAL REINFORCEMENT
15. NOISE WALL (SEE NOTE 6)
16. PORTLAND CEMENT CONCRETE PAVEMENT 10 1/4" (JOINTED)
17. COMBINATION CONCRETE CURB & GUTTER, TYPE B-6.24
18. CONCRETE MEDIAN SURFACE, 4 INCH
19. SUBBASE GRANULAR MATERIAL, TYPE B 6"
20. 4" HOT-MIX ASPHALT SURFACE COURSE, IL-9.5FG, N50
21. AGGREGATE BASE COURSE, TYPE A 6"
22. AGGREGATE SUBGRADE IMPROVEMENT, 18"
23. PORTLAND CEMENT CONCRETE SHOULDERS, 10 1/4"
24. SHOULDER RUMBLE STRIPS, 16 INCH
25. AGGREGATE SHOULDERS, TYPE A 4"
26. PORTLAND CEMENT CONCRETE SIDEWALK 4 INCH
27. CONCRETE CURB, TYPE B
28. PORTLAND CEMENT CONCRETE SIDEWALK 5 INCH
29. AGGREGATE BASE COURSE, TYPE B 4"
30. CONCRETE GUTTER, TYPE A

NOTES

1. SEE HOT-MIX ASPHALT MIXTURE REQUIREMENTS CHART FOR MIXTURE DESIGN.
2. FOR SUPERELEVATION TRANSITIONS, SEE MAINLINE DETAIL SHEETS.
3. SEE DRAINAGE PLANS FOR LOCATIONS OF PIPE UNDERDRAINS AND STRUCTURES.
4. SEE CROSS SECTIONS FOR SIDE SLOPE AND DITCH DETAILS.
5. SEE LANDSCAPING PLANS FOR SEEDING TYPES AND LOCATIONS.
6. SEE NOISE WALL PLANS FOR DETAILS.
7. PER HIGHWAY STANDARDS 421201 AND 420206, THE CONTRACTOR SHALL PAVE THE 4" STABILIZED SUBBASE AS SHOWN. ADDITIONAL WIDTH SHALL BE REMOVED AND REPLACED WITH CA6 OR CA8 STONE. REMOVAL OF ADDITIONAL WIDTH STABILIZED SUBBASE WILL NOT BE MEASURED FOR PAYMENT AND IS INCLUDED IN THE ITEM STABILIZED SUBBASE - HOT-MIX ASPHALT, 4".

MODEL: Pr Typ Sect [Sheet]
FILE NAME: c:\pwworkin\benesch projects\projects\d0173845\D264C24-ML-sht-PrTypSect.dgn

benesch
Alfred Benesch & Company
35 W Wacker Drive, Suite 3300
Chicago, Illinois 60601
312-565-0450 Job No. 10800.00

USER NAME = agibson	DESIGNED - J.MAJCHER	REVISED -	
	DRAWN - J.MAJCHER	REVISED -	
PLOT SCALE = $SCALE$	CHECKED - A. GIBSON	REVISED -	
PLOT DATE = 2/13/2025	DATE - 02/27/24	REVISED -	

STATE OF ILLINOIS
DEPARTMENT OF TRANSPORTATION

PROPOSED TYPICAL SECTIONS

SCALE: SHEET 6 OF 10 SHEETS STA. TO STA.

F.A.I RTE.	SECTION	COUNTY	TOTAL SHEETS	SHEET NO.
*	(201-3)R & (4-1.5)R	WINNEBAGO	1685	44
		CONTRACT NO. 64C24		
	ILLINOIS	FED. AID PROJECT		

* FAI ROUTE 39 (I-39) & FAP 301 (US 20)

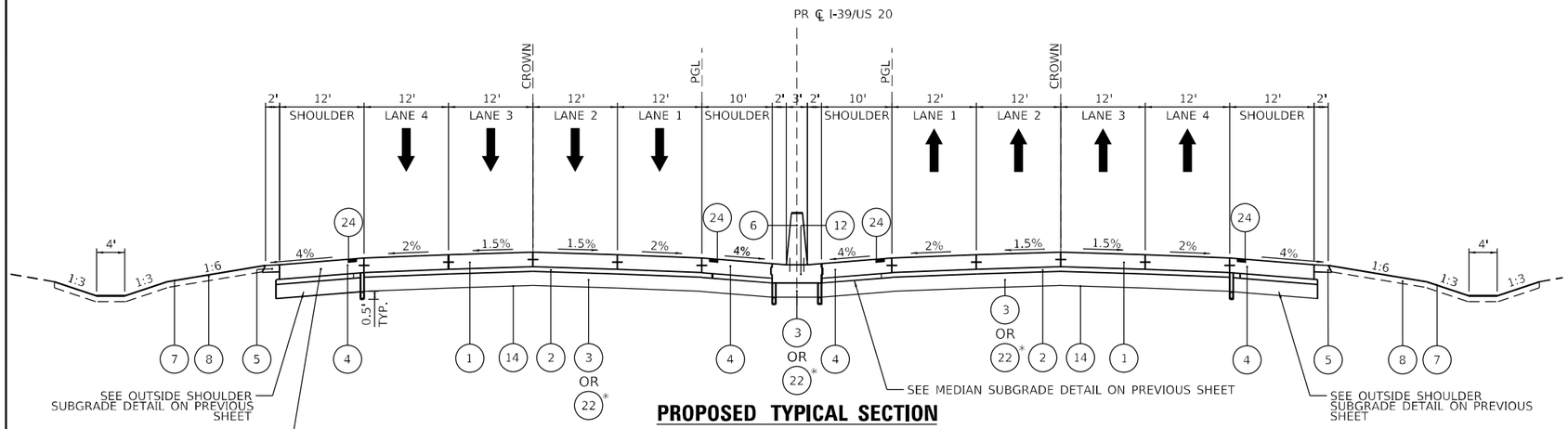

PROPOSED TYPICAL SECTION

I-39/US 20

STA 2660+91 TO STA 2666+00

*STA 2660+91 TO STA 2663+50

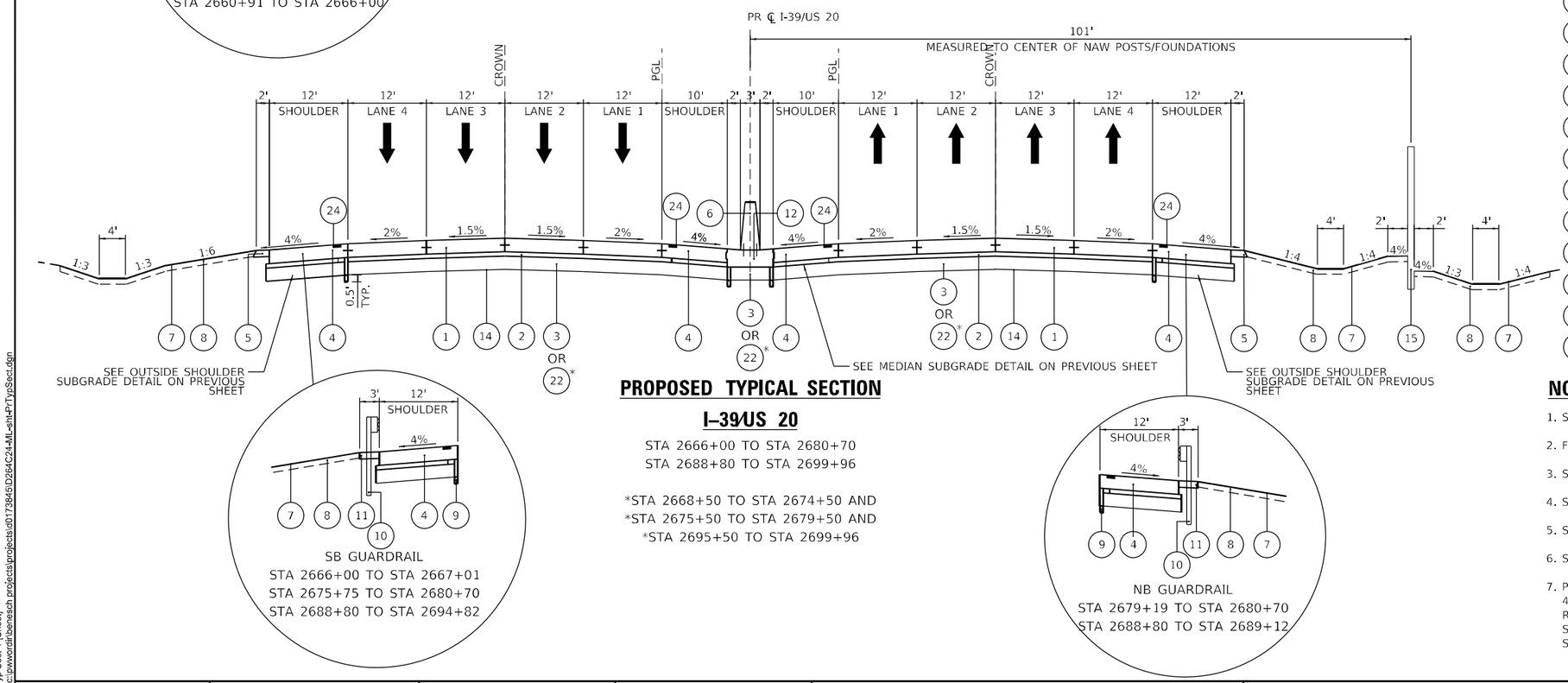

PROPOSED TYPICAL SECTION

I-39/US 20

STA 2666+00 TO STA 2680+70
STA 2688+80 TO STA 2699+96

*STA 2668+50 TO STA 2674+50 AND
*STA 2675+50 TO STA 2679+50 AND
*STA 2695+50 TO STA 2699+96

LEGEND

1. CONTINUOUSLY REINFORCED PORTLAND CEMENT CONCRETE PAVEMENT 12 1/2"
2. STABILIZED SUBBASE - HOT-MIX ASPHALT, 4"
3. AGGREGATE SUBGRADE IMPROVEMENT, 12"
4. PORTLAND CEMENT CONCRETE SHOULDERS, 12 1/2"
5. AGGREGATE SHOULDERS, TYPE A, 6"
6. CONCRETE BARRIER, DOUBLE FACE, 44" HEIGHT OR CONCRETE BARRIER, VARIABLE CROSS SECTION 44 INCH HEIGHT (SEE ROADWAY PLANS)
7. SEEDING (SEE NOTE 5)
8. TOPSOIL EXCAVATION AND PLACEMENT (4" PROPOSED THICKNESS)
9. PIPE UNDERDRAINS 6"
10. STEEL PLATE BEAM GUARDRAIL, TYPE A, 6 FOOT POSTS
11. HOT MIX ASPHALT STABILIZATION 6" AT STEEL PLATE BEAM GUARDRAIL
12. CONCRETE BARRIER BASE (SPECIAL)
13. SHOULDER SUBBASE - CA 6 or 8, 4" (COST TO BE INCLUDED IN THE PCC SHOULDER)
14. GEOTECHNICAL REINFORCEMENT
15. NOISE WALL (SEE NOTE 6)
16. PORTLAND CEMENT CONCRETE PAVEMENT 10 1/4" (JOINTED)
17. COMBINATION CONCRETE CURB & GUTTER, TYPE B-6.24
18. CONCRETE MEDIAN SURFACE, 4 INCH
19. SUBBASE GRANULAR MATERIAL, TYPE B 6"
20. 4" HOT-MIX ASPHALT SURFACE COURSE, IL-9.5FG, N50
21. AGGREGATE BASE COURSE, TYPE A 6"
22. AGGREGATE SUBGRADE IMPROVEMENT, 18"
23. PORTLAND CEMENT CONCRETE SHOULDERS, 10 1/4"
24. SHOULDER RUMBLE STRIPS, 16 INCH
25. AGGREGATE SHOULDERS, TYPE A 4"
26. PORTLAND CEMENT CONCRETE SIDEWALK 4 INCH
27. CONCRETE CURB, TYPE B
28. PORTLAND CEMENT CONCRETE SIDEWALK 5 INCH
29. AGGREGATE BASE COURSE, TYPE B 4"
30. CONCRETE GUTTER, TYPE A

NOTES

1. SEE HOT-MIX ASPHALT MIXTURE REQUIREMENTS CHART FOR MIXTURE DESIGN.
2. FOR SUPERELEVATION TRANSITIONS, SEE MAINLINE DETAIL SHEETS.
3. SEE DRAINAGE PLANS FOR LOCATIONS OF PIPE UNDERDRAINS AND STRUCTURES.
4. SEE CROSS SECTIONS FOR SIDE SLOPE AND DITCH DETAILS.
5. SEE LANDSCAPING PLANS FOR SEEDING TYPES AND LOCATIONS.
6. SEE NOISE WALL PLANS FOR DETAILS.
7. PER HIGHWAY STANDARDS 421201 AND 420206, THE CONTRACTOR SHALL PAVE THE 4" STABILIZED SUBBASE AS SHOWN. ADDITIONAL WIDTH SHALL BE REMOVED AND REPLACED WITH CA6 OR CA8 STONE. REMOVAL OF ADDITIONAL WIDTH STABILIZED SUBBASE WILL NOT BE MEASURED FOR PAYMENT AND IS INCLUDED IN THE ITEM STABILIZED SUBBASE - HOT-MIX ASPHALT, 4".

MODEL: Pr Typ Sect-1 [Sheet]
FILE NAME: c:\pwworkdir\benesch projects\projects\d0173845\D284C24-Ml_sht-PrTypSect.dgn

benesch
Alfred Benesch & Company
35 W Wacker Drive, Suite 3300
Chicago, Illinois 60601
312-609-0450 Job No. 10800.00

USER NAME = jMajcher	DESIGNED - J.MAJCHER	REVISED -	
	DRAWN - J.MAJCHER	REVISED -	
PLOT SCALE = $SCALE$	CHECKED - A. GIBSON	REVISED -	
PLOT DATE = 4/29/2025	DATE - 02/27/24	REVISED -	

STATE OF ILLINOIS
DEPARTMENT OF TRANSPORTATION

PROPOSED TYPICAL SECTIONS

SCALE: SHEET 7 OF 10 SHEETS STA. TO STA.

F.A.I RTE.	SECTION	COUNTY	TOTAL SHEETS	SHEET NO.
*	(201-3)R & (4-1.5)R	WINNEBAGO	1685	45
		CONTRACT NO. 64C24		
		ILLINOIS	FED. AID PROJECT	

* FAI ROUTE 39 (I-39) & FAP 301 (US 20)

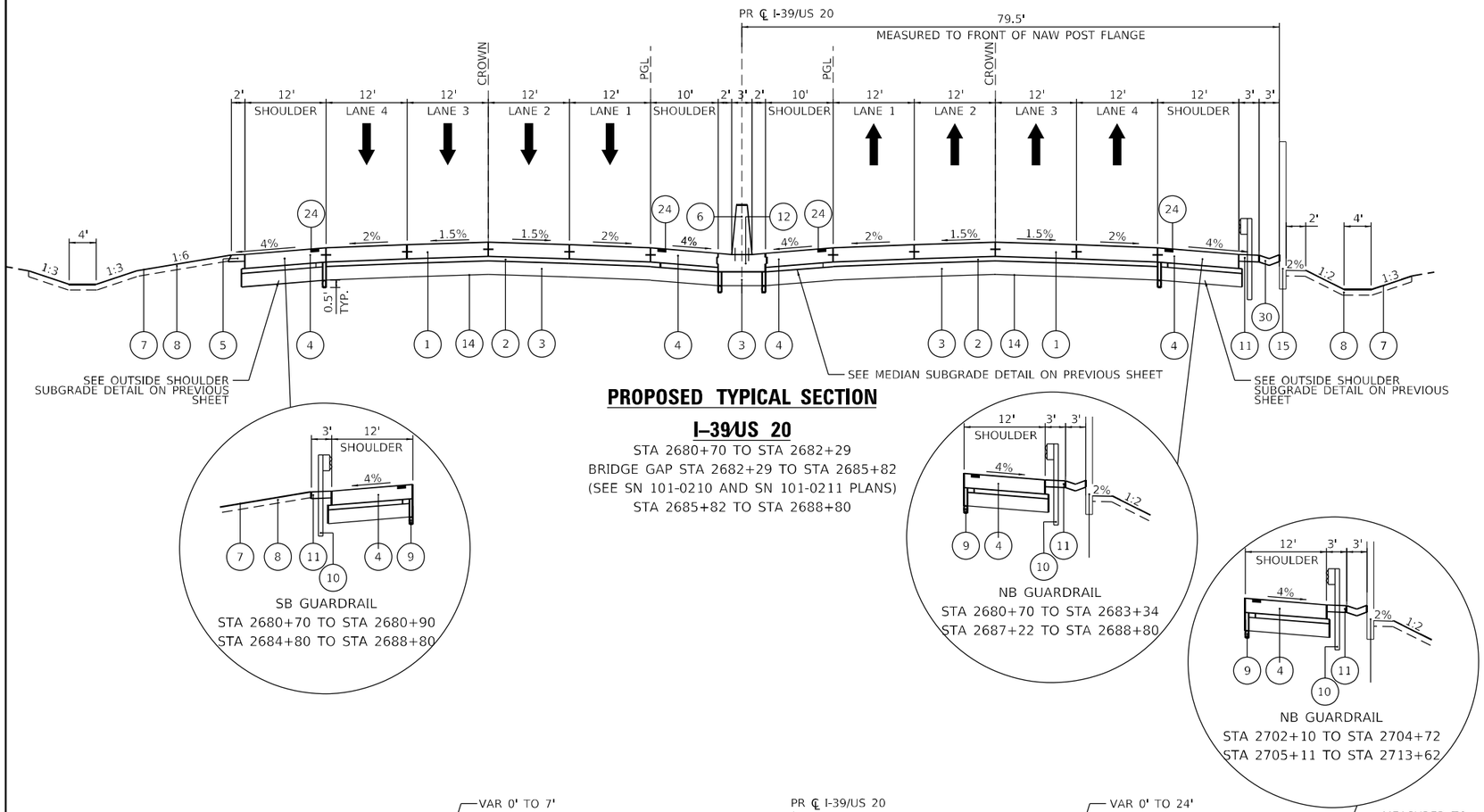

PROPOSED TYPICAL SECTION

I-39/US 20

STA 2680+70 TO STA 2682+29
BRIDGE GAP STA 2682+29 TO STA 2685+82
(SEE SN 101-0210 AND SN 101-0211 PLANS)
STA 2685+82 TO STA 2688+80

SB GUARDRAIL
STA 2680+70 TO STA 2680+90
STA 2684+80 TO STA 2688+80

NB GUARDRAIL
STA 2680+70 TO STA 2683+34
STA 2687+22 TO STA 2688+80

NB GUARDRAIL
STA 2702+10 TO STA 2704+72
STA 2705+11 TO STA 2713+62

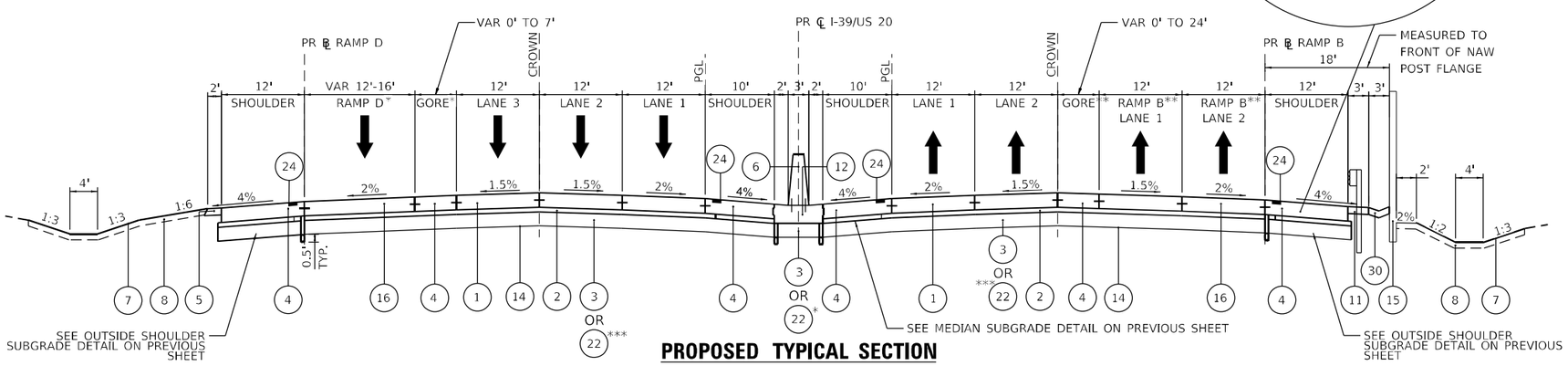

PROPOSED TYPICAL SECTION

I-39/US 20

STA 2699+96 TO STA 2715+79

*RAMP D LIMITS STA 2707+84 TO STA 2711+15
**RAMP B LIMITS STA 2710+52 TO STA 2715+80
***STA 2699+96 TO STA 2705+00

LEGEND

1. CONTINUOUSLY REINFORCED PORTLAND CEMENT CONCRETE PAVEMENT 12 1/2"
2. STABILIZED SUBBASE - HOT-MIX ASPHALT, 4"
3. AGGREGATE SUBGRADE IMPROVEMENT, 12"
4. PORTLAND CEMENT CONCRETE SHOULDERS, 12 1/2"
5. AGGREGATE SHOULDERS, TYPE A, 6"
6. CONCRETE BARRIER, DOUBLE FACE, 44" HEIGHT OR CONCRETE BARRIER, VARIABLE CROSS SECTION 44 INCH HEIGHT (SEE ROADWAY PLANS)
7. SEEDING (SEE NOTE 5)
8. TOPSOIL EXCAVATION AND PLACEMENT (4" PROPOSED THICKNESS)
9. PIPE UNDERDRAINS 6"
10. STEEL PLATE BEAM GUARDRAIL, TYPE A, 6 FOOT POSTS
11. HOT MIX ASPHALT STABILIZATION 6" AT STEEL PLATE BEAM GUARDRAIL
12. CONCRETE BARRIER BASE (SPECIAL)
13. SHOULDER SUBBASE - CA 6 or 8, 4" (COST TO BE INCLUDED IN THE PCC SHOULDER)
14. GEOTECHNICAL REINFORCEMENT
15. NOISE WALL (SEE NOTE 6)
16. PORTLAND CEMENT CONCRETE PAVEMENT 10 1/4" (JOINTED)
17. COMBINATION CONCRETE CURB & GUTTER, TYPE B-6.24
18. CONCRETE MEDIAN SURFACE, 4 INCH
19. SUBBASE GRANULAR MATERIAL, TYPE B 6"
20. 4" HOT-MIX ASPHALT SURFACE COURSE, IL-9.5FG, N50
21. AGGREGATE BASE COURSE, TYPE A 6"
22. AGGREGATE SUBGRADE IMPROVEMENT, 18"
23. PORTLAND CEMENT CONCRETE SHOULDERS, 10 1/4"
24. SHOULDER RUMBLE STRIPS, 16 INCH
25. AGGREGATE SHOULDERS, TYPE A 4"
26. PORTLAND CEMENT CONCRETE SIDEWALK 4 INCH
27. CONCRETE CURB, TYPE B
28. PORTLAND CEMENT CONCRETE SIDEWALK 5 INCH
29. AGGREGATE BASE COURSE, TYPE B 4"
30. CONCRETE GUTTER, TYPE A

NOTES

1. SEE HOT-MIX ASPHALT MIXTURE REQUIREMENTS CHART FOR MIXTURE DESIGN.
2. FOR SUPERELEVATION TRANSITIONS, SEE MAINLINE DETAIL SHEETS.
3. SEE DRAINAGE PLANS FOR LOCATIONS OF PIPE UNDERDRAINS AND STRUCTURES.
4. SEE CROSS SECTIONS FOR SIDE SLOPE AND DITCH DETAILS.
5. SEE LANDSCAPING PLANS FOR SEEDING TYPES AND LOCATIONS.
6. SEE NOISE WALL PLANS FOR DETAILS.
7. PER HIGHWAY STANDARDS 421201 AND 420206, THE CONTRACTOR SHALL PAVE THE 4" STABILIZED SUBBASE AS SHOWN. ADDITIONAL WIDTH SHALL BE REMOVED AND REPLACED WITH CA6 OR CA8 STONE. REMOVAL OF ADDITIONAL WIDTH STABILIZED SUBBASE WILL NOT BE MEASURED FOR PAYMENT AND IS INCLUDED IN THE ITEM STABILIZED SUBBASE - HOT-MIX ASPHALT, 4".

MODEL: Pr Typ Sect-2 [Sheet]
FILE NAME: c:\pwworkdir\benesch projects\projects\d0172845\D264C24-ML-sht-PrTypSect.dgn

benesch
Alfred Benesch & Company
35 W Wacker Drive, Suite 3300
Chicago, Illinois 60601
312.565.0450 Job No. 10800.00

USER NAME = jMajcher	DESIGNED - J.MAJCHER	REVISED -	
	DRAWN - J.MAJCHER	REVISED -	
PLOT SCALE = $SCALE$	CHECKED - A. GIBSON	REVISED -	
PLOT DATE = 4/29/2025	DATE - 02/27/24	REVISED -	

STATE OF ILLINOIS
DEPARTMENT OF TRANSPORTATION

PROPOSED TYPICAL SECTIONS

SCALE: SHEET 8 OF 10 SHEETS STA. TO STA.

F.A.I RTE.	SECTION	COUNTY	TOTAL SHEETS	SHEET NO.
*	(201-3)R & (4-1.5)R	WINNEBAGO	1685	46
		CONTRACT NO. 64C24		
		ILLINOIS FED. AID PROJECT		

* FAI ROUTE 39 (I-39) & FAP 301 (US 20)

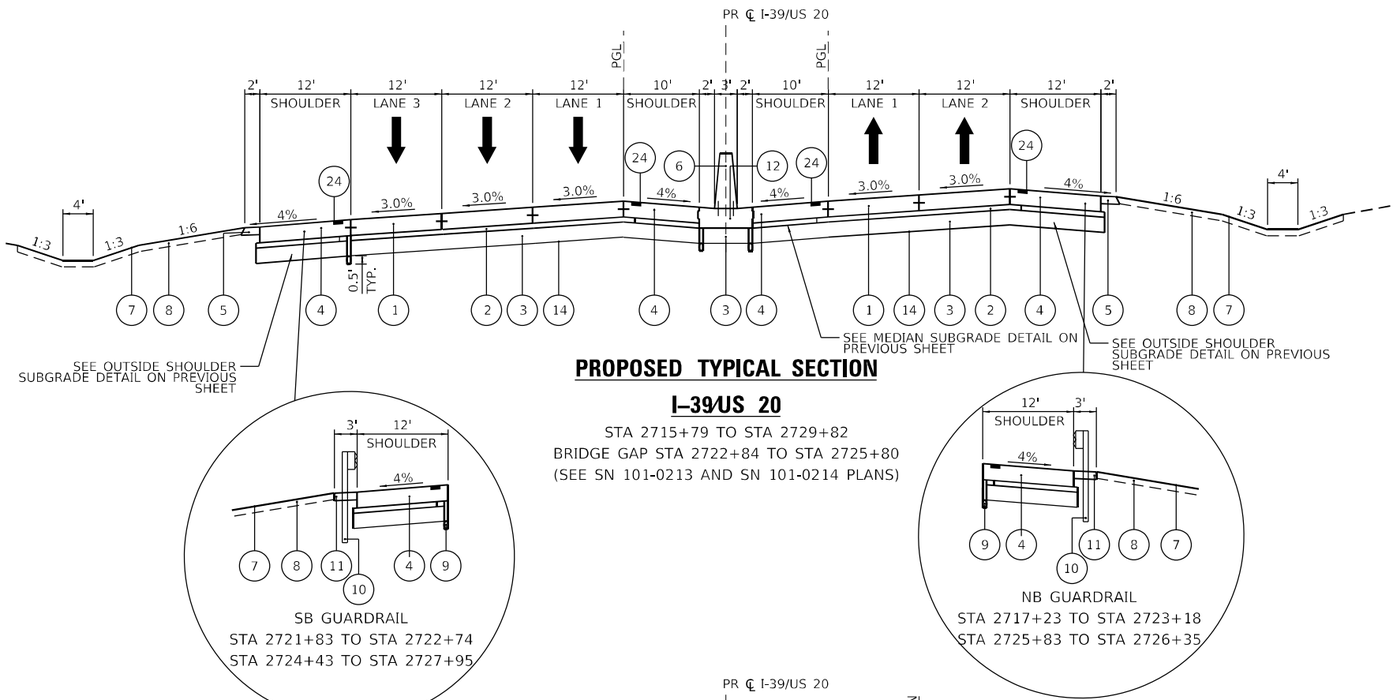

PROPOSED TYPICAL SECTION

I-39/US 20

STA 2715+79 TO STA 2729+82
BRIDGE GAP STA 2722+84 TO STA 2725+80
(SEE SN 101-0213 AND SN 101-0214 PLANS)

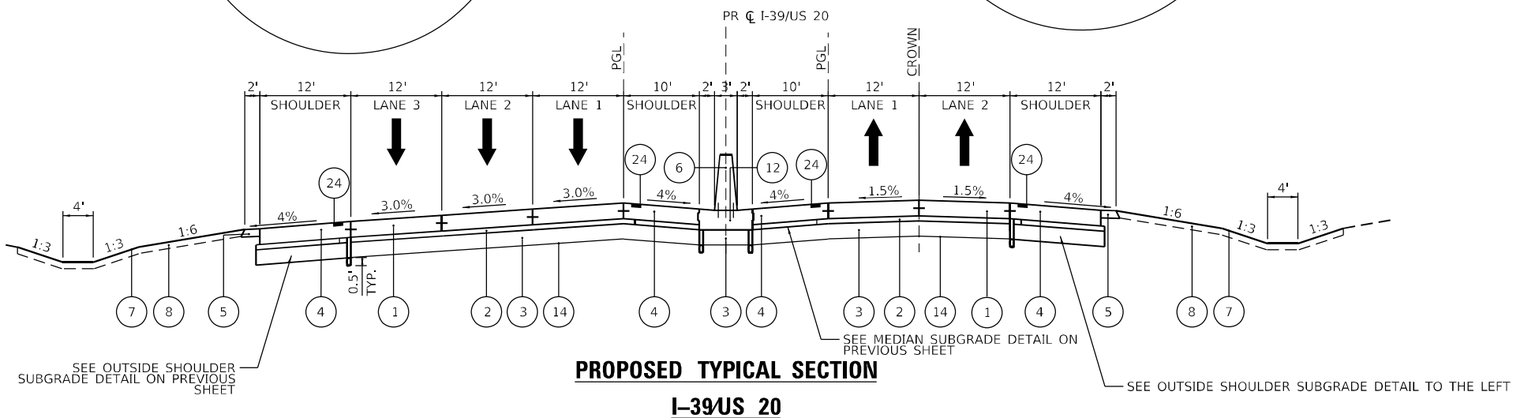

PROPOSED TYPICAL SECTION

I-39/US 20

STA 2729+82 TO STA 2732+35

LEGEND

1. CONTINUOUSLY REINFORCED PORTLAND CEMENT CONCRETE PAVEMENT 12 1/2"
2. STABILIZED SUBBASE - HOT-MIX ASPHALT, 4"
3. AGGREGATE SUBGRADE IMPROVEMENT, 12"
4. PORTLAND CEMENT CONCRETE SHOULDERS, 12 1/2"
5. AGGREGATE SHOULDERS, TYPE A, 6"
6. CONCRETE BARRIER, DOUBLE FACE, 44" HEIGHT OR CONCRETE BARRIER, VARIABLE CROSS SECTION 44 INCH HEIGHT (SEE ROADWAY PLANS)
7. SEEDING (SEE NOTE 5)
8. TOPSOIL EXCAVATION AND PLACEMENT (4" PROPOSED THICKNESS)
9. PIPE UNDERDRAINS 6"
10. STEEL PLATE BEAM GUARDRAIL, TYPE A, 6 FOOT POSTS
11. HOT MIX ASPHALT STABILIZATION 6" AT STEEL PLATE BEAM GUARDRAIL
12. CONCRETE BARRIER BASE (SPECIAL)
13. SHOULDER SUBBASE - CA 6 or 8, 4" (COST TO BE INCLUDED IN THE PCC SHOULDER)
14. GEOTECHNICAL REINFORCEMENT
15. NOISE WALL (SEE NOTE 6)
16. PORTLAND CEMENT CONCRETE PAVEMENT 10 1/4" (JOINTED)
17. COMBINATION CONCRETE CURB & GUTTER, TYPE B-6.24
18. CONCRETE MEDIAN SURFACE, 4 INCH
19. SUBBASE GRANULAR MATERIAL, TYPE B 6"
20. 4" HOT-MIX ASPHALT SURFACE COURSE, IL-9.5FG, N50
21. AGGREGATE BASE COURSE, TYPE A 6"
22. AGGREGATE SUBGRADE IMPROVEMENT, 18"
23. PORTLAND CEMENT CONCRETE SHOULDERS, 10 1/4"
24. SHOULDER RUMBLE STRIPS, 16 INCH
25. AGGREGATE SHOULDERS, TYPE A 4"
26. PORTLAND CEMENT CONCRETE SIDEWALK 4 INCH
27. CONCRETE CURB, TYPE B
28. PORTLAND CEMENT CONCRETE SIDEWALK 5 INCH
29. AGGREGATE BASE COURSE, TYPE B 4"
30. CONCRETE GUTTER, TYPE A

NOTES

1. SEE HOT-MIX ASPHALT MIXTURE REQUIREMENTS CHART FOR MIXTURE DESIGN.
2. FOR SUPERELEVATION TRANSITIONS, SEE MAINLINE DETAIL SHEETS.
3. SEE DRAINAGE PLANS FOR LOCATIONS OF PIPE UNDERDRAINS AND STRUCTURES.
4. SEE CROSS SECTIONS FOR SIDE SLOPE AND DITCH DETAILS.
5. SEE LANDSCAPING PLANS FOR SEEDING TYPES AND LOCATIONS.
6. SEE NOISE WALL PLANS FOR DETAILS.
7. PER HIGHWAY STANDARDS 421201 AND 420206, THE CONTRACTOR SHALL PAVE THE 4" STABILIZED SUBBASE AS SHOWN. ADDITIONAL WIDTH SHALL BE REMOVED AND REPLACED WITH CA6 OR CA8 STONE. REMOVAL OF ADDITIONAL WIDTH STABILIZED SUBBASE WILL NOT BE MEASURED FOR PAYMENT AND IS INCLUDED IN THE ITEM STABILIZED SUBBASE - HOT-MIX ASPHALT, 4".

MODEL: Pr Typ Sect-3 [Sheet]
FILE NAME: c:\pwworkdir\benesch projects\projects\d0172845\D284C24-\IL-sht-PrTypSect.dgn

benesch
Alfred Benesch & Company
35 W Wacker Drive, Suite 3200
Chicago, Illinois 60601
312-565-0450 Job No. 10800.00

USER NAME = jMajcher	DESIGNED - J. MAJCHER	REVISED -	
	DRAWN - J. MAJCHER	REVISED -	
PLOT SCALE = $SCALE$	CHECKED - A. GIBSON	REVISED -	
PLOT DATE = 4/29/2025	DATE -	REVISED -	

STATE OF ILLINOIS
DEPARTMENT OF TRANSPORTATION

PROPOSED TYPICAL SECTIONS

SCALE: | SHEET 9 OF 10 SHEETS | STA. TO STA.

F.A.I RTE.	SECTION	COUNTY	TOTAL SHEETS	SHEET NO.
*	(201-3)R & (4-1.5)R	WINNEBAGO	1685	47
		CONTRACT NO. 64C24		
	ILLINOIS	FED. AID PROJECT		

* FAI ROUTE 39 (I-39) & FAP 301 (US 20)

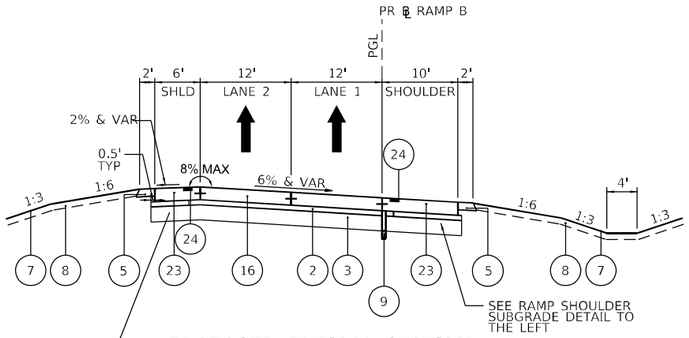

PROPOSED TYPICAL SECTION

RAMP B

STA 215+81 TO STA 217+14

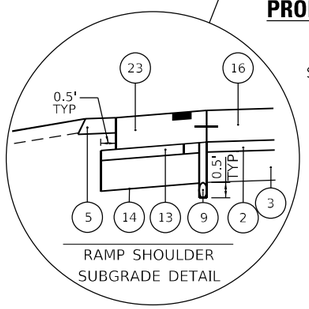

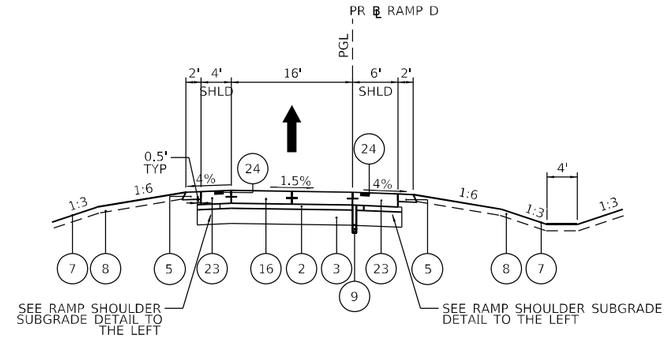

PROPOSED TYPICAL SECTION

RAMP D

STA 412+00 TO STA 413+30

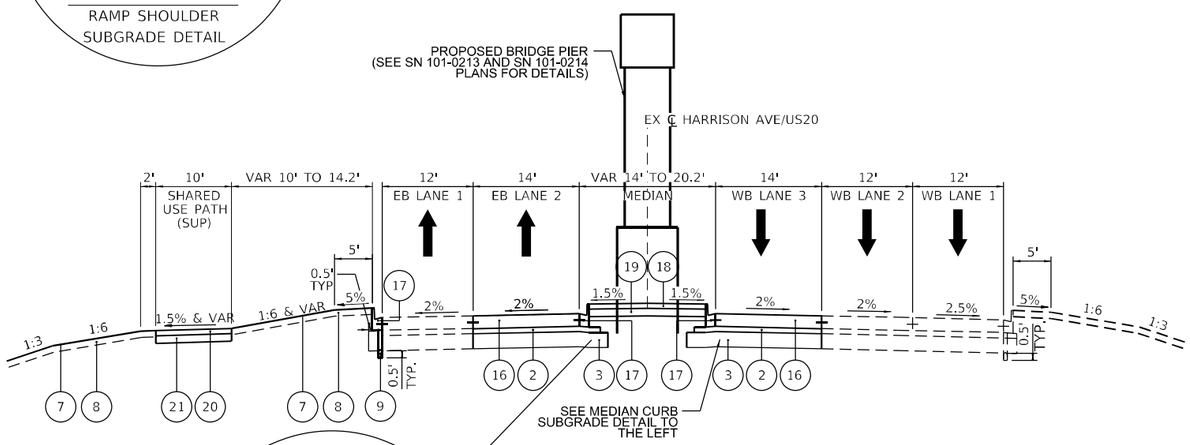

PROPOSED TYPICAL SECTION

HARRISON AVE / US 20

STA 151+35 TO STA 1312+78

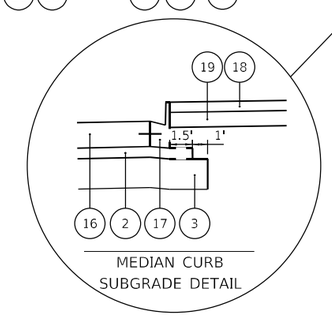

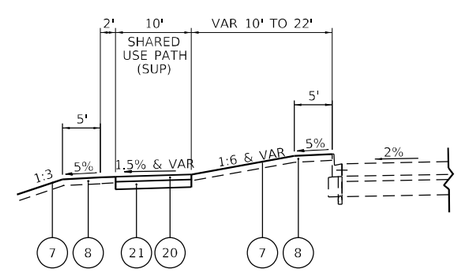

PROPOSED TYPICAL SECTION

SHARED USED PATH

STA 1336+16 TO STA 1338+28

LEGEND

1. CONTINUOUSLY REINFORCED PORTLAND CEMENT CONCRETE PAVEMENT 12 1/2"
2. STABILIZED SUBBASE - HOT-MIX ASPHALT, 4"
3. AGGREGATE SUBGRADE IMPROVEMENT, 12"
4. PORTLAND CEMENT CONCRETE SHOULDERS, 12 1/2"
5. AGGREGATE SHOULDERS, TYPE A, 6"
6. CONCRETE BARRIER, DOUBLE FACE, 44" HEIGHT OR CONCRETE BARRIER, VARIABLE CROSS SECTION 44 INCH HEIGHT (SEE ROADWAY PLANS)
7. SEEDING (SEE NOTE 5)
8. TOPSOIL EXCAVATION AND PLACEMENT (4" PROPOSED THICKNESS)
9. PIPE UNDERDRAINS 6"
10. STEEL PLATE BEAM GUARDRAIL, TYPE A, 6 FOOT POSTS
11. HOT MIX ASPHALT STABILIZATION 6" AT STEEL PLATE BEAM GUARDRAIL
12. CONCRETE BARRIER BASE
13. SHOULDER SUBBASE - CA 6 or 8, 4" (COST TO BE INCLUDED IN THE PCC SHOULDER)
14. GEOTECHNICAL REINFORCEMENT
15. NOISE WALL (SEE NOTE 6)
16. PORTLAND CEMENT CONCRETE PAVEMENT 10 1/4" (JOINTED)
17. COMBINATION CONCRETE CURB & GUTTER, TYPE B-6.24
18. CONCRETE MEDIAN SURFACE, 4 INCH
19. SUBBASE GRANULAR MATERIAL, TYPE B 6"
20. 4" HOT-MIX ASPHALT SURFACE COURSE, IL-9.5FG, N50
21. AGGREGATE BASE COURSE, TYPE A 6"
22. AGGREGATE SUBGRADE IMPROVEMENT, 18"
23. PORTLAND CEMENT CONCRETE SHOULDERS, 10 1/4"
24. SHOULDER RUMBLE STRIPS, 16 INCH
25. AGGREGATE SHOULDERS, TYPE A 4"
26. PORTLAND CEMENT CONCRETE SIDEWALK 4 INCH
27. CONCRETE CURB, TYPE B
28. PORTLAND CEMENT CONCRETE SIDEWALK 5 INCH
29. AGGREGATE BASE COURSE, TYPE B 4"
30. CONCRETE GUTTER, TYPE A

NOTES

1. SEE HOT-MIX ASPHALT MIXTURE REQUIREMENTS CHART FOR MIXTURE DESIGN.
2. FOR SUPERELEVATION TRANSITIONS, SEE MAINLINE DETAIL SHEETS.
3. SEE DRAINAGE PLANS FOR LOCATIONS OF PIPE UNDERDRAINS AND STRUCTURES.
4. SEE CROSS SECTIONS FOR SIDE SLOPE AND DITCH DETAILS.
5. SEE LANDSCAPING PLANS FOR SEEDING TYPES AND LOCATIONS.
6. SEE NOISE WALL PLANS FOR DETAILS.
7. PER HIGHWAY STANDARDS 421201 AND 420206, THE CONTRACTOR SHALL PAVE THE 4" STABILIZED SUBBASE AS SHOWN. ADDITIONAL WIDTH SHALL BE REMOVED AND REPLACED WITH CA6 OR CA8 STONE. REMOVAL OF ADDITIONAL WIDTH STABILIZED SUBBASE WILL NOT BE MEASURED FOR PAYMENT AND IS INCLUDED IN THE ITEM STABILIZED SUBBASE - HOT-MIX ASPHALT, 4".

MODEL: Pr Typ Sect-4 [Sheet]
FILE NAME: c:\pwworkir\benesch projects\projects\d0172845\D284C24-NL-sht-PrTypSect.dgn

benesch
Alfred Benesch & Company
35 W Wacker Drive, Suite 3200
Chicago, Illinois 60601
312-565-6450 Job No. 10800.00

USER NAME = agibson	DESIGNED - J.MAJCHER	REVISED -	
	DRAWN - J.MAJCHER	REVISED -	
PLOT SCALE = $SCALE$	CHECKED - A. GIBSON	REVISED -	
PLOT DATE = 2/6/2025	DATE - 02/14/2025	REVISED -	

STATE OF ILLINOIS
DEPARTMENT OF TRANSPORTATION

PROPOSED TYPICAL SECTIONS

SCALE: 1"=10' | SHEET 10 OF 10 SHEETS | STA. TO STA.

F.A.I RTE.	SECTION	COUNTY	TOTAL SHEETS	SHEET NO.
*	(201-3)R & (4-1.5)R	WINNEBAGO	1685	48
		CONTRACT NO. 64C24		
		ILLINOIS	FED. AID PROJECT	

* FAI ROUTE 39 (I-39) & FAP 301 (US 20)

LOCATION	EARTH EXCAVATION (20200100)	EARTH EXCAVATION ADJUSTED FOR SHRINKAGE (20%)	EMBANKMENT	EARTHWORK BALANCE WASTE (+) OR SHORTAGE (-)	FURNISHED EXCAVATION (SPECIAL) (FROM EXISTING STOCKPILE) (X2040805)	TOPSOIL EXCAVATION AND PLACEMENT (21101505)	REQUIRED TOPSOIL PLACEMENT	TOPSOIL BALANCE WASTE (+) OR SHORTAGE (-)
	CUBIC YARD	CUBIC YARD	CUBIC YARD	CUBIC YARD	CUBIC YARD	CUBIC YARD	CUBIC YARD	CUBIC YARD
I-39 Temporary Pavement Widening Prestage								
	2624.8	2099.9	3713.6	-1613.8				
SUB TOTAL	**2,624.8**	**2,099.9**	**3,713.6**	**-1,613.8**	**0.0**	**0.0**	**0.0**	
I-39 Stockpile								
					1610.0			
SUB TOTAL	**0.0**	**0.0**	**0.0**	**0.0**	**1,610.0**	**0.0**	**0.0**	
PRESTAGE TOTAL	**2,625.0**	**2,100.0**	**3,715.0**	**-1,610.0**	**1,610.0**	**0.0**	**0.0**	**0.0**
I-39 Stage 1/1B								
	43164.3	34531.4	113954.6	-79423.2		12432.8	8466.2	
SUB TOTAL	**43,164.3**	**34,531.4**	**113,954.6**	**-79,423.2**	**0.0**	**12,432.8**	**8,466.2**	
Ramp D Stage 1/1B								
	217.5	174.0	2730.6	-2556.6				
SUB TOTAL	**217.5**	**174.0**	**2,730.6**	**-2,556.6**	**0.0**	**0.0**	**0.0**	
Temporary Ramp D Stage 1/1B								
	163.0	130.4	2472.2	-2341.8				
SUB TOTAL	**163.0**	**130.4**	**2,472.2**	**-2,341.8**	**0.0**	**0.0**	**0.0**	
Cherry Valley Path Stage 1/1B								
	3284.3	2627.5		2627.5				
SUB TOTAL	**3,284.3**	**2,627.5**	**0.0**	**2,627.5**	**0.0**	**0.0**	**0.0**	
Removal of Temp Ramp D and Restoration of Pond								
	2472.2	1977.8	163.0	1814.8				
SUB TOTAL	**2,472.2**	**1,977.8**	**163.0**	**1,814.8**	**0.0**	**0.0**	**0.0**	
Fill over Cherry Valley Path Tunnel								
			136.1	-136.1				
SUB TOTAL	**0.0**	**0.0**	**136.1**	**-136.1**	**0.0**	**0.0**	**0.0**	
Fill over Madigan Creek Culvert								
			2093.3	-2093.3				
SUB TOTAL	**0.0**	**0.0**	**2,093.3**	**-2,093.3**	**0.0**	**0.0**	**0.0**	
I-39 Stockpile								
					82105.0			
SUB TOTAL	**0.0**	**0.0**	**0.0**	**0.0**	**82,105.0**	**0.0**	**0.0**	
STAGE 1/1B TOTAL	**49,305.0**	**39,445.0**	**121,550.0**	**-82,105.0**	**82,105.0**	**12,433.0**	**8,467.0**	**3,966.0**
I-39 Stage 2A/2B								
	19337.7	15470.2	19366.3	-3896.1		2973.7	618.1	
SUB TOTAL	**19,337.7**	**15,470.2**	**19,366.3**	**-3,896.1**	**0.0**	**2,973.7**	**618.1**	
Cherry Valley Path Stage 2/2B								
	3284.3	2627.5		2627.5				
SUB TOTAL	**3,284.3**	**2,627.5**	**0.0**	**2,627.5**	**0.0**	**0.0**	**0.0**	
Fill over Cherry Valley Path Tunnel								
			294.0	-294.0				
SUB TOTAL	**0.0**	**0.0**	**294.0**	**-294.0**	**0.0**	**0.0**	**0.0**	
Fill over Madigan Creek Culvert								
			1414.5	-1414.5				
SUB TOTAL	**0.0**	**0.0**	**1,414.5**	**-1,414.5**	**0.0**	**0.0**	**0.0**	
I-39 Stockpile								
					2975.0			
SUB TOTAL	**0.0**	**0.0**	**0.0**	**0.0**	**2,975.0**	**0.0**	**0.0**	
STAGE 2A/2B TOTAL	**22,625.0**	**18,100.0**	**21,075.0**	**-2,975.0**	**2,975.0**	**2,974.0**	**619.0**	**6,321.0**

MODEL: Schedules-01 [Sheet]
FILE NAME: c:\pwworld\benesch projects\projects\d0173723\D264C24-MI-sht-Schedules.dgn

benesch
Alfred Benesch & Company
35 W Wacker Drive, Suite 3200
Chicago, Illinois 60601
312-565-0450 Job No. 10800.00

USER NAME = agibson	DESIGNED - A. GIBSON	REVISED -	
	DRAWN - J.MAJCHER	REVISED -	
PLOT SCALE = $SCALE$	CHECKED - J.TARDY	REVISED -	
PLOT DATE = 2/6/2025	DATE - 02/27/24	REVISED -	

STATE OF ILLINOIS
DEPARTMENT OF TRANSPORTATION

SCHEDULE OF QUANTITIES

SCALE: 1"=1'-0" | SHEET 1 OF 39 SHEETS | STA. TO STA.

F.A.I RTE.	SECTION	COUNTY	TOTAL SHEETS	SHEET NO.
*	(201-3)R & (4-1.5)R	WINNEBAGO	1685	49
		CONTRACT NO. 64C24		
		ILLINOIS	FED. AID PROJECT	

* FAI ROUTE 39 (I-39) & FAP 301 (US 20)

LOCATION	EARTH EXCAVATION (20200100)	EARTH EXCAVATION ADJUSTED FOR SHRINKAGE (20%)	EMBANKMENT	EARTHWORK BALANCE WASTE (+) OR SHORTAGE (-)	FURNISHED EXCAVATION (SPECIAL) (FROM EXISTING STOCKPILE) (X2040805)	TOPSOIL EXCAVATION AND PLACEMENT (21101505)	REQUIRED TOPSOIL PLACEMENT	TOPSOIL BALANCE WASTE (+) OR SHORTAGE (-)
	CUBIC YARD	CUBIC YARD	CUBIC YARD	CUBIC YARD	CUBIC YARD	CUBIC YARD	CUBIC YARD	CUBIC YARD
I-39 Stage 3/3B								
	39210.4	31368.3	57306.6	-25938.3		9389.3	10151.4	
SUB TOTAL	**39,210.4**	**31,368.3**	**57,306.6**	**-25,938.3**	**0.0**	**9,389.3**	**10,151.4**	
I-39 NB Stage 3/3B								
	246.4	197.1	0.0	197.1				
SUB TOTAL	**246.4**	**197.1**	**0.0**	**197.1**	**0.0**	**0.0**	**0.0**	
Ramp B Stage 3/3B								
	3392.3	2713.8	1059.4	1654.4				
SUB TOTAL	**3,392.3**	**2,713.8**	**1,059.4**	**1,654.4**	**0.0**	**0.0**	**0.0**	
I-39 North Turnaround								
	125.2	100.2	458.0	-357.8				
SUB TOTAL	**125.2**	**100.2**	**458.0**	**-357.8**	**0.0**	**0.0**	**0.0**	
US 20/Harrison Ave Stage 3/3B								
	646.2	517.0	73.4	443.6		27.7	90.9	
SUB TOTAL	**646.2**	**517.0**	**73.4**	**443.6**	**0.0**	**27.7**	**90.9**	
Ramp AD Noisewall Stage 3/3B								
	3541.5	2833.2	990.1	1843.1		1704.5	1704.5	
SUB TOTAL	**3,541.5**	**2,833.2**	**990.1**	**1,843.1**	**0.0**	**1,704.5**	**1,704.5**	
Ramp DB Noisewall Stage 3/3B								
						2155.5	2155.5	
SUB TOTAL	**0.0**	**0.0**	**0.0**	**0.0**	**0.0**	**2,155.5**	**2,155.5**	
Cherry Valley Path Stage 3/3B								
	3284.3	2627.5		2627.5				
SUB TOTAL	**3,284.3**	**2,627.5**	**0.0**	**2,627.5**	**0.0**	**0.0**	**0.0**	
Fill over Cherry Valley Path Tunnel								
			96.4	-96.4				
SUB TOTAL	**0.0**	**0.0**	**96.4**	**-96.4**	**0.0**	**0.0**	**0.0**	
Fill over Madigan Creek Culvert								
			1819.5	-1819.5				
SUB TOTAL	**0.0**	**0.0**	**1,819.5**	**-1,819.5**	**0.0**	**0.0**	**0.0**	
I-39 Stockpile								
					21445.0	0.0	5237.4	
SUB TOTAL	**0.0**	**0.0**	**0.0**	**0.0**	**21,445.0**	**0.0**	**5,237.4**	
STAGE 3/3B TOTAL	**50,455.0**	**40,365.0**	**61,815.0**	**-21,445.0**	**21,445.0**	**13,278.0**	**19,340.0**	**259.0**
GRAND TOTAL	**125,010**	**100,010**	**208,155**	**-108,135**	**108,135**	**28,686**	**28,427**	**259**

NOTES:

1. PROPOSED TOPSOIL THICKNESS IS 4". EXISTING TOPSOIL THICKNESS IS ESTIMATED AT 4" AVERAGE. THERE IS AN ESTIMATED TOPSOIL SURPLUS OF 259 CUBIC YARDS. THE CONTRACTOR SHALL DISPOSE OF ALL SURPLUS TOPSOIL AT A LOCATION APPROVED BY THE ENGINEER. HAULING OF EXCESS MATERIAL, PLACEMENT, AND DISPOSAL OF SURPLUS TOPSOIL WILL NOT BE MEASURED SEPARATELY AND IS INCLUDED IN THE COST OF "TOPSOIL EXCAVATION AND PLACEMENT."

2. TOPSOIL STRIPPING/STOCKPILING/RESPREADING RELATED WORK WILL BE PAID FOR BY THE CUBIC YARD AS "TOPSOIL EXCAVATION AND PLACEMENT." THE QUANTITY MEASURED FOR PAYMENT IS BASED ON THE EXCAVATED TOPSOIL, NOT THE PLACED TOPSOIL. TOPSOIL MAY BE STOCKPILED IN THE EXISTING RAMP DA INFIELD OR IN THE STOCKPILE LOCATION (AS A SECONDARY LOCATION) THAT CONTAINS EMBANKMENT FOR THIS CONTRACT. EXISTING DRAINAGE PATTERNS SHALL BE MAINTAINED AT MAX SIDE SLOPES OF 1:3 OR AS APPROVED BY THE ENGINEER. IF THE SECONDARY LOCATION IS UTILIZED, THE SOIL TYPES SHALL NOT BE MIXED. THE EMBANKMENT MATERIAL AND TOPSOIL SHALL BE KEPT SEPARATE.

   SUBSEQUENT PLACEMENT OF EXCAVATION FROM TOPSOIL STOCKPILES WILL NOT BE MEASURED FOR PAYMENT BUT SHALL BE INCLUDED IN THE COST OF "TOPSOIL EXCAVATION AND PLACEMENT."

3. IT IS ANTICIPATED THAT DUE TO STAGING, THE CONTRACTOR MAY HANDLE EARTHWORK MATERIALS MORE THAN ONCE. MULTIPLE HANDLING (TEMPORARY STOCKPILES) OF ALL EARTHWORK RELATED MATERIALS IS INCLUDED IN THE WORK OF THE APPLICABLE PAY ITEM WITHIN THE CONTRACT AND WILL NOT BE PAID FOR SEPARATELY.

4. EARTHWORK MATERIALS LOCATED IN THE STOCKPILE SITE ARE AVAILABLE TO BE USED AS EMBANKMENT IN CONTRACT 64C24. A COLUMN IN THE ABOVE TABLE INDICATES WHERE THESE MATERIALS WILL BE USED TO FULFILL EARTHWORK REQUIREMENTS. THE EXCAVATION/HAULING/PLACING/COMPACTING OF EMBANKMENT MATERIAL EXTRACTED FROM THE STOCKPILE SITE AND PLACED WITHIN PROJECT EMBANKMENT AREAS WILL BE MEASURED IN CUBIC YARDS AT COMPACTED DENSITIES AND PAID FOR AS "FURNISHED EXCAVATION (SPECIAL)". SEE THE SPECIAL PROVISION FOR ADDITIONAL REQUIREMENTS. THE VOLUME NOTED IN THE COLUMN FOR "FURNISHED EXCAVATION (SPECIAL)" IS BASED ON THE COMPACTED DENSITY REQUIRED FOR THE ULTIMATE LINES AND GRADES OF THE CONTRACT PLANS.

5. THE PROJECT HAS SUFFICIENT VOLUME OF EARTH EXCAVATION TO MEET THE EMBANKMENT REQUIREMENTS IN EACH STAGE AND SUBSTAGE. THE PAY ITEM "FURNISHED EXCAVATION" IS NOT INCLUDED IN THIS CONTRACT. WHERE EMBANKMENT IS REQUIRED, THE STOCKPILE MATERIAL SHALL BE UTILIZED AND SHALL BE PAID FOR AS "FURNISHED EXCAVATION (SPECIAL)".

6. IF EARTHWORK MATERIAL IS BOTH UNSUITABLE AND CLASSIFIED AS 669.05(a)(1), IT SHALL BE PLACED WITHIN THE RIGHT-OF-WAY AS DIRECTED BY THE ENGINEER OR PLACED IN THE AREA OF THE STOCKPILE SITE DEPICTED ON THE GRADING PLAN STOCKPILE SHEET. IF PLACED IN THE AREA OF THE STOCKPILE SITE, THE SOIL TYPES SHALL NOT BE MIXED BEFORE BEING REUSED WITHIN THE RIGHT-OF-WAY. THE UNSUITABLE, CLASSIFIED AS 669.01(a)(1) MATERIAL SHALL BE KEPT SEPARATE.

7. GENERAL GUIDANCE ON ASSUMPTIONS FOR PAYMENT OF MATERIALS:
   - A. MATERIAL CLASSIFIED AS 669.05(a)(5) OR AS DIRECTED BY THE ENGINEER – REMOVED FROM THE PROJECT SITE AND PAID FOR AS NON-SPECIAL WASTE DISPOSAL
   - B. MATERIAL CLASSIFIED AS 669.05(a)(1), 669.05(a)(2), 669.05(a)(3), 669.05(b)(1), OR 669.05(c) – PLACED WITHIN THE IDOT RIGHT-OF-WAY
   - C. MATERIAL CLASSIFIED AS UNSUITABLE MATERIAL AND 669.05(a)(1), 669.05(a)(2), 669.05(a)(3), 669.05(b)(1), OR 669.05(c) – PAID FOR AS EARTH EXCAVATION AND NON-SPECIAL WASTE DISPOSAL
   - D. MATERIAL TAKEN FROM STOCKPILE SITE AND PLACED AND COMPACTED AS EMBANKMENT – PAID FOR AS FURNISHED EXCAVATION (SPECIAL)
   - E. UNLESS DIRECTED BY THE ENGINEER, MATERIAL CLASSIFIED AS EARTH EXCAVATION AND EARTH EXCAVATION (UNSUITABLE) SHALL REMAIN ON-SITE
   - F. IN LOCATIONS OF 18" SUBGRADE AGGREGATE - PAID FOR AS EARTH EXCAVATION

8. SOME SOILS LOCATED WITHIN THE I-39 MEDIAN AREA WHERE PROPOSED PAVEMENT/CONSTRUCTION WILL BE PLACED BELOW EXISTING GROUND MAY BE CLASSIFIED AS UNSUITABLE MATERIAL BY THE GEOTECHNICAL ENGINEER. ALL SUITABLE MATERIAL SHALL BE CLASSIFIED AS EARTH EXCAVATION.

EARTHWORK SUMMARY			
PAY ITEM NO.	DESCRIPTION	UNIT	QUANTITY
20200100	EARTH EXCAVATION	CU YD	125,010
21101505	TOPSOIL EXCAVATION AND PLACEMENT	CU YD	28,686
X2040805	FURNISHED EXCAVATION (SPECIAL)	CU YD	108,135

44000100						
PAVEMENT REMOVAL						
87% FED / 13% STATE						
ROAD	STA	STA	DESCRIPTION	SQ FT	SQ YD	REMARKS
EX I-39	2620+83.00	2647+61.43	NB PVMT	86,575	9,620	
EX I-39	2649+27.70	2683+87.81	NB PVMT	79,466	8,830	
EX I-39	2686+24.29	2723+42.47	NB PVMT	98,831	10,982	
EX I-39	2725+66.87	2732+09.83	NB PVMT	28,133	3,126	
EX I-39	2628+56.62	2639+32.72	NB/SB PVMT	13,106	1,457	
EX I-39	2620+83.00	2647+61.43	SB PVMT	128,380	14,265	
EX I-39	2649+27.70	2683+87.81	SB PVMT	124,477	13,831	
EX I-39	2686+24.29	2723+42.47	SB PVMT	114,078	12,676	
EX I-39	2725+66.87	2732+09.83	SB PVMT	20,124	2,236	
SUBTOTAL					77,023	
EX HARRISON AVE	151+35.23	1312+77.31	INSIDE EB PVMT	5,575	620	
EX HARRISON AVE	149+82.83	1313+81.65	OUTSIDE EB PVMT	11,467	1,275	
EX HARRISON AVE	151+34.27	1312+77.77	INSIDE WB PVMT	5,608	624	
SUBTOTAL					2,519	
CHERRY VALLEY PATH					1,043	
SUBTOTAL					1,043	
GRAND TOTAL					80,585	
NOTE: SQ FT AREAS MEASURED IN CADD.						

44000300					
CURB REMOVAL					
87% FED / 13% STATE					
ROAD	STA	STA	OFFSET	FOOT	REMARKS
CHERRY VALLEY PATH					
CHERRY VALLEY PATH				19	
SUBTOTAL				19	
GRAND TOTAL				19	

44004250						
PAVED SHOULDER REMOVAL						
87% FED / 13% STATE						
ROAD	STA	STA	DESCRIPTION	SQ FT	SQ YD	REMARKS
EX I-39	2625+84.06	2647+41.46	NB RT SHOULDER	25213	2802	
EX I-39	2628+87.92	2647+16.37	SB RT SHOULDER	20873	2320	
EX I-39	2636+33.90	2647+50.50	NB LT SHOULDER	5988	666	
EX I-39	2636+36.35	2647+25.44	SB LT SHOULDER	4728	526	
EX I-39	2649+55.28	2683+68.20	NB RT SHOULDER	38401	4267	
EX I-39	2649+47.16	2683+29.44	NB LT SHOULDER	16862	1874	
EX I-39	2649+25.09	2655+30.43	SB RT SHOULDER	8383	932	
EX I-39	2649+33.20	2682+63.14	SB LT SHOULDER	15694	1744	
EX I-39	2677+05.75	2682+23.46	SB RT SHOULDER	5899	656	
EX I-39	2686+83.17	2709+63.75	NB RT SHOULDER	25024	2781	
EX I-39	2686+44.30	2723+21.15	NB LT SHOULDER	24969	2775	
EX I-39	2685+39.62	2706+90.56	SB RT SHOULDER	24041	2672	
EX I-39	2685+78.41	2723+05.26	SB LT SHOULDER	28524	3170	
EX I-39	2709+10.92	2723+37.22	NB RT SHOULDER	15433	1715	
EX I-39	2709+92.38	2722+90.43	SB RT SHOULDER	15578	1731	
EX I-39	2726+00.96	2729+12.09	NB RT SHOULDER	3652	406	
EX I-39	2725+87.94	2732+09.80	NB LT SHOULDER	3506	390	
EX I-39	2725+60.06	2727+27.31	SB RT SHOULDER	2142	239	
EX I-39	2725+74.24	2731+45.79	SB LT SHOULDER	4250	473	
EX I-39	2727+82.25	2729+27.49	NB RT SHOULDER	1483	165	
EX I-39	2726+51.41	2731+47.11	SB RT SHOULDER	6072	675	
EX I-39	2738+89.70	2739+68.57	NB/SB TEMP PAVEMENT	2425	270	
GRAND TOTAL					33249	
NOTE:SQ FT AREAS MEASURED IN CADD.						

44000500									
COMBINATION CURB AND GUTTER REMOVAL									
87% FED / 13% STATE									
ROAD	STA	OFFSET	LT/RT	STA	OFFSET	LT/RT	DESCRIPTION	FT	REMARKS
CHERRY VALLEY PATH								82	
SUBTOTAL								82	
TOTAL								82	

MODEL: Schedules-3 [Sheet]
FILE NAME: c:\pwworking\benesch projects\projects\d0173723\D264C24-MI-sht-Schedules.dgn

benesch
Alfred Benesch & Company
35 W Wacker Drive, Suite 3200
Chicago, Illinois 60601
312-565-0450 Job No. 10800.00

USER NAME = agibson	DESIGNED - A. GIBSON	REVISED -	
	DRAWN - J.MAJCHER	REVISED -	
PLOT SCALE = 0.16666633 ' / in.	CHECKED - J.TARDY	REVISED -	
PLOT DATE = 2/6/2025	DATE - 02/27/24	REVISED -	

STATE OF ILLINOIS
DEPARTMENT OF TRANSPORTATION

SCHEDULE OF QUANTITIES

SCALE: 1"=1'-0" | SHEET 3 OF 39 SHEETS | STA. TO STA.

F.A.I RTE.	SECTION	COUNTY	TOTAL SHEETS	SHEET NO.
*	(201-3)R & (4-1.5)R	WINNEBAGO	1685	51
		CONTRACT NO. 64C24		
	ILLINOIS	FED. AID PROJECT		

* FAI ROUTE 39 (I-39) & FAP 301 (US 20)

44000600					
SIDEWALK REMOVAL					
87% FED / 13% STATE					
ROAD	STA	STA	OFFSET	SQ FT	REMARKS
CHERRY VALLEY PATH					
CHERRY VALLEY PATH				230	
			SUBTOTAL	230	
			GRAND TOTAL	230	

Z0004552						
APPROACH SLAB REMOVAL						
87% FED / 13% STATE						
ROAD	STA	STA	DESCRIPTION	SQ FT	SQ YD	REMARKS
EX I-39	2647+39.37	2647+74.33	NB APPROACH	791	88	
EX I-39	2649+25.81	2649+59.28	NB APPROACH	791	88	
EX I-39	2647+12.04	2647+47.79	SB APPROACH	812	91	
EX I-39	2649+00.87	2649+35.39	SB APPROACH	807	90	
EX I-39	2683+20.11	2684+04.79	NB APPROACH	791	88	
EX I-39	2686+16.31	2687+01.05	NB APPROACH	792	89	
EX I-39	2682+02.21	2682+91.42	SB APPROACH	822	92	
EX I-39	2685+02.87	2685+89.32	SB APPROACH	800	89	
EX I-39	2723+18.61	2723+60.50	NB APPROACH	1163	130	
EX I-39	2725+65.14	2726+03.79	NB APPROACH	1076	120	
EX I-39	2722+88.06	2723+28.84	SB APPROACH	1068	119	
EX I-39	2725+36.13	2725+76.26	SB APPROACH	1136	127	
GRAND TOTAL					1211	
NOTE: SQ FT AREAS MEASURED IN CADD.						

X6640104								
FENCE REMOVAL								
87% FED / 13% STATE								
ROAD	STA	OFFSET	LT/RT	STA	OFFSET	LT/RT	FOOT	REMARKS
EX I-39	2642+60.96	150.65	LT	2646+59.63	149.02	LT	388	
EX I-39	2645+39.08	145.63	RT	2647+81.03	148.45	RT	248	
EX I-39	2648+55.01	163.50	LT	2649+24.67	252.17	LT	111	
EX I-39	2651+16.31	150.53	RT	2662+09.62	149.97	RT	1122	
EX I-39	2656+40.97	149.13	LT	2662+02.76	150.83	LT	547	
EX I-39	2669+33.83	149.97	LT	2674+09.15	149.19	LT	476	
EX I-39	2687+49.50	105.79	LT	2688+07.64	148.86	RT	72	
EX I-39	2699+60.53	149.87	LT	2705+17.55	168.04	LT	560	
EX I-39	2698+89.54	147.60	RT	2704+89.09	148.44	RT	600	
EX I-39	2705+17.46	148.63	LT	2709+06.90	116.62	LT	399	
EX I-39	2705+81.86	149.74	RT	2708+01.31	115.27	RT	267	
RAMP AD	67+75.00	N/A	RT	67+75.00	N/A	RT	20	
RAMP DB	48+15.28	N/A	RT	48+15.28	N/A	RT	20	
RAMP DB	50+00.00	N/A	RT	50+00.00	N/A	RT	20	
GRAND TOTAL							4851	

MODEL: Schedules-4 [Sheet]
FILE NAME: c:\pwworkdir\benesch projects\projects\d0173723\D264C24-MI-sht-Schedules.dgn

benesch
Alfred Benesch & Company
35 W Wacker Drive, Suite 3300
Chicago, Illinois 60601
312-565-0450 Job No. 10800.00

USER NAME = agibson	DESIGNED - A. GIBSON	REVISED -	
	DRAWN - J.MAJCHER	REVISED -	
PLOT SCALE = 0.16666633 ' / in.	CHECKED - J.TARDY	REVISED -	
PLOT DATE = 2/6/2025	DATE - 02/27/24	REVISED -	

STATE OF ILLINOIS
DEPARTMENT OF TRANSPORTATION

SCHEDULE OF QUANTITIES

SCALE: 1"=1'-0" | SHEET 4 OF 39 SHEETS | STA. TO STA.

F.A.I RTE.	SECTION	COUNTY	TOTAL SHEETS	SHEET NO.
*	(201-3)R & (4-1.5)R	WINNEBAGO	1685	52
		CONTRACT NO. 64C24		
	ILLINOIS	FED. AID PROJECT		

* FAI ROUTE 39 (I-39) & FAP 301 (US 20)

63200310						
GUARDRAIL REMOVAL						
87% FED / 13% STATE						
ROAD	STA	LT/RT	STA	LT/RT	FOOT	REMARKS
EX I-39	2633+98.52	CENTER	2636+37.10	CENTER	483	
EX I-39	2639+78.01	RT	2647+61.94	RT	798	
EX I-39	2642+76.47	LT	2647+19.59	LT	438	
EX I-39	2644+00.90	RT	2647+46.86	RT	347	
EX I-39	2649+13.83	LT	2655+29.91	LT	610	
EX I-39	2649+27.92	LT	2652+48.10	LT	320	
EX I-39	2649+51.76	RT	2652+11.71	RT	263	
EX I-39	2670+70.95	CENTER	2673+32.94	CENTER	529	
EX I-39	2678+31.80	RT	2683+93.16	RT	560	
EX I-39	2679+81.05	RT	2683+28.26	RT	347	
EX I-39	2679+92.92	LT	2682+03.49	LT	225	
EX I-39	2685+15.35	LT	2688+75.14	LT	360	
EX I-39	2685+79.10	LT	2696+76.40	LT	1097	
EX I-39	2686+25.41	RT	2694+80.61	RT	849	
EX I-39	2686+94.96	RT	2688+68.20	RT	175	
EX I-39	2710+06.44	CENTER	2712+08.90	CENTER	409	
EX I-39	2719+82.46	RT	2723+28.39	RT	347	
EX I-39	2721+20.46	LT	2722+97.67	LT	176	
EX I-39	2722+52.89	RT	2723+48.88	RT	98	
EX I-39	2725+48.95	LT	2727+81.04	LT	235	
EX I-39	2725+45.74	LT	2728+69.84	LT	347	
EX I-39	2725+94.06	RT	2727+43.37	RT	151	
				GRAND TOTAL	9164	

X7060100				
REMOVE TEMPORARY IMPACT ATTENUATORS, STATE OWNED				
87% FED / 13% STATE				
ROAD	STA	LT/RT	EACH	REMARKS
RAMP D	410+79.79	LT/RT	1	
EX I-39	2732+02.07	LT/RT	1	
SUBTOTAL			2	
EX HARRISON AVE	152+30.43	LT/RT	1	
EX HARRISON AVE	1311+79.64	LT/RT	1	
		SUBTOTAL	2	
		GRAND TOTAL	4	

X6430120				
REMOVE IMPACT ATTENUATORS, NO SALVAGE				
87% FED / 13% STATE				
ROAD	STA	LT/RT	EACH	REMARKS
EX I-39	2620+93.58	LT/RT	1	
EX I-39	2634+00.61	LT/RT	1	
EX I-39	2636+43.74	LT/RT	1	
EX I-39	2664+29.14	LT/RT	1	
EX I-39	2665+38.65	LT/RT	1	
EX I-39	2666+15.10	LT/RT	1	
EX I-39	2673+37.57	LT/RT	1	
EX I-39	2709+09.14	LT/RT	1	
EX I-39	2712+16.39	LT/RT	1	
		GRAND TOTAL	9	

X6431110				
REMOVE ATTENUATOR BASE				
87% FED / 13% STATE				
ROAD	STA	LT/RT	EACH	REMARKS
EX I-39	2620+93.58	LT/RT	1	
EX I-39	2634+00.61	LT/RT	1	
EX I-39	2636+43.74	LT/RT	1	
EX I-39	2664+29.14	LT/RT	1	
EX I-39	2665+38.65	LT/RT	1	
EX I-39	2666+15.10	LT/RT	1	
EX I-39	2673+37.57	LT/RT	1	
EX I-39	2709+09.14	LT/RT	1	
EX I-39	2712+16.39	LT/RT	1	
		GRAND TOTAL	9	

X7040652						
REMOVE TEMPORARY CONCRETE BARRIER, STATE OWNED						
87% FED / 13% STATE						
ROAD	STA	LT/RT	STA	LT/RT	FOOT	REMARKS
RAMP D	414+97.44	RT	410+93.26	RT	413	
				GRAND TOTAL	413	

MODEL: Schedules-5 [Sheet]
FILE NAME: c:\pwworking\benesch projects\projects\d0173723\D264C24-MLs-sht-Schedules.dgn

benesch
Alfred Benesch & Company
35 W Wacker Drive, Suite 3200
Chicago, Illinois 60601
312-565-0450 Job No. 10800.00

USER NAME = agibson	DESIGNED - A. GIBSON	REVISED -	
	DRAWN - J.MAJCHER	REVISED -	
PLOT SCALE = 0.16666633 ' / in.	CHECKED - J.TARDY	REVISED -	
PLOT DATE = 2/6/2025	DATE - 02/27/24	REVISED -	

STATE OF ILLINOIS
DEPARTMENT OF TRANSPORTATION

SCHEDULE OF QUANTITIES

SCALE: 1"=1'-0" | SHEET 5 OF 39 SHEETS | STA. TO STA.

F.A.I RTE.	SECTION	COUNTY	TOTAL SHEETS	SHEET NO.
*	(201-3)R & (4-1.5)R	WINNEBAGO	1685	53
		CONTRACT NO. 64C24		
	ILLINOIS	FED. AID PROJECT		

* FAI ROUTE 39 (I-39) & FAP 301 (US 20)

30300112
AGGREGATE SUBGRADE IMPROVEMENT 12"
87% FED / 13% STATE

ROAD	STA	STA	DESCRIPTION	WIDTH (FT)	SQ FT	SQ YD	REMARKS
I-39							
PR I-39	2625+50.00	2646+61.61	SB OUTSIDE SHOULDER	12.5	26,067	2,896	
PR I-39	2625+50.00	2630+79.71	SB PAVEMENT	VAR 54.3-48	26,892	2,988	
PR I-39	2630+79.71	2645+61.46	SB PAVEMENT	48	70,672	7,852	
PR I-39	2646+61.61	2646+88.50	SB PAVEMENT CONNECTOR	VAR 70.5-71.1	1,859	207	
PR I-39	2625+50.00	2646+61.61	SB INSIDE SHOULDER	10	21,085	2,343	
PR I-39	2625+50.00	2647+03.39	MEDIAN BARRIER BASE	7	15,065	1,674	
PR I-39	2625+50.00	2646+91.74	NB INSIDE SHOULDER	10	21,449	2,383	
PR I-39	2625+50.00	2645+91.89	NB PAVEMENT	48	98,652	10,961	
PR I-39	2646+91.74	2647+18.05	NB PAVEMENT CONNECTOR	70.5	1,897	211	
PR I-39	2625+50.00	2646+91.74	NB OUTSIDE SHOULDER	12	27,100	3,011	
PR I-39	2649+62.01	2656+00.00	SB OUTSIDE SHOULDER	12.5	7,879	875	
PR I-39	2649+37.03	2649+62.01	SB PAVEMENT CONNECTOR	VAR 70.5-71.1	1,785	198	
PR I-39	2650+62.16	2656+00.00	SB PAVEMENT	48	25,647	2,850	
PR I-39	2649+62.01	2656+00.00	SB INSIDE SHOULDER	10	6,371	708	
PR I-39	2649+50.05	2656+00.00	MEDIAN BARRIER BASE	7	4,549	505	
PR I-39	2649+87.36	2656+00.00	NB INSIDE SHOULDER	10	6,134	682	
PR I-39	2649+62.89	2649+87.36	NB PAVEMENT CONNECTOR	70.5	1,713	190	
PR I-39	2650+87.21	2656+00.00	NB PAVEMENT	48	24,775	2,753	
PR I-39	2649+87.36	2656+00.00	NB OUTSIDE SHOULDER	12.5	7,750	861	
PR I-39	2663+50.00	2668+50.00	SB OUTSIDE SHOULDER	12.5	6,250	694	
PR I-39	2663+50.00	2668+50.00	SB PAVEMENT	48	24,000	2,667	
PR I-39	2663+50.00	2668+50.00	SB INSIDE SHOULDER	10	5,000	556	
PR I-39	2663+50.00	2668+50.00	MEDIAN BARRIER BASE	7	3,500	389	
PR I-39	2663+50.00	2668+50.00	NB INSIDE SHOULDER	10	5,000	556	
PR I-39	2663+50.00	2668+50.00	NB PAVEMENT	48	24,000	2,667	
PR I-39	2663+50.00	2668+50.00	NB OUTSIDE SHOULDER	12.5	6,250	694	
PR I-39	2674+50.00	2675+50.00	SB OUTSIDE SHOULDER	12.5	1,250	139	
PR I-39	2674+50.00	2675+50.00	SB PAVEMENT	48	4,800	533	
PR I-39	2674+50.00	2675+50.00	SB INSIDE SHOULDER	10	1,000	111	
PR I-39	2674+50.00	2675+50.00	MEDIAN BARRIER BASE	7	700	78	
PR I-39	2674+50.00	2675+50.00	NB INSIDE SHOULDER	10	1,000	111	
PR I-39	2674+50.00	2675+50.00	NB PAVEMENT	48	4,800	533	
PR I-39	2674+50.00	2675+50.00	NB OUTSIDE SHOULDER	12.5	1,250	139	
PR I-39	2679+50.00	2680+60.40	SB OUTSIDE SHOULDER	12.5	1,380	153	
PR I-39	2679+50.00	2679+60.40	SB PAVEMENT	48	499	55	
PR I-39	2680+60.40	2681+28.39	SB PAVEMENT CONNECTOR	VAR 70.5-71.0	4,680	520	
PR I-39	2679+50.00	2680+60.40	SB INSIDE SHOULDER	10	1,104	123	
PR I-39	2679+50.00	2681+89.81	MEDIAN BARRIER BASE	7	1,683	187	
PR I-39	2679+50.00	2681+81.21	NB INSIDE SHOULDER	10	2,312	257	
PR I-39	2679+50.00	2680+81.21	NB PAVEMENT	48	6,298	700	
PR I-39	2681+81.21	2682+52.48	NB PAVEMENT CONNECTOR	70.5	5,141	571	
PR I-39	2679+50.00	2681+81.21	NB OUTSIDE SHOULDER	12.5	2,890	321	
PR I-39	2686+30.85	2695+50.00	SB OUTSIDE SHOULDER	12.5	11,489	1,277	
PR I-39	2685+59.53	2686+30.85	SB PAVEMENT CONNECTOR	VAR 70.5-71.0	5,152	572	
PR I-39	2687+30.85	2695+50.00	SB PAVEMENT	48	39,319	4,369	
PR I-39	2686+30.85	2695+50.00	SB INSIDE SHOULDER	10	9,191	1,021	
PR I-39	2686+21.62	2695+50.00	MEDIAN BARRIER BASE	7	6,592	732	
PR I-39	2687+54.95	2695+50.00	NB INSIDE SHOULDER	10	7,951	883	
PR I-39	2686+83.67	2687+54.95	NB PAVEMENT CONNECTOR	VAR 70.5-71.0	4,911	546	
PR I-39	2688+54.95	2695+50.00	NB PAVEMENT	48	33,363	3,707	
PR I-39	2687+54.95	2695+50.00	NB OUTSIDE SHOULDER	12.5	9,938	1,104	
PR I-39	2705+00.00	2705+84.13	SB OUTSIDE SHOULDER	12.5	1,051	117	
PR I-39	2705+84.13	2709+83.92	SB OUTSIDE SHOULDER	VAR 12.5-6.5	3,499	389	
PR I-39	2709+84.24	2713+30.21	RAMP D GORE	VAR 4.0-17.9	2,839	315	
PR I-39	2713+30.21	2722+43.00	SB OUTSIDE SHOULDER	12.5	11,324	1,258	
PR I-39	2705+00.00	2705+84.13	SB PAVEMENT	48	4,036	448	
PR I-39	2705+84.13	2709+84.24	SB PAVEMENT	VAR 48-56	20,806	2,312	
PR I-39	2709+84.24	2721+42.91	SB PAVEMENT	36	41,589	4,621	

30300112
AGGREGATE SUBGRADE IMPROVEMENT 12"
87% FED / 13% STATE

ROAD	STA	STA	DESCRIPTION	WIDTH (FT)	SQ FT	SQ YD	REMARKS
I-39							
PR I-39	2722+43.11	2722+67.78	SB PAVEMENT CONNECTOR	VAR 58.5-59.1	1,421	158	
PR I-39	2705+00.00	2722+43.11	SB INSIDE SHOULDER	10	17,419	1,935	
PR I-39	2705+00.00	2722+80.61	MEDIAN BARRIER BASE	7	12,560	1,396	
PR I-39	2705+00.00	2722+68.87	NB INSIDE SHOULDER	10	17,699	1,967	
PR I-39	2705+00.00	2710+21.51	NB PAVEMENT	VAR 51.0-54.3	27,435	3,048	
PR I-39	2710+21.51	2721+69.07	NB PAVEMENT	24	27,610	3,068	
PR I-39	2722+68.87	2722+90.91	NB PAVEMENT CONNECTOR	46.5	1,045	116	
PR I-39	2705+00.00	2710+21.51	NB OUTSIDE SHOULDER	12	6,515	724	
PR I-39	2710+21.51	2715+79.83	RAMP B GORE	VAR 6.3-23.9	5,925	658	
PR I-39	2715+79.83	2722+68.87	NB OUTSIDE SHOULDER	12.5	8,669	963	
PR I-39	2725+95.56	2732+35.00	SB OUTSIDE SHOULDER	12.5	7,927	881	
PR I-39	2725+72.43	2725+95.56	SB PAVEMENT CONNECTOR	58.5	1,367	152	
PR I-39	2726+95.71	2732+35.00	SB PAVEMENT	36	19,326	2,147	
PR I-39	2725+95.56	2732+35.00	SB INSIDE SHOULDER	10	6,689	743	
PR I-39	2725+83.65	2731+98.37	MEDIAN BARRIER BASE	7	4,304	478	
PR I-39	2726+13.42	2731+98.37	NB INSIDE SHOULDER	10	5,854	650	
PR I-39	2725+92.66	2726+13.42	NB PAVEMENT CONNECTOR	46.5	952	106	
PR I-39	2727+13.26	2731+98.37	NB PAVEMENT	24	11,671	1,297	
PR I-39	2726+13.42	2731+98.37	NB OUTSIDE SHOULDER	12.5	7,345	816	
PR RAMP B	210+25.54	217+13.88	RAMP B PAVEMENT	24	16,606	1,845	
PR RAMP B	215+80.52	217+13.88	RAMP B INSIDE SHOULDER	6.5	895	99	
PR RAMP B	210+25.54	217+13.88	RAMP B OUTSIDE SHOULDER	VAR 12.5-10.5	8,164	907	
PR RAMP D	412+00.00	413+30.36	RAMP D PAVEMENT	16	2,086	232	
PR RAMP D	412+00.00	413+30.36	RAMP D OUTSIDE SHOULDER	6.5	847	94	
SUBTOTAL						105,057	
HARRISON							
PR DDI EB	3010+47.50	3013+80.10	EB PAVEMENT AND INSIDE C&G	19.08	6,423	714	
PR DDI WB	2010+39.50	2013+73.50	WB PAVEMENT AND INSIDE C&G	19.08	6,459	718	
PR HARRISON	149+83.16	1313+81.41	EB OUTSIDE C&G	3.08	1,826	203	
SUBTOTAL						1,635	
GRAND TOTAL						106,692	
NOTE: AREAS MEASURED IN CADD.							

MODEL: Schedules-6 [Sheet]
FILE NAME: c:\pwworkdir\benesch projects\projects\d0173723\D264C24-MI-sht-Schedules.dgn

benesch
Alfred Benesch & Company
35 W Wacker Drive, Suite 3200
Chicago, Illinois 60601
312-565-0450 Job No. 10800.00

USER NAME = agibson	DESIGNED - A. GIBSON	REVISED -	
	DRAWN - J.MAJCHER	REVISED -	
PLOT SCALE = 0.16666633 ' / in.	CHECKED - J.TARDY	REVISED -	
PLOT DATE = 2/6/2025	DATE - 02/27/24	REVISED -	

STATE OF ILLINOIS
DEPARTMENT OF TRANSPORTATION

SCHEDULE OF QUANTITIES

SCALE: 1"=1'-0" | SHEET 6 OF 39 SHEETS | STA. TO STA.

F.A.I RTE.	SECTION	COUNTY	TOTAL SHEETS	SHEET NO.
*	(201-3)R & (4-1.5)R	WINNEBAGO	1685	54
		CONTRACT NO. 64C24		
	ILLINOIS	FED. AID PROJECT		

* FAI ROUTE 39 (I-39) & FAP 301 (US 20) •

30300118
AGGREGATE SUBGRADE IMPROVEMENT 18"
87% FED / 13% STATE

ROAD	STA	STA	DESCRIPTION	WIDTH (FT)	SQ FT	SQ YD	REMARKS
I-39							
PR I-39	2620+83.00	2625+50.00	SB OUTSIDE SHOULDER	12.5	5,773	641	
PR I-39	2620+83.00	2625+50.00	SB PAVEMENT	VAR 60-54.3	26,528	2,948	
PR I-39	2620+83.00	2625+50.00	SB INSIDE SHOULDER	10	4,664	518	
PR I-39	2620+83.00	2625+50.00	MEDIAN BARRIER BASE	7	3,269	363	
PR I-39	2620+83.00	2625+50.00	NB INSIDE SHOULDER	10	4,676	520	
PR I-39	2620+83.00	2625+50.00	NB PAVEMENT	48	22,541	2,505	
PR I-39	2620+83.00	2625+50.00	NB OUTSIDE SHOULDER	12.5	5,896	655	
PR I-39	2656+00.00	2663+50.00	SB OUTSIDE SHOULDER	12.5	9,290	1,032	
PR I-39	2656+00.00	2663+50.00	SB PAVEMENT	48	35,819	3,980	
PR I-39	2656+00.00	2663+50.00	SB INSIDE SHOULDER	10	7,491	832	
PR I-39	2656+00.00	2663+50.00	MEDIAN BARRIER BASE	7	5,250	583	
PR I-39	2656+00.00	2663+50.00	NB INSIDE SHOULDER	10	7,509	834	
PR I-39	2656+00.00	2663+50.00	NB PAVEMENT	48	36,181	4,020	
PR I-39	2656+00.00	2663+50.00	NB OUTSIDE SHOULDER	12.5	9,460	1,051	
PR I-39	2668+50.00	2674+50.00	SB OUTSIDE SHOULDER	12.5	7,500	833	
PR I-39	2668+50.00	2674+50.00	SB PAVEMENT	48	28,800	3,200	
PR I-39	2668+50.00	2674+50.00	SB INSIDE SHOULDER	10	6,000	667	
PR I-39	2668+50.00	2674+50.00	MEDIAN BARRIER BASE	7	4,200	467	
PR I-39	2668+50.00	2674+50.00	NB INSIDE SHOULDER	10	6,000	667	
PR I-39	2668+50.00	2674+50.00	NB PAVEMENT	48	28,800	3,200	
PR I-39	2668+50.00	2674+50.00	NB OUTSIDE SHOULDER	12.5	7,500	833	
PR I-39	2675+50.00	2679+50.00	SB OUTSIDE SHOULDER	12.5	5,000	556	
PR I-39	2675+50.00	2679+50.00	SB PAVEMENT	48	19,200	2,133	
PR I-39	2675+50.00	2679+50.00	SB INSIDE SHOULDER	10	4,000	444	
PR I-39	2675+50.00	2679+50.00	MEDIAN BARRIER BASE	7	2,800	311	
PR I-39	2675+50.00	2679+50.00	NB INSIDE SHOULDER	10	4,000	444	
PR I-39	2675+50.00	2679+50.00	NB PAVEMENT	48	19,200	2,133	
PR I-39	2675+50.00	2679+50.00	NB OUTSIDE SHOULDER	12.5	5,000	556	
PR I-39	2695+50.00	2705+00.00	SB OUTSIDE SHOULDER	12.5	11,875	1,319	
PR I-39	2695+50.00	2705+00.00	SB PAVEMENT	48	45,600	5,067	
PR I-39	2695+50.00	2705+00.00	SB INSIDE SHOULDER	10	9,500	1,056	
PR I-39	2695+50.00	2705+00.00	MEDIAN BARRIER BASE	7	6,650	739	
PR I-39	2695+50.00	2705+00.00	NB INSIDE SHOULDER	10	9,500	1,056	
PR I-39	2695+50.00	2699+95.71	NB PAVEMENT	48	21,394	2,377	
PR I-39	2699+95.71	2705+00.00	NB PAVEMENT	VAR 48-51	24,972	2,775	
PR I-39	2695+50.00	2705+00.00	NB OUTSIDE SHOULDER	12.5	11,875	1,319	
					SUBTOTAL	52,635	
					GRAND TOTAL	52,635	

NOTE: AREAS MEASURED IN CADD.

31200500
STABILIZED SUBBASE - HOT-MIX ASPHALT, 4"
87% FED / 13% STATE

ROAD	STA	STA	DESCRIPTION	WIDTH (FT)	SQ FT	SQ YD	REMARKS
I-39							
PR I-39	2620+83.00	2630+79.71	SB PAVEMENT	VAR 51-63	56,390	6,266	
PR I-39	2630+79.71	2645+56.43	SB PAVEMENT	51	74,834	8,315	
PR I-39	2646+61.61	2646+86.52	SB PAVEMENT CONNECTOR	51	1,368	152	
PR I-39	2620+83.00	2645+86.92	NB PAVEMENT	51	128,536	14,282	
PR I-39	2646+91.73	2647+18.15	NB PAVEMENT CONNECTOR	51	1,346	150	
PR I-39	2649+35.29	2649+62.03	SB PAVEMENT CONNECTOR	51	1,261	140	
PR I-39	2650+67.18	2679+55.40	SB PAVEMENT	51	146,929	16,325	
PR I-39	2680+60.40	2681+20.17	SB PAVEMENT CONNECTOR	61.5	3,488	388	
PR I-39	2649+64.57	2649+87.34	NB PAVEMENT CONNECTOR	51	1,261	140	
PR I-39	2650+92.18	2680+76.20	NB PAVEMENT	51	152,547	16,950	
PR I-39	2681+81.21	2682+60.70	NB PAVEMENT CONNECTOR	51	3,614	402	
PR I-39	2685+51.36	2686+30.85	SB PAVEMENT CONNECTOR	51	3,614	402	
PR I-39	2687+35.85	2705+84.10	SB PAVEMENT	51	94,260	10,473	
PR I-39	2705+84.10	2709+84.24	SB PAVEMENT	VAR 51-59	22,010	2,446	
PR I-39	2709+84.24	2721+37.89	SB PAVEMENT	39	44,860	4,984	
PR I-39	2722+43.04	2722+65.75	SB PAVEMENT CONNECTOR	39	964	107	
PR I-39	2686+91.89	2687+54.95	NB PAVEMENT CONNECTOR	51	3,656	406	
PR I-39	2688+59.95	2699+95.71	NB PAVEMENT	51	57,924	6,436	
PR I-39	2699+95.71	2710+21.51	NB PAVEMENT	VAR 51-57.3	55,486	6,165	
PR I-39	2710+21.51	2721+64.09	NB PAVEMENT	27	30,927	3,436	
PR I-39	2722+68.93	2722+92.90	NB PAVEMENT CONNECTOR	27	593	66	
PR I-39	2725+70.65	2725+95.58	SB PAVEMENT CONNECTOR	39	894	99	
PR I-39	2727+00.73	2732+35.00	SB PAVEMENT	39	20,741	2,305	
PR I-39	2725+95.32	2726+13.41	NB PAVEMENT CONNECTOR	27	565	63	
PR I-39	2727+18.24	2731+97.70	NB PAVEMENT	27	12,995	1,444	
PR RAMP B	210+25.54	217+13.88	RAMP B PAVEMENT	27	18,682	2,076	
PR RAMP D	412+00.00	413+30.36	RAMP D PAVEMENT	19	2,477	275	
			SUBTOTAL			104,692	
HARRISON							
PR DDI EB	3010+47.50	3013+80.10	EB PAVEMENT AND INSIDE C&G	18.08	6,085	676	
PR DDI WB	2010+39.50	2013+73.50	WB PAVEMENT AND INSIDE C&G	18.08	6,120	680	
PR HARRISON	149+83.16	1313+81.41	EB OUTSIDE C&G	3.08	1,826	203	
			SUBTOTAL			1,559	
			GRAND TOTAL			106,251	

NOTE: AREAS MEASURED IN CADD.

MODEL: Schedules-7 [Sheet]
FILE NAME: c:\pwworld\benesch projects\projects\d0173723\D284C24-Mlt-sht-Schedules.dgn

benesch
Alfred Benesch & Company
35 W Wacker Drive, Suite 3300
Chicago, Illinois 60601
312-565-0450 Job No. 10890.00

USER NAME = agibson	DESIGNED - A. GIBSON	REVISED -	
	DRAWN - J.MAJCHER	REVISED -	
PLOT SCALE = 0.16666633 ' / in.	CHECKED - J.TARDY	REVISED -	
PLOT DATE = 2/6/2025	DATE - 02/27/24	REVISED -	

STATE OF ILLINOIS
DEPARTMENT OF TRANSPORTATION

SCHEDULE OF QUANTITIES

SCALE: 1"=1'-0" | SHEET 7 OF 39 SHEETS | STA. TO STA.

F.A.I RTE.	SECTION	COUNTY	TOTAL SHEETS	SHEET NO.
*	(201-3)R & (4-1.5)R	WINNEBAGO	1685	55
		CONTRACT NO. 64C24		
	ILLINOIS	FED. AID PROJECT		

* FAI ROUTE 39 (I-39) & FAP 301 (US 20)

31101400
SUBBASE GRANULAR MATERIAL, TYPE B 6"

87% FED / 13% STATE

ROAD	STA	STA	DESCRIPTION	OFFSET	AREA (SF)	AREA (SY)	REMARKS
HARRISON AVE							
HARRISON	151+34.77	153+08.66	MEDIAN	CT	1382	154	
HARRISON	1311+13.21	1312+77.80	MEDIAN	CT	1245	139	
					SUBTOTAL	293	
					GRAND TOTAL	293	

35100500
AGGREGATE BASE COURSE, TYPE A 6"

87% FED / 13% STATE

ROAD	STA	STA	LENGTH	WIDTH	SQ FT	SQ YD	REMARKS
HARRISON							
PR HARRISON	150+93.85	1312+83.48	381	10	3,812	424	
					SUBTOTAL	424	
CHERRY VALLEY PATH							
CHERRY VALLEY PATH						509	
					SUBTOTAL	509	
					GRAND TOTAL	933	

NOTE: AREAS MEASURED IN CADD.

40600275
BITUMINOUS MATERIALS (PRIME COAT)

87% FED / 13% STATE

DESCRIPTION	SQ FT	RATE (LB/SF)	APPLICATIONS	TOTAL (LBS)
REFER TO SCHEDULE FOR 31200500 STABILIZED - HOT-MIX ASPHALT 4"				
I-39 AND RAMPS	942220	0.25	1	235555.00
HARRISON	14031	0.25	1	3507.75
REFER TO SCHEDULE FOR 40603415 HOT-MIX ASPHALT SURFACE COURSE, IL-9.5FG, N50				
BIKE PATH	3812	0.25	1	952.95
CHERRY VALLEY PATH				
CHERRY VALLEY PATH				901.00
			SUBTOTAL	240917
			GRAND TOTAL	240917

40600290
BITUMINOUS MATERIALS (TACK COAT)

87% FED / 13% STATE

DESCRIPTION	SQ FT	RATE (LB/SF)	APPLICATIONS	TOTAL (LBS)
REFER TO SCHEDULE FOR 31200500 STABILIZED - HOT-MIX ASPHALT 4"				
I-39 AND RAMPS	942220	0.025	1	23555.5
HARRISON	14031	0.025	1	350.8
REFER TO SCHEDULE FOR X4062952 HOT-MIX ASPHALT STABILIZATION 6" AT STEEL PLATE BEAM GUARD RAIL				
I-39	26280	0.025	1	657
REFER TO SCHEDULE FOR 40603415 HOT-MIX ASPHALT SURFACE COURSE, IL-9.5FG, N50				
BIKE PATH	3812	0.025	1	95.3
			SUBTOTAL	24660
			GRAND TOTAL	24660

NOTE: SEE SN 101-1360 BILL OF MATERIALS FOR ADDITIONAL QUANTITY

40603415
HOT-MIX ASPHALT SURFACE COURSE, IL-9.5FG, N50

87% FED / 13% STATE

ROAD	STA	STA	SQ YD	UNIT WT (LBS/SY-IN)	THICKNESS (IN)	TON	REMARKS
HARRISON							
PR HARRISON	150+93.85	1312+83.48	424	112	4	95	
CHERRY VALLEY PATH							
CHERRY VALLEY PATH						30	
					SUBTOTAL	125	
					GRAND TOTAL	125	

NOTE: AREAS MEASURED IN CADD.

42000060
WELDED WIRE REINFORCEMENT

87% FED / 13% STATE

ROAD	STA	STA	DESCRIPTION	WIDTH (FT)	SQ FT	SQ YD	REMARKS
I-39							
PR I-39	2646+61.61	2646+91.85	SB PAVEMENT	48	1,442	160	
PR I-39	2646+91.73	2647+21.15	NB PAVEMENT	48	1,421	158	
PR I-39	2649+33.92	2649+62.01	SB PAVEMENT	48	1,340	149	
PR I-39	2649+59.65	2649+87.36	NB PAVEMENT	48	1,339	149	
PR I-39	2680+60.40	2681+34.57	SB PAVEMENT	48	3,560	396	
PR I-39	2681+81.21	2682+57.84	NB PAVEMENT	48	3,679	409	
PR I-39	2685+54.22	2686+30.85	SB PAVEMENT	48	3,679	409	
PR I-39	2686+77.49	2687+54.95	NB PAVEMENT	48	3,718	413	
PR I-39	2722+43.05	2722+71.13	SB PAVEMENT	36	1,006	112	
PR I-39	2722+68.91	2722+92.89	NB PAVEMENT	24	605	67	
PR I-39	2725+69.32	2725+95.56	SB PAVEMENT	36	940	104	
PR I-39	2725+88.58	2726+13.42	NB PAVEMENT	24	578	64	
					SUBTOTAL	2,590	
					GRAND TOTAL	2,590	

NOTE: AREAS MEASURED IN CADD.

42000080
PAVEMENT CONNECTOR (PCC) FOR BRIDGE APPROACH SLAB

87% FED / 13% STATE

ROAD	STA	STA	DESCRIPTION	WIDTH (FT)	SQ FT	SQ YD	REMARKS
I-39							
PR I-39	2646+61.61	2646+91.85	SB PAVEMENT CONNECTOR	VAR 70.0-70.6	2,082	231	
PR I-39	2646+91.73	2647+21.15	NB PAVEMENT CONNECTOR	70	2,100	233	
PR I-39	2649+33.92	2649+62.01	SB PAVEMENT CONNECTOR	VAR 70.0-70.6	1,991	221	
PR I-39	2649+59.65	2649+87.36	NB PAVEMENT CONNECTOR	70	1,928	214	
PR I-39	2680+60.40	2681+34.57	SB PAVEMENT CONNECTOR	VAR 70.0-70.5	5,082	565	
PR I-39	2681+81.21	2682+57.84	NB PAVEMENT CONNECTOR	70	5,480	609	
PR I-39	2685+54.22	2686+30.85	SB PAVEMENT CONNECTOR	VAR 70.0-70.5	5,493	610	
PR I-39	2686+77.49	2687+54.95	NB PAVEMENT CONNECTOR	VAR 70.0-70.5	5,313	590	
PR I-39	2722+43.05	2722+71.13	SB PAVEMENT CONNECTOR	VAR 58-58.6	1,604	178	
PR I-39	2722+68.91	2722+92.89	NB PAVEMENT CONNECTOR	46	1,178	131	
PR I-39	2725+69.32	2725+95.56	SB PAVEMENT CONNECTOR	58	1,535	171	
PR I-39	2725+88.58	2726+13.42	NB PAVEMENT CONNECTOR	46	1,092	121	
					SUBTOTAL	3,876	
					GRAND TOTAL	3,876	

NOTE: AREAS MEASURED IN CADD.

MODEL: Schedules-8 [Sheet]
FILE NAME: c:\pwworkdir\benesch projects\projects\d0173723\D264C24-NL-sht-Schedules.dgn

benesch
Alfred Benesch & Company
35 W Wacker Drive, Suite 3200
Chicago, Illinois 60601
312-565-0450 Job No. 10800.00

USER NAME = agibson	DESIGNED - A. GIBSON	REVISED -	
	DRAWN - J.MAJCHER	REVISED -	
PLOT SCALE = 0.16666633 ' / in.	CHECKED - J.TARDY	REVISED -	
PLOT DATE = 2/6/2025	DATE - 02/27/24	REVISED -	

STATE OF ILLINOIS
DEPARTMENT OF TRANSPORTATION

SCHEDULE OF QUANTITIES

SCALE: 1"=1'-0" | SHEET 8 OF 39 SHEETS | STA. TO STA.

F.A.I RTE.	SECTION	COUNTY	TOTAL SHEETS	SHEET NO.
*	(201-3)R & (4-1.5)R	WINNEBAGO	1685	56

CONTRACT NO. 64C24

ILLINOIS | FED. AID PROJECT

* FAI ROUTE 39 (I-39) & FAP 301 (US 20)

42001300
PROTECTIVE COAT
87% FED / 13% STATE

ROAD	STA	STA	DESCRIPTION	WIDTH (FT)	SQ FT	SQ YD	REMARKS
I-39							
PR RAMP B	210+25.54	217+13.88	RAMP B PAVEMENT	24	16,606	1,845	
PR RAMP D	412+00.00	413+30.36	RAMP D PAVEMENT	16	2,086	232	
PR RAMP B	215+80.52	217+13.88	RAMP B INSIDE SHOULDER	6	826	92	
PR RAMP B	210+25.54	217+13.88	RAMP B OUTSIDE SHOULDER	VAR 10-12	7,822	869	
PR RAMP D	412+00.00	413+30.36	RAMP D OUTSIDE SHOULDER	6	782	87	
PR I-39	2620+83.00	2630+79.71	SB PAVEMENT	VAR 48-60	53,421	5,936	
PR I-39	2620+83.00	2645+91.89	NB PAVEMENT	48	121,215	13,468	
PR I-39	2630+79.71	2645+61.46	SB PAVEMENT	60	70,672	7,852	
PR I-39	2650+62.16	2679+60.40	SB PAVEMENT	48	138,766	15,418	
PR I-39	2650+87.21	2680+81.21	NB PAVEMENT	48	144,053	16,006	
PR I-39	2687+30.85	2705+84.10	SB PAVEMENT	48	88,955	9,884	
PR I-39	2688+54.95	2699+95.71	NB PAVEMENT	48	54,757	6,084	
PR I-39	2699+95.71	2710+21.51	NB PAVEMENT	VAR 48-54.3	52,407	5,823	
PR I-39	2705+84.10	2709+84.24	SB PAVEMENT	VAR 48-56	20,805	2,312	
PR I-39	2709+84.24	2721+42.91	SB PAVEMENT	36	41,589	4,621	
PR I-39	2710+21.51	2721+69.07	NB PAVEMENT	24	27,610	3,068	
PR I-39	2726+95.71	2732+35.00	SB PAVEMENT	36	19,326	2,147	
PR I-39	2727+13.26	2731+97.70	NB PAVEMENT	24	11,671	1,297	
PR I-39	2646+61.61	2646+91.85	SB PAVEMENT CONNECTOR	VAR 70.0-70.6	2,082	231	
PR I-39	2646+91.73	2647+21.15	NB PAVEMENT CONNECTOR	70	2,100	233	
PR I-39	2649+33.92	2649+62.01	SB PAVEMENT CONNECTOR	VAR 70.0-70.6	1,991	221	
PR I-39	2649+59.65	2649+87.36	NB PAVEMENT CONNECTOR	70	1,928	214	
PR I-39	2680+60.40	2681+34.57	SB PAVEMENT CONNECTOR	VAR 70.0-70.5	5,082	565	
PR I-39	2681+81.21	2682+57.84	NB PAVEMENT CONNECTOR	70	5,480	609	
PR I-39	2685+54.22	2686+30.85	SB PAVEMENT CONNECTOR	VAR 70.0-70.5	5,493	610	
PR I-39	2686+77.49	2687+54.95	NB PAVEMENT CONNECTOR	VAR 70.0-70.5	5,313	590	
PR I-39	2722+43.05	2722+71.13	SB PAVEMENT CONNECTOR	VAR 58-58.6	1,604	178	
PR I-39	2722+68.91	2722+92.89	NB PAVEMENT CONNECTOR	46	1,178	131	
PR I-39	2725+69.32	2725+95.56	SB PAVEMENT CONNECTOR	58	1,535	171	
PR I-39	2725+88.58	2726+13.42	NB PAVEMENT CONNECTOR	46	1,092	121	
PR I-39	2645+61.46	2646+61.61	SB TERMINAL SYSTEM	48	4,776	531	
PR I-39	2645+91.89	2646+91.73	NB TERMINAL SYSTEM	48	4,824	536	
PR I-39	2649+62.01	2650+62.16	SB TERMINAL SYSTEM	48	4,776	531	
PR I-39	2649+87.36	2650+87.21	NB TERMINAL SYSTEM	48	4,824	536	
PR I-39	2679+60.40	2680+60.40	SB TERMINAL SYSTEM	48	4,800	533	
PR I-39	2680+81.21	2681+81.21	NB TERMINAL SYSTEM	48	4,800	533	
PR I-39	2686+30.85	2687+30.85	SB TERMINAL SYSTEM	48	4,800	533	
PR I-39	2687+54.95	2688+54.95	NB TERMINAL SYSTEM	48	4,800	533	
PR I-39	2721+42.91	2722+43.05	SB TERMINAL SYSTEM	36	3,589	399	
PR I-39	2721+69.07	2722+68.91	NB TERMINAL SYSTEM	24	2,405	267	
PR I-39	2725+95.56	2726+95.71	SB TERMINAL SYSTEM	36	3,589	399	
PR I-39	2726+13.42	2727+13.26	NB TERMINAL SYSTEM	24	2,405	267	
PR I-39	2620+83.00	2646+61.61	SB INSIDE SHOULDER	10	25,749	2,861	
PR I-39	2620+83.00	2646+61.61	SB OUTSIDE SHOULDER	12	30,566	3,396	
PR I-39	2620+83.00	2646+91.73	NB INSIDE SHOULDER	10	26,125	2,903	
PR I-39	2620+83.00	2646+91.73	NB OUTSIDE SHOULDER	12	31,675	3,519	
PR I-39	2649+62.01	2665+57.93	SB INSIDE SHOULDER	10	15,877	1,764	
PR I-39	2649+62.01	2680+60.40	SB OUTSIDE SHOULDER	12	37,008	4,112	
PR I-39	2649+87.36	2665+57.93	NB INSIDE SHOULDER	10	15,657	1,740	
PR I-39	2649+87.36	2681+81.21	NB OUTSIDE SHOULDER	12	38,495	4,277	
PR I-39	2665+57.93	2666+19.93	SB INSIDE SHOULDER	12	900	100	
PR I-39	2665+57.93	2666+19.93	NB INSIDE SHOULDER	12	900	100	
PR I-39	2666+19.93	2680+60.40	SB INSIDE SHOULDER	10	14,340	1,593	
PR I-39	2666+19.93	2681+81.21	NB INSIDE SHOULDER	10	15,548	1,728	
PR I-39	2686+30.85	2722+43.05	SB INSIDE SHOULDER	10	36,112	4,012	
PR I-39	2686+30.85	2705+84.10	SB OUTSIDE SHOULDER	12	23,439	2,604	
PR I-39	2687+54.95	2722+68.91	NB INSIDE SHOULDER	10	35,150	3,906	
PR I-39	2687+54.95	2710+21.51	NB OUTSIDE SHOULDER	12	27,195	3,022	
PR I-39	2705+84.10	2709+84.24	SB OUTSIDE SHOULDER	VAR 6-12	3,299	367	
PR I-39	2709+84.24	2711+14.57	RAMP D GORE	VAR 4-17.9	2,839	315	
PR I-39	2710+21.51	2715+79.83	RAMP B GORE	VAR 6.3-23.9	5,925	658	
PR I-39	2711+14.57	2722+43.05	SB OUTSIDE SHOULDER	12	10,871	1,208	
PR I-39	2715+79.83	2722+68.91	NB OUTSIDE SHOULDER	12	8,322	925	
PR I-39	2725+95.56	2732+35.00	SB INSIDE SHOULDER	10	6,671	741	
PR I-39	2725+95.56	2732+35.00	SB OUTSIDE SHOULDER	12	7,609	845	
PR I-39	2726+13.42	2731+97.70	NB INSIDE SHOULDER	10	5,854	650	
PR I-39	2726+13.42	2731+97.70	NB OUTSIDE SHOULDER	12	7,049	783	
PR I-39	2620+83.00	2630+74.38	MEDIAN CONCRETE BARRIER	12.92	12,805	1,423	
PR I-39	2630+85.63	2644+44.38	MEDIAN CONCRETE BARRIER	12.92	17,551	1,950	
PR I-39	2644+55.63	2647+06.61	MEDIAN CONCRETE BARRIER	12.92	3,242	360	
PR I-39	2649+46.88	2656+94.38	MEDIAN CONCRETE BARRIER	12.92	9,655	1,073	
PR I-39	2657+05.63	2665+57.93	MEDIAN CONCRETE BARRIER	12.92	11,009	1,223	
PR I-39	2666+19.93	2672+94.38	MEDIAN CONCRETE BARRIER	12.92	8,712	968	
PR I-39	2673+05.63	2678+94.38	MEDIAN CONCRETE BARRIER	12.92	7,605	845	
PR I-39	2679+05.63	2681+96.21	MEDIAN CONCRETE BARRIER	12.92	3,753	417	
PR I-39	2686+15.89	2686+44.00	MEDIAN CONCRETE BARRIER	12.92	363	40	
PR I-39	2686+56.00	2688+94.00	MEDIAN CONCRETE BARRIER	12.92	3,074	342	
PR I-39	2689+06.00	2699+89.38	MEDIAN CONCRETE BARRIER	12.92	13,994	1,555	
PR I-39	2700+00.63	2706+94.38	MEDIAN CONCRETE BARRIER	12.92	8,961	996	
PR I-39	2707+05.63	2722+83.84	MEDIAN CONCRETE BARRIER	12.92	20,385	2,265	
PR I-39	2725+80.47	2731+98.34	MEDIAN CONCRETE BARRIER	12.92	7,981	887	

42001300
PROTECTIVE COAT
87% FED / 13% STATE

ROAD	STA	STA	DESCRIPTION	WIDTH (FT)	SQ FT	SQ YD	REMARKS
I-39							
PR I-39	2704+72.08	2705+10.78	NB OUTSIDE CONCRETE BARRIER	8.92	345	38	
PR I-39	2646+66.02	2646+77.49	LT CONCRETE SHOULDER CURB	0.92	11	1	
PR I-39	2649+21.14	2649+43.66	LT CONCRETE SHOULDER CURB	0.92	21	2	
PR I-39	2680+63.94	2680+75.40	LT CONCRETE SHOULDER CURB	0.83	10	1	
PR I-39	2684+94.22	2685+21.78	LT CONCRETE SHOULDER CURB	0.83	23	3	
PR I-39	2687+36.66	2687+48.12	RT CONCRETE SHOULDER CURB	0.83	10	1	
PR I-39	2722+47.45	2722+58.92	LT CONCRETE SHOULDER CURB	1.08	12	1	
PR I-39	2680+18.62	2683+17.01	TYPE A GUTTER AND OUTLET	VAR 3.0-7.0	963	107	
PR I-39	2687+40.20	2689+36.35	TYPE A GUTTER AND OUTLET	VAR 3.0-8.0	666	74	
PR RAMP B	203+60.00	213+40.00	TYPE A GUTTER	3.00	2,940	327	
					SUBTOTAL	169,545	
HARRISON							
DDI EB	3010+47.50	3013+80.10	EB PAVEMENT	14	4,706	523	
DDI WB	2010+39.50	2013+73.50	WB PAVEMENT	14	4,734	526	
HARRISON	151+34.77	152+08.66	MEDIAN	CT	1535	171	
HARRISON	1311+13.21	1312+77.80	MEDIAN	CT	1245	139	
HARRISON AVE	149+83.16	1313+81.41	EB LT B-6.24 C&G	2.58	1532	170	
HARRISON AVE	151+34.34	1312+77.77	WB RT B-6.24 C&G	2.58	876	97	
HARRISON AVE	151+35.23	1312+77.77	EB RT B-6.24 C&G	2.58	873	97	
					SUBTOTAL	1,724	
					GRAND TOTAL	171,269	

NOTE: AREAS MEASURED IN CADD.

42000506
PORTLAND CEMENT CONCRETE PAVEMENT 10 1/4" (JOINTED)
87% FED / 13% STATE

ROAD	STA	STA	LENGTH (FT)	WIDTH (FT)	SQ FT	SQ YD	REMARKS
I-39							
PR RAMP B	210+25.54	217+13.88	688.34	24	16,606	1,845	
PR RAMP D	412+00.00	413+30.36	130.36	16	2,086	232	
					SUBTOTAL	2,077	
HARRISON							
DDI EB	3010+47.50	3013+80.10	332.60	14	4,706	523	
DDI WB	2010+39.50	2013+73.50	334.00	14	4,734	526	
					SUBTOTAL	1,049	
					GRAND TOTAL	3,126	

NOTE: AREAS MEASURED IN CADD.

42100350
CONTINUOUSLY REINFORCED PORTLAND CEMENT CONCRETE PAVEMENT 12 1/2"
87% FED / 13% STATE

ROAD	STA	STA	DESCRIPTION	WIDTH (FT)	SQ FT	SQ YD	REMARKS
I-39							
PR I-39	2620+83.00	2630+79.71	SB PAVEMENT	VAR 48-60	53,421	5,936	
PR I-39	2620+83.00	2645+91.89	NB PAVEMENT	48	121,215	13,468	
PR I-39	2630+79.71	2645+61.46	SB PAVEMENT	60	70,672	7,852	
PR I-39	2650+62.16	2679+60.40	SB PAVEMENT	48	138,766	15,418	
PR I-39	2650+87.21	2680+81.21	NB PAVEMENT	48	144,053	16,006	
PR I-39	2687+30.85	2705+84.10	SB PAVEMENT	48	88,955	9,884	
PR I-39	2688+54.95	2699+95.71	NB PAVEMENT	48	54,757	6,084	
PR I-39	2699+95.71	2710+21.51	NB PAVEMENT	VAR 48-54.3	52,407	5,823	
PR I-39	2705+84.10	2709+84.24	SB PAVEMENT	VAR 48-56	20,805	2,312	
PR I-39	2709+84.24	2721+42.91	SB PAVEMENT	36	41,589	4,621	
PR I-39	2710+21.51	2721+69.07	NB PAVEMENT	24	27,610	3,068	
PR I-39	2726+95.71	2732+35.00	SB PAVEMENT	36	19,326	2,147	
PR I-39	2727+13.26	2731+97.70	NB PAVEMENT	24	11,671	1,297	
					SUBTOTAL	93,917	
					GRAND TOTAL	93,917	

NOTE: AREAS MEASURED IN CADD.

MODEL: Schedules-9 [Sheet]
FILE NAME: c:\pwworkfr\benesch projects\projects\d0173723\D264C244-MI_sht-Schedules.dgn

benesch
Alfred Benesch & Company
35 W Wacker Drive, Suite 3300
Chicago, Illinois 60601
312-565-0450 Job No. 10800.00

USER NAME = agibson	DESIGNED - A. GIBSON	REVISED -	
	DRAWN - J.MAJCHER	REVISED -	
PLOT SCALE = 0.16666633 ' / in.	CHECKED - J.TARDY	REVISED -	
PLOT DATE = 2/6/2025	DATE - 02/27/24	REVISED -	

STATE OF ILLINOIS
DEPARTMENT OF TRANSPORTATION

SCHEDULE OF QUANTITIES

SCALE: 1"=1'-0" | SHEET 9 OF 39 SHEETS | STA. TO STA.

F.A.I RTE.	SECTION	COUNTY	TOTAL SHEETS	SHEET NO.
*	(201-3)R & (4-1.5)R	WINNEBAGO	1685	57
	CONTRACT NO. 64C24			
	ILLINOIS	FED. AID PROJECT		

* FAI ROUTE 39 (I-39) & FAP 301 (US 20)

42100615
PAVEMENT REINFORCEMENT
87% FED / 13% STATE

ROAD	STA	STA	DESCRIPTION	WIDTH (FT)	SQ FT	SQ YD	REMARKS
I-39							
PR I-39	2620+83.00	2630+79.71	SB PAVEMENT	VAR 48-60	53,421	5,936	
PR I-39	2620+83.00	2645+91.89	NB PAVEMENT	48	121,215	13,468	
PR I-39	2630+79.71	2645+61.46	SB PAVEMENT	60	70,672	7,852	
PR I-39	2650+62.16	2679+60.40	SB PAVEMENT	48	138,766	15,418	
PR I-39	2650+87.21	2680+81.21	NB PAVEMENT	48	144,053	16,006	
PR I-39	2687+30.85	2705+84.10	SB PAVEMENT	48	88,955	9,884	
PR I-39	2688+54.95	2699+95.71	NB PAVEMENT	48	54,757	6,084	
PR I-39	2699+95.71	2710+21.51	NB PAVEMENT	VAR 48-54.3	52,407	5,823	
PR I-39	2705+84.10	2709+84.24	SB PAVEMENT	VAR 48-56	20,805	2,312	
PR I-39	2709+84.24	2721+42.91	SB PAVEMENT	36	41,589	4,621	
PR I-39	2710+21.51	2721+69.07	NB PAVEMENT	24	27,610	3,068	
PR I-39	2726+95.71	2732+35.00	SB PAVEMENT	36	19,326	2,147	
PR I-39	2727+13.26	2731+97.70	NB PAVEMENT	24	11,671	1,297	
					SUBTOTAL	93,917	
					GRAND TOTAL	93,917	

NOTE: AREAS MEASURED IN CADD.

42101020
WIDE FLANGE BEAM TERMINAL JOINT COMPLETE 24'
87% FED / 13% STATE

ROAD	STA	EACH	REMARKS
I-39			
PR I-39	2721+69.07	1	
PR I-39	2727+13.26	1	
	SUBTOTAL	2	
	GRAND TOTAL	2	

42101030
WIDE FLANGE BEAM TERMINAL JOINT COMPLETE 36'
87% FED / 13% STATE

ROAD	STA	EACH	REMARKS
I-39			
PR I-39	2721+42.91	1	
PR I-39	2726+95.71	1	
	SUBTOTAL	2	
	GRAND TOTAL	2	

42101040
WIDE FLANGE BEAM TERMINAL JOINT COMPLETE 48'
87% FED / 13% STATE

ROAD	STA	EACH	REMARKS
I-39			
PR I-39	2645+61.46	1	
PR I-39	2645+91.89	1	
PR I-39	2650+62.16	1	
PR I-39	2650+87.21	1	
PR I-39	2679+60.40	1	
PR I-39	2680+81.21	1	
PR I-39	2687+30.85	1	
PR I-39	2688+54.95	1	
	SUBTOTAL	8	
	GRAND TOTAL	8	

42400100
PORTLAND CEMENT CONCRETE SIDEWALK 4 INCH
87% FED / 13% STATE

ROAD	STA	STA	OFFSET	SQ FT	REMARKS
CHERRY VALLEY PATH					
CHERRY VALLEY PATH				977	
			SUBTOTAL	977	
			GRAND TOTAL	977	

42400800
DETECTABLE WARNINGS
87% FED / 13% STATE

ROAD	STA	OFFSET	LT/RT	DESCRIPTION	SQ FT	REMARKS
CHERRY VALLEY PATH						
CHERRY VALLEY PATH					20	
				SUBTOTAL	20	
				TOTAL	20	

44000690
HOT-MIX ASPHALT SURFACE CORRECTION
87% FED / 13% STATE

ROAD	STA	STA	OFFSET	SQ YD	REMARKS
CHERRY VALLEY PATH					
CHERRY VALLEY PATH				84	
			SUBTOTAL	84	
			GRAND TOTAL	84	

48100500
AGGREGATE SHOULDERS, TYPE A 6"
87% FED / 13% STATE

ROAD	STA	STA	OFFSET	AREA (SF)	AREA (SY)	REMARKS
I-39						
PR I-39	2620+83.00	2634+67.97	RT	2804	312	
PR I-39	2620+83.00	2636+26.79	LT	3046	338	
PR I-39	2651+84.03	2654+52.33	LT	528	59	
PR I-39	2655+40.00	2679+17.48	RT	4770	530	
PR I-39	2668+63.00	2675+75.36	LT	1419	158	
PR I-39	2689+11.70	2702+08.49	RT	2592	288	
PR I-39	2694+83.98	2709+83.80	LT	2998	333	
PR I-39	2713+30.21	2721+83.22	LT	1692	188	
PR I-39	2715+79.83	2717+18.99	RT	277	31	
PR I-39	2726+35.05	2731+97.06	RT	1132	126	
PR I-39	2728+00.58	2732+35.00	LT	857	95	
PR RAMP B	213+66.40	217+13.88	RT	688	76	
PR RAMP B	215+80.52	217+13.88	LT	277	31	
PR RAMP D	412+00.00	413+30.35	RT	261	29	
				SUBTOTAL	2594	
				GRAND TOTAL	2594	

MODEL: Schedules-10 [Sheet]
FILE NAME: c:\pwworkdir\benesch projects\projects\d0173723\D264C24-MI-sht-Schedules.dgn

benesch
Alfred Benesch & Company
35 W Wacker Drive, Suite 3200
Chicago, Illinois 60601
312-565-0450 Job No. 10800.00

USER NAME = agibson	DESIGNED - A. GIBSON	REVISED -	
	DRAWN - J.MAJCHER	REVISED -	
PLOT SCALE = 0.16666633 ' / in.	CHECKED - J.TARDY	REVISED -	
PLOT DATE = 2/6/2025	DATE - 02/27/24	REVISED -	

STATE OF ILLINOIS
DEPARTMENT OF TRANSPORTATION

SCHEDULE OF QUANTITIES

SCALE: 1"=1'-0" | SHEET 10 OF 39 SHEETS | STA. TO STA.

F.A.I RTE.	SECTION	COUNTY	TOTAL SHEETS	SHEET NO.
*	(201-3)R & (4-1.5)R	WINNEBAGO	1685	58

CONTRACT NO. 64C24

ILLINOIS | FED. AID PROJECT

* FAI ROUTE 39 (I-39) & FAP 301 (US 20)

48300505
PORTLAND CEMENT CONCRETE SHOULDERS 10 1/4"
87% FED / 13% STATE

ROAD	STA	STA	DESCRIPTION	WIDTH (FT)	SQ FT	SQ YD	REMARKS
I-39							
PR RAMP B	215+80.52	217+13.88	INSIDE SHOULDER	6	826	92	
PR RAMP B	210+25.54	217+13.88	OUTSIDE SHOULDER	VAR 10-12	7,822	869	
PR RAMP D	412+00.00	413+30.36	OUTSIDE SHOULDER	6	782	87	
					SUBTOTAL	1,048	
					GRAND TOTAL	1,048	

NOTE: AREAS MEASURED IN CADD.

48300710
PORTLAND CEMENT CONCRETE SHOULDERS 12 1/2"
87% FED / 13% STATE

ROAD	STA	STA	DESCRIPTION	WIDTH (FT)	SQ FT	SQ YD	REMARKS
I-39							
PR I-39	2620+83.00	2646+61.61	SB INSIDE SHOULDER	10	25,749	2,861	
PR I-39	2620+83.00	2646+61.61	SB OUTSIDE SHOULDER	12	30,566	3,396	
PR I-39	2620+83.00	2646+91.73	NB INSIDE SHOULDER	10	26,125	2,903	
PR I-39	2620+83.00	2646+91.73	NB OUTSIDE SHOULDER	12	31,675	3,519	
PR I-39	2649+62.01	2665+57.93	SB INSIDE SHOULDER	10	15,877	1,764	
PR I-39	2649+62.01	2680+60.40	SB OUTSIDE SHOULDER	12	37,008	4,112	
PR I-39	2649+87.36	2665+57.93	NB INSIDE SHOULDER	10	15,657	1,740	
PR I-39	2649+87.36	2681+81.21	NB OUTSIDE SHOULDER	12	38,495	4,277	
PR I-39	2665+57.93	2666+19.93	SB INSIDE SHOULDER	12	900	100	
PR I-39	2665+57.93	2666+19.93	NB INSIDE SHOULDER	12	900	100	
PR I-39	2666+19.93	2680+60.40	SB INSIDE SHOULDER	10	14,340	1,593	
PR I-39	2666+19.93	2681+81.21	NB INSIDE SHOULDER	10	15,548	1,728	
PR I-39	2686+30.85	2722+43.05	SB INSIDE SHOULDER	10	36,112	4,012	
PR I-39	2686+30.85	2705+84.10	SB OUTSIDE SHOULDER	12	23,439	2,604	
PR I-39	2687+54.95	2722+68.91	NB INSIDE SHOULDER	10	35,150	3,906	
PR I-39	2687+54.95	2710+21.51	NB OUTSIDE SHOULDER	12	27,195	3,022	
PR I-39	2705+84.10	2709+84.24	SB OUTSIDE SHOULDER	VAR 6-12	3,299	367	
PR I-39	2709+84.24	2711+14.57	RAMP D GORE	VAR 4-17.9	2,839	315	
PR I-39	2710+21.51	2715+79.83	RAMP B GORE	VAR 6.3-23.9	5,925	658	
PR I-39	2711+14.57	2722+43.05	SB OUTSIDE SHOULDER	12	10,871	1,208	
PR I-39	2715+79.83	2722+68.91	NB OUTSIDE SHOULDER	12	8,322	925	
PR I-39	2725+95.56	2732+35.00	SB INSIDE SHOULDER	10	6,671	741	
PR I-39	2725+95.56	2732+35.00	SB OUTSIDE SHOULDER	12	7,609	845	
PR I-39	2726+13.42	2731+97.70	NB INSIDE SHOULDER	10	5,854	650	
PR I-39	2726+13.42	2731+97.70	NB OUTSIDE SHOULDER	12	7,049	783	
					SUBTOTAL	48,131	
					GRAND TOTAL	48,131	

NOTE: AREAS MEASURED IN CADD.

60600095
CLASS SI CONCRETE (OUTLET)
87% FED / 13% STATE

ROAD	STA	OFFSET	LT/RT	STA	OFFSET	LT/RT	CU YD	REMARKS
PR I-39	2680+18.62	84.6	RT	2680+70.00	78.0	RT	4.5	
PR I-39	2688+80.00	78.0	RT	2689+36.35	85.6	RT	4.9	
						SUBTOTAL	9.4	
						GRAND TOTAL	9.4	

60600605
CONCRETE CURB, TYPE B
87% FED / 13% STATE

ROAD	STA	STA	OFFSET	FOOT	REMARKS
CHERRY VALLEY PATH					
CHERRY VALLEY PATH				31	
			SUBTOTAL	31	
			GRAND TOTAL	31	

60602500
CONCRETE GUTTER, TYPE A
87% FED / 13% STATE

ROAD	STA	OFFSET	LT/RT	STA	OFFSET	LT/RT	FOOT	REMARKS
PR I-39	2680+70.00	78.0	RT	2683+17.01	78.0	RT	247	
PR I-39	2687+40.20	78.0	RT	2688+80.00	78.0	RT	140	
PR RAMP B	203+60.00	16.5	RT	213+40.00	16.5	RT	980	
						SUBTOTAL	1,367	
						GRAND TOTAL	1,367	

60604400
COMBINATION CONCRETE CURB AND GUTTER, TYPE B-6.18
87% FED / 13% STATE

ROAD	STA	OFFSET	LT/RT	STA	OFFSET	LT/RT	DESCRIPTION	LENGTH (FOOT)	REMARKS
CHERRY VALLEY PATH									
CHERRY VALLEY PATH								76	
							SUBTOTAL	76	
							GRAND TOTAL	76	

60605000
COMBINATION CONCRETE CURB AND GUTTER TYPE B-6.24
87% FED / 13% STATE

ROAD	STA	OFFSET	LT/RT	STA	OFFSET	LT/RT	FOOT	REMARKS
HARRISON AVE	149+83.16	56.0	LT	1313+81.41	60.1	LT	593	
HARRISON AVE	151+34.34	8.9	RT	1312+77.77	6.0	RT	339	
HARRISON AVE	151+35.23	7.4	LT	1312+77.77	5.4	LT	338	
						SUBTOTAL	1,270	
						GRAND TOTAL	1,270	

60618300
CONCRETE MEDIAN SURFACE, 4 INCH
87% FED / 13% STATE

ROAD	STA	STA	DESCRIPTION	OFFSET	AREA (SF)	AREA (SY)	REMARKS
HARRISON							
PR HARRISON	151+34.77	153+08.66	MEDIAN	CT	1382	154	
PR HARRISON	1311+13.21	1312+77.80	MEDIAN	CT	1245	139	
					SUBTOTAL	293	
					GRAND TOTAL	293	

63500105
DELINEATORS
87% FED / 13% STATE

ROAD	STA	STA	OFFSET	SINGLE/ DOUBLE	SPACING (FOOT)	COLOR	EACH	REMARKS
I-39								
PR RAMP B	215+80.52	217+13.88	LT	SINGLE	100	AMBER	2	
PR RAMP B	210+25.54	217+13.88	RT	SINGLE	100	CRYSTAL	7	
PR RAMP D	412+00.00	413+30.36	RT	DOUBLE	100	CRYSTAL	4	
PR I-39	2620+83.00	2646+61.61	LT	SINGLE	400	CRYSTAL	7	
PR I-39	2620+83.00	2646+91.73	RT	SINGLE	400	CRYSTAL	7	
PR I-39	2649+62.01	2680+60.40	LT	SINGLE	400	CRYSTAL	8	
PR I-39	2649+87.36	2681+81.21	RT	SINGLE	400	CRYSTAL	8	
PR I-39	2686+30.85	2705+84.10	LT	SINGLE	400	CRYSTAL	5	
PR I-39	2687+54.95	2710+21.51	RT	SINGLE	400	CRYSTAL	6	
PR I-39	2705+84.10	2709+84.24	LT	DOUBLE	100	AMBER	10	
PR I-39	2713+30.21	2722+43.05	LT	SINGLE	400	CRYSTAL	3	
PR I-39	2715+79.83	2722+68.91	RT	SINGLE	400	CRYSTAL	2	
PR I-39	2725+95.56	2732+35.00	LT	SINGLE	400	CRYSTAL	2	
PR I-39	2726+13.42	2731+97.70	RT	SINGLE	400	CRYSTAL	2	
						SUBTOTAL	73	
						GRAND TOTAL	73	

NOTE: SEE DRAINAGE SCHEDULES FOR ADDITIONAL QUANTITIES

63700280
CONCRETE BARRIER, DOUBLE FACE, 44 INCH HEIGHT
87% FED / 13% STATE

ROAD	STA	STA	DESCRIPTION	FOOT	REMARKS
I-39					
PR I-39	2620+83.00	2630+74.38	MEDIAN	991.38	
PR I-39	2630+85.63	2644+44.38	MEDIAN	1358.75	
PR I-39	2644+55.63	2644+95.00	MEDIAN	39.37	
PR I-39	2651+58.49	2656+94.38	MEDIAN	535.89	
PR I-39	2657+05.63	2665+21.26	MEDIAN	815.63	
PR I-39	2666+56.60	2672+94.38	MEDIAN	637.78	
PR I-39	2673+05.63	2678+94.38	MEDIAN	588.75	
PR I-39	2679+05.63	2681+96.21	MEDIAN	290.58	
PR I-39	2686+15.89	2686+44.00	MEDIAN	28.11	
PR I-39	2686+56.00	2688+94.00	MEDIAN	238	
PR I-39	2689+06.00	2699+89.38	MEDIAN	1083.38	
PR I-39	2700+00.63	2706+94.38	MEDIAN	693.75	
PR I-39	2707+05.63	2720+78.79	MEDIAN	1373.16	
PR I-39	2727+80.08	2731+98.34	MEDIAN	418.26	
PR I-39	2704+72.08	2705+10.78	NB OUTSIDE	38.70	
			SUBTOTAL	9,132	
			GRAND TOTAL	9,132	

63700380
CONCRETE BARRIER, VARIABLE CROSS SECTION 44 INCH HEIGHT
87% FED / 13% STATE

ROAD	STA	STA	DESCRIPTION	FOOT	REMARKS
I-39					
PR I-39	2644+95.00	2647+06.61	MEDIAN	211.61	
PR I-39	2649+46.88	2651+58.49	MEDIAN	211.91	
PR I-39	2720+78.79	2722+83.84	MEDIAN	205.05	
PR I-39	2725+80.47	2727+80.08	MEDIAN	199.61	
			SUBTOTAL	828	
			GRAND TOTAL	828	

63700805
CONCRETE BARRIER TRANSITION
87% FED / 13% STATE

ROAD	STA	STA	DESCRIPTION	FOOT	REMARKS
I-39					
PR I-39	2665+21.26	2665+47.93	MEDIAN	26.67	
PR I-39	2666+29.93	2666+56.60	MEDIAN	26.67	
			SUBTOTAL	54	
			GRAND TOTAL	54	

63700900
CONCRETE BARRIER BASE
87% FED / 13% STATE

ROAD	STA	STA	DESCRIPTION	FOOT	REMARKS
I-39					
PR I-39	2704+72.08	2705+10.78	NB OUTSIDE	38.70	
			SUBTOTAL	39	
			GRAND TOTAL	39	

X1700072
CONCRETE BARRIER, VERTICAL FACE (SPECIAL)
87% FED / 13% STATE

ROAD	STA	STA	DESCRIPTION	FOOT	REMARKS
I-39					
PR I-39	2665+47.93	2665+57.93	MEDIAN	10.00	
PR I-39	2666+19.93	2666+29.93	MEDIAN	10.00	
			SUBTOTAL	20	
			GRAND TOTAL	20	

X6370048
CONCRETE BARRIER BASE (SPECIAL)
87% FED / 13% STATE

ROAD	STA	STA	DESCRIPTION	FOOT	REMARKS
I-39					
PR I-39	2620+83.00	2630+74.38	MEDIAN	991.38	
PR I-39	2630+85.63	2644+44.38	MEDIAN	1358.75	
PR I-39	2644+55.63	2647+06.61	MEDIAN	250.98	
PR I-39	2649+46.88	2656+94.38	MEDIAN	747.49	
PR I-39	2657+05.63	2665+57.93	MEDIAN	852.30	
PR I-39	2666+19.93	2672+94.38	MEDIAN	674.45	
PR I-39	2673+05.63	2678+94.38	MEDIAN	588.75	
PR I-39	2679+05.63	2681+96.21	MEDIAN	290.59	
PR I-39	2686+15.89	2686+44.00	MEDIAN	28.11	
PR I-39	2686+56.00	2688+94.00	MEDIAN	238.00	
PR I-39	2689+06.00	2699+89.38	MEDIAN	1083.38	
PR I-39	2700+00.63	2706+94.38	MEDIAN	693.75	
PR I-39	2707+05.63	2722+83.84	MEDIAN	1578.22	
PR I-39	2725+80.47	2731+98.34	MEDIAN	617.87	
			SUBTOTAL	9,995	
			GRAND TOTAL	9,995	

64200116					
SHOULDER RUMBLE STRIPS, 16 INCH					
87% FED / 13% STATE					
ROAD	STA	STA	DESCRIPTION	FOOT	REMARKS
I-39					
PR I-39	2620+83.00	2646+61.61	SB INSIDE SHOULDER	2,579	
PR I-39	2620+83.00	2646+61.61	SB OUTSIDE SHOULDER	2,579	
PR I-39	2620+83.00	2646+91.73	NB INSIDE SHOULDER	2,609	
PR I-39	2620+83.00	2646+91.73	NB OUTSIDE SHOULDER	2,609	
PR I-39	2649+62.01	2680+60.40	SB INSIDE SHOULDER	3,098	
PR I-39	2649+62.01	2680+60.40	SB OUTSIDE SHOULDER	3,098	
PR I-39	2649+87.36	2681+81.21	NB INSIDE SHOULDER	3,194	
PR I-39	2649+87.36	2681+81.21	NB OUTSIDE SHOULDER	3,194	
PR I-39	2686+30.85	2722+43.05	SB INSIDE SHOULDER	3,612	
PR I-39	2686+30.85	2709+84.24	SB OUTSIDE SHOULDER	2,353	
PR I-39	2687+54.95	2722+68.91	NB INSIDE SHOULDER	3,514	
PR I-39	2687+54.95	2710+21.51	NB OUTSIDE SHOULDER	2,267	
PR I-39	2713+30.21	2722+43.05	SB OUTSIDE SHOULDER	913	
PR I-39	2715+79.83	2722+68.91	NB OUTSIDE SHOULDER	689	
PR I-39	2725+95.56	2732+35.00	SB INSIDE SHOULDER	639	
PR I-39	2725+95.56	2732+35.00	SB OUTSIDE SHOULDER	639	
PR I-39	2726+13.42	2731+97.70	NB INSIDE SHOULDER	584	
PR I-39	2726+13.42	2731+97.70	NB OUTSIDE SHOULDER	584	
PR RAMP B	215+80.52	217+13.88	INSIDE SHOULDER	133	
PR RAMP B	210+25.54	217+13.88	OUTSIDE SHOULDER	688	
PR RAMP D	412+00.00	413+30.36	OUTSIDE SHOULDER	130	
SUBTOTAL				39,707	
GRAND TOTAL				39,707	

64300900					
IMPACT ATTENUATORS (SEVERE USE, WIDE), TEST LEVEL 2					
87% FED / 13% STATE					
ROAD	STA	STA	OFFSET	EACH	REMARKS
US20/HARRISON					
US20/HARRISON	152+19.62	152+40.55	CT	1	
US20/HARRISON	1311+68.42	1311+89.90	CT	1	
SUBTOTAL				2	
GRAND TOTAL				2	

66201120									
CONCRETE SHOULDER CURB									
87% FED / 13% STATE									
ROAD	STA	OFFSET	LT/RT	STA	OFFSET	LT/RT	HEIGHT (IN)	FOOT	REMARKS
PR I-39	2646+66.02	73.5	LT	2646+77.49	73.5	LT	4	11	
PR I-39	2649+21.14	73.5	LT	2649+43.66	73.5	LT	4	23	
PR I-39	2680+63.94	73.5	LT	2680+75.40	73.5	LT	4	11	
PR I-39	2684+94.22	73.5	LT	2685+21.78	73.5	LT	4	28	
PR I-39	2687+36.66	73.5	RT	2687+48.12	73.5	RT	4	11	
PR I-39	2722+47.45	61.5	LT	2722+58.92	61.5	LT	6	11	
SUBTOTAL								96	
GRAND TOTAL								96	

66400305								
CHAIN LINK FENCE, 6'								
87% FED / 13% STATE								
ROAD	STA	OFFSET	LT/RT	STA	OFFSET	LT/RT	FOOT	REMARKS
I-39	2642+50.00	137.0	LT	2647+11.41	160.0	LT	450	
I-39	2642+92.02	163.2	RT	2648+64.73	200.0	RT	610	
I-39	2649+67.66	180.0	RT	2662+00.47	169.5	RT	1,270	
I-39	2652+00.00	214.6	LT	2662+00.00	130.5	LT	981	
I-39	2669+24.60	130.5	LT	2674+00.00	130.4	LT	476	
I-39	2678+00.00	130.4	LT	2680+16.68	155.0	LT	218	
I-39	2684+50.00	130.3	LT	2710+25.00	155.1	LT	2,732	
I-39	2698+80.30	167.1	RT	2712+00.00	170.0	RT	1,498	
SUBTOTAL							8,234	
GRAND TOTAL							8,234	

66407500			
CHAIN LINK GATES, 6' X 10' DOUBLE			
87% FED / 13% STATE			
ROAD	STA	EACH	REMARKS
RAMP AD	67+75	1	RAMP AD @ LINDEN
RAMP DB	48+15.28	1	RAMP DB @ LINDEN
RAMP DB	50+00	1	RAMP DB @ LINDEN
PR I-39	2704+45	1	I-39
SUBTOTAL		4	
GRAND TOTAL		4	

MODEL: Schedules-13 [Sheet]
FILE NAME: c:\pwworkdir\benesch.projects\projects\d0173723\D264C24-ML-sht-Schedules.dgn

benesch
Alfred Benesch & Company
35 W Wacker Drive, Suite 3200
Chicago, Illinois 60601
312-565-0450 Job No. 10800.00

USER NAME = agibson	DESIGNED - A. GIBSON	REVISED -	
	DRAWN - J.MAJCHER	REVISED -	
PLOT SCALE = 0.16666633 ' / in.	CHECKED - J.TARDY	REVISED -	
PLOT DATE = 2/6/2025	DATE - 02/27/24	REVISED -	

STATE OF ILLINOIS
DEPARTMENT OF TRANSPORTATION

SCHEDULE OF QUANTITIES

SCALE: 1"=1'-0" | SHEET 13 OF 39 SHEETS | STA. TO STA.

F.A.I RTE.	SECTION	COUNTY	TOTAL SHEETS	SHEET NO.
*	(201-3)R & (4-1,5)R	WINNEBAGO	1685	61
		CONTRACT NO. 64C24		
		ILLINOIS	FED. AID PROJECT	

* FAI ROUTE 39 (I-39) & FAP 301 (US 20)

66600105				
FURNISHING AND ERECTING RIGHT OF WAY MARKERS				
87% FED / 13% STATE				
ROAD	STA	OFFSET	EACH	REMARKS
PR I-39	2642+50.00	136.01' LT	1	
PR I-39	2642+92.02	162.16' RT	1	
PR I-39	2644+00.00	144.00' LT	1	
PR I-39	2644+00.00	174.00' RT	1	
PR I-39	2646+25.00	189.00' RT	1	
PR I-39	2647+11.41	159.00' LT	1	
PR I-39	2647+85.72	174.00' RT	1	
PR I-39	2647+94.76	199.00' RT	1	
PR I-39	2648+64.73	199.00' RT	1	
PR I-39	2649+67.66	179.00' RT	1	
PR I-39	2651+00.00	174.00' RT	1	
PR I-39	2652+00.00	165.41' RT	1	
PR I-39	2652+00.00	213.61' LT	1	
PR I-39	2653+25.00	179.00' LT	1	
PR I-39	2655+00.00	179.00' LT	1	
PR I-39	2657+00.00	149.00' LT	1	
PR I-39	2659+00.00	159.00' LT	1	
PR I-39	2662+00.00	129.53' LT	1	
PR I-39	2671+50.00	139.00' LT	1	
PR I-39	2674+00.00	129.43' LT	1	
PR I-39	2678+00.00	129.40' LT	1	
PR I-39	2680+16.68	154.00' LT	1	
PR I-39	2683+46.31	129.35' LT	1	
PR I-39	2685+00.00	149.00' LT	1	
PR I-39	2687+00.00	154.00' LT	1	
PR I-39	2688+30.97	147.45' LT	1	
PR I-39	2689+00.00	144.00' LT	1	
PR I-39	2690+50.00	129.29' LT	1	
PR I-39	2699+00.00	129.22' LT	1	
PR I-39	2700+50.00	139.00' LT	1	
PR I-39	2704+00.00	149.00' LT	1	
PR I-39	2704+00.00	168.83' RT	1	
PR I-39	2704+55.00	179.57' RT	1	
PR I-39	2709+75.00	199.00' LT	1	
PR I-39	2710+25.00	154.12' LT	1	
		GRAND TOTAL	35	

MODEL: Schedules-14 [Sheet]
FILE NAME: c:\pwworkdir\benesch.projects\projects\d0173723\D284C24-ML-sht-Schedules.dgn

X5012506					
CONCRETE WALL REMOVAL					
87% FED / 13% STATE					
ROAD	STA	STA	OFFSET	FOOT	REMARKS
CHERRY VALLEY PATH					
CHERRY VALLEY PATH				145	
			SUBTOTAL	145	
			GRAND TOTAL	145	

X6026056				
SANITARY MANHOLES TO BE ADJUSTED WITH NEW TYPE 1 FRAME, CLOSED LID				
100% FRSA				
ROAD	STA	OFFSET	EACH	REMARKS
PR I-39	2650+80.00	168' RT	1	MH 149-073
PR I-39	2707+60.00	150' LT	1	MH 148-001
PR I-39	2707+40.00	180' RT	1	MH 156-011
PR I-39	2707+70.00	180' RT	1	MH 156-026
MILL RD	00+42.00		1	MH 156-122
		SUBTOTAL	5	
		GRAND TOTAL	5	

X6026057				
SANITARY MANHOLES TO BE RECONSTRUCTED WITH NEW TYPE 1 FRAME, CLOSED LID				
100% FRSA				
ROAD	STA	OFFSET	EACH	REMARKS
PR I-39	2707+80.00	150' LT	1	MH 156-027
PR I-39	2650+80.00	160' LT	1	MH 149-074
		SUBTOTAL	2	
		GRAND TOTAL	2	

50104650							
SLOPE WALL REMOVAL							
87% FED / 13% STATE							
ROAD	STA	STA	DESCRIPTION	WIDTH (FT)	SQ FT	SQ YD	REMARKS
I-39							
PR I-39	2664+60.09	2665+41.94	PERRYVILLE BRIDGE SOUTH SLOPE WALL	6	491	55	
PR I-39	2666+35.92	2667+17.77	PERRYVILLE BRIDGE NORTH SLOPE WALL	6	491	55	
					SUBTOTAL	110	
					GRAND TOTAL	110	
NOTE: SEE STRUCTURAL BILL OF MATERIALS FOR ADDITIONAL QUANTITIES							

51100100							
SLOPE WALL 4 INCH							
87% FED / 13% STATE							
ROAD	STA	STA	DESCRIPTION	WIDTH (FT)	SQ FT	SQ YD	REMARKS
I-39							
PR I-39	2664+60.09	2665+41.94	PERRYVILLE BRIDGE SOUTH SLOPE WALL	6	491	55	
PR I-39	2666+35.92	2667+17.77	PERRYVILLE BRIDGE NORTH SLOPE WALL	6	491	55	
					SUBTOTAL	110	
					GRAND TOTAL	110	
NOTE: SEE STRUCTURAL BILL OF MATERIALS FOR ADDITIONAL QUANTITIES							

X7820007							
GUARDRAIL REFLECTORS, TYPE C (SPECIAL)							
87% FED / 13% STATE							
ROAD	STA	STA	O/S	LENGTH	SPACING	EACH	REMARKS
I-39							
PR I-39	2620+83.00	2665+57.93	LT	4474.93	400	12	MEDIAN BARRIER
PR I-39	2620+83.00	2665+57.93	RT	4474.93	400	12	MEDIAN BARRIER
PR I-39	2666+19.93	2731+98.34	LT	6578.41	400	17	MEDIAN BARRIER
PR I-39	2666+19.93	2731+98.34	RT	6578.41	400	17	MEDIAN BARRIER
PR I-39	2704+72.08	2705+10.78	RT	38.70	400	1	NB RIGHT SHOULDER BARRIER
PR I-39	2646+93.01	2649+01.73	LT	208.72	80	3	I-39 OVER CN SB PARAPET WALL
PR I-39	2647+55.21	2649+57.44	RT	202.23	80	3	I-39 OVER CN NB PARAPET WALL
PR I-39	2680+90.40	2684+80.38	LT	389.98	80	5	I-39 OVER UP SB PARAPET WALL
PR I-39	2683+33.98	2687+21.66	RT	387.68	80	5	I-39 OVER UP NB PARAPET WALL
PR I-39	2722+74.07	2725+43.46	LT	269.39	80	4	I-39 OVER HARRISON SB PARAPET WALL
PR I-39	2723+18.43	2725+82.89	RT	264.46	80	4	I-39 OVER HARRISON NB PARAPET WALL
					SUBTOTAL	83	
GRAND TOTAL (FOR BARRIER AND BRIDGE PARAPET WALLS)						83	
NOTES: SEE GUARDRAIL SCHEDULE FOR ADDITIONAL QUANTITIES							

X6350206							
LINEAR DELINEATOR PANELS, 6 INCH							
87% FED / 13% STATE							
ROAD	STA	STA	SIDE	LENGTH	SPACING	EACH	REMARKS
I-39							
PR I-39	2647+06.61	2649+46.88	LT	240.27	50	5	SB SIDE OF I-39 OVER CN MEDIAN PARAPET WALL
PR I-39	2647+55.21	2649+57.44	RT	202.23	50	5	I-39 OVER CN NB PARAPET WALL
PR I-39	2722+83.84	2725+80.47	LT	296.63	50	6	SB SIDE OF I-39 OVER HARRISON MEDIAN PARAPET WALL
PR I-39	2723+18.43	2725+82.89	RT	264.46	50	6	I-39 OVER HARRISON NB PARAPET WALL
					SUBTOTAL	22	
					GRAND TOTAL	22	

X2100104
GEOTECHNICAL REINFORCEMENT
87% FED / 13% STATE

ROAD	STA	STA	DESCRIPTION	WIDTH (FT)	SQ FT	SQ YD	REMARKS
I-39							
PR I-39	2620+83.00	2625+50.00	SB OUTSIDE SHOULDER	12.5	5,773	641	
PR I-39	2620+83.00	2625+50.00	SB PAVEMENT	VAR 60-54.3	26,528	2,948	
PR I-39	2620+83.00	2625+50.00	SB INSIDE SHOULDER	10	4,664	518	
PR I-39	2620+83.00	2625+50.00	MEDIAN BARRIER BASE	7	3,269	363	
PR I-39	2620+83.00	2625+50.00	NB INSIDE SHOULDER	10	4,676	520	
PR I-39	2620+83.00	2625+50.00	NB PAVEMENT	48	22,541	2,505	
PR I-39	2620+83.00	2625+50.00	NB OUTSIDE SHOULDER	12.5	5,896	655	
PR I-39	2625+50.00	2646+61.61	SB OUTSIDE SHOULDER	12.5	26,067	2,896	
PR I-39	2625+50.00	2630+79.71	SB PAVEMENT	VAR 54.3-48	26,892	2,988	
PR I-39	2630+79.71	2645+61.46	SB PAVEMENT	48	70,672	7,852	
PR I-39	2645+61.46	2646+61.61	SB TERMINAL SYSTEM	48	4,776	531	
PR I-39	2646+61.61	2646+88.50	SB PAVEMENT CONNECTOR	70.5	1,859	207	
PR I-39	2625+50.00	2646+61.61	SB INSIDE SHOULDER	10	21,085	2,343	
PR I-39	2625+50.00	2647+03.39	MEDIAN BARRIER BASE	7	15,065	1,674	
PR I-39	2625+50.00	2646+91.74	NB INSIDE SHOULDER	10	21,449	2,383	
PR I-39	2625+50.00	2645+91.89	NB PAVEMENT	48	98,652	10,961	
PR I-39	2645+91.89	2646+91.74	NB TERMINAL SYSTEM	48	4,824	536	
PR I-39	2646+91.74	2647+18.05	NB PAVEMENT CONNECTOR	70.5	1,897	211	
PR I-39	2625+50.00	2646+91.74	NB OUTSIDE SHOULDER	12	27,100	3,011	
PR I-39	2649+62.01	2656+00.00	SB OUTSIDE SHOULDER	12.5	7,879	875	
PR I-39	2649+37.03	2649+62.01	SB PAVEMENT CONNECTOR	70.5	1,785	198	
PR I-39	2649+62.01	2650+62.16	SB TERMINAL SYSTEM	48	4,776	531	
PR I-39	2650+62.16	2656+00.00	SB PAVEMENT	48	25,647	2,850	
PR I-39	2649+62.01	2656+00.00	SB INSIDE SHOULDER	10	6,371	708	
PR I-39	2649+50.05	2656+00.00	MEDIAN BARRIER BASE	7	4,549	505	
PR I-39	2649+87.36	2656+00.00	NB INSIDE SHOULDER	10	6,134	682	
PR I-39	2649+62.89	2649+87.36	NB PAVEMENT CONNECTOR	70.5	1,713	190	
PR I-39	2649+87.36	2650+87.21	NB TERMINAL SYSTEM	48	4,824	536	
PR I-39	2650+87.21	2656+00.00	NB PAVEMENT	48	24,775	2,753	
PR I-39	2649+87.36	2656+00.00	NB OUTSIDE SHOULDER	12.5	7,750	861	
PR I-39	2656+00.00	2663+50.00	SB OUTSIDE SHOULDER	12.5	9,290	1,032	
PR I-39	2656+00.00	2663+50.00	SB PAVEMENT	48	35,819	3,980	
PR I-39	2656+00.00	2663+50.00	SB INSIDE SHOULDER	10	7,491	832	
PR I-39	2656+00.00	2663+50.00	MEDIAN BARRIER BASE	7	5,250	583	
PR I-39	2656+00.00	2663+50.00	NB INSIDE SHOULDER	10	7,509	834	
PR I-39	2656+00.00	2663+50.00	NB PAVEMENT	48	36,181	4,020	
PR I-39	2656+00.00	2663+50.00	NB OUTSIDE SHOULDER	12.5	9,460	1,051	
PR I-39	2663+50.00	2668+50.00	SB OUTSIDE SHOULDER	12.5	6,250	694	
PR I-39	2663+50.00	2668+50.00	SB PAVEMENT	48	24,000	2,667	
PR I-39	2663+50.00	2668+50.00	SB INSIDE SHOULDER	10	5,000	556	
PR I-39	2663+50.00	2668+50.00	MEDIAN BARRIER BASE	7	3,500	389	
PR I-39	2663+50.00	2668+50.00	NB INSIDE SHOULDER	10	5,000	556	
PR I-39	2663+50.00	2668+50.00	NB PAVEMENT	48	24,000	2,667	
PR I-39	2663+50.00	2668+50.00	NB OUTSIDE SHOULDER	12.5	6,250	694	
PR I-39	2668+50.00	2674+50.00	SB OUTSIDE SHOULDER	12.5	7,500	833	
PR I-39	2668+50.00	2674+50.00	SB PAVEMENT	48	28,800	3,200	
PR I-39	2668+50.00	2674+50.00	SB INSIDE SHOULDER	10	6,000	667	
PR I-39	2668+50.00	2674+50.00	MEDIAN BARRIER BASE	7	4,200	467	
PR I-39	2668+50.00	2674+50.00	NB INSIDE SHOULDER	10	6,000	667	
PR I-39	2668+50.00	2674+50.00	NB PAVEMENT	48	28,800	3,200	
PR I-39	2668+50.00	2674+50.00	NB OUTSIDE SHOULDER	12.5	7,500	833	
PR I-39	2674+50.00	2675+50.00	SB OUTSIDE SHOULDER	12.5	1,250	139	
PR I-39	2674+50.00	2675+50.00	SB PAVEMENT	48	4,800	533	
PR I-39	2674+50.00	2675+50.00	SB INSIDE SHOULDER	10	1,000	111	
PR I-39	2674+50.00	2675+50.00	MEDIAN BARRIER BASE	7	700	78	
PR I-39	2674+50.00	2675+50.00	NB INSIDE SHOULDER	10	1,000	111	
PR I-39	2674+50.00	2675+50.00	NB PAVEMENT	48	4,800	533	
PR I-39	2674+50.00	2675+50.00	NB OUTSIDE SHOULDER	12.5	1,250	139	
PR I-39	2675+50.00	2679+50.00	SB OUTSIDE SHOULDER	12.5	5,000	556	
PR I-39	2675+50.00	2679+50.00	SB INSIDE SHOULDER	10	4,000	444	
PR I-39	2675+50.00	2679+50.00	MEDIAN BARRIER BASE	7	2,800	311	
PR I-39	2675+50.00	2679+50.00	NB INSIDE SHOULDER	10	4,000	444	
PR I-39	2675+50.00	2679+50.00	NB PAVEMENT	48	19,200	2,133	
PR I-39	2675+50.00	2679+50.00	NB OUTSIDE SHOULDER	12.5	5,000	556	
PR I-39	2679+50.00	2680+60.40	SB OUTSIDE SHOULDER	12.5	1,380	153	
PR I-39	2675+50.00	2679+60.40	SB PAVEMENT	48	19,699	2,189	
PR I-39	2679+60.40	2680+60.40	SB TERMINAL SYSTEM	48	4,800	533	
PR I-39	2680+60.40	2681+28.39	SB PAVEMENT CONNECTOR	70.5	4,680	520	

X2100104
GEOTECHNICAL REINFORCEMENT
87% FED / 13% STATE

ROAD	STA	STA	DESCRIPTION	WIDTH (FT)	SQ FT	SQ YD	REMARKS
I-39							
PR I-39	2680+60.40	2681+28.39	SB PAVEMENT CONNECTOR	70.5	4,680	520	
PR I-39	2679+50.00	2680+60.40	SB INSIDE SHOULDER	10	1,104	123	
PR I-39	2679+50.00	2681+89.81	MEDIAN BARRIER BASE	7	1,683	187	
PR I-39	2679+50.00	2681+81.21	NB INSIDE SHOULDER	10	2,312	257	
PR I-39	2679+50.00	2680+81.21	NB PAVEMENT	48	6,298	700	
PR I-39	2680+81.21	2681+81.21	NB TERMINAL SYSTEM	48	4,800	533	
PR I-39	2681+81.21	2682+52.48	NB PAVEMENT CONNECTOR	70.5	5,141	571	
PR I-39	2679+50.00	2681+81.21	NB OUTSIDE SHOULDER	12.5	2,890	321	
PR I-39	2686+30.85	2695+50.00	SB OUTSIDE SHOULDER	12.5	11,489	1,277	
PR I-39	2685+59.53	2686+30.85	SB PAVEMENT CONNECTOR	70.5	5,152	572	
PR I-39	2686+30.85	2687+30.85	SB TERMINAL SYSTEM	48	4,800	533	
PR I-39	2687+30.85	2695+50.00	SB PAVEMENT	48	39,319	4,369	
PR I-39	2686+30.85	2695+50.00	SB INSIDE SHOULDER	10	9,191	1,021	
PR I-39	2686+21.62	2695+50.00	MEDIAN BARRIER BASE	7	6,592	732	
PR I-39	2687+54.95	2695+50.00	NB INSIDE SHOULDER	10	7,951	883	
PR I-39	2695+50.00	2705+00.00	SB OUTSIDE SHOULDER	12.5	11,875	1,319	
PR I-39	2695+50.00	2705+00.00	SB PAVEMENT	48	45,600	5,067	
PR I-39	2695+50.00	2705+00.00	SB INSIDE SHOULDER	10	9,500	1,056	
PR I-39	2695+50.00	2705+00.00	MEDIAN BARRIER BASE	7	6,650	739	
PR I-39	2695+50.00	2705+00.00	NB INSIDE SHOULDER	10	9,500	1,056	
PR I-39	2695+50.00	2699+95.71	NB PAVEMENT	48	21,394	2,377	
PR I-39	2699+95.71	2705+00.00	NB PAVEMENT	VAR 48-51	24,972	2,775	
PR I-39	2695+50.00	2705+00.00	NB OUTSIDE SHOULDER	12.5	11,875	1,319	
PR I-39	2686+83.67	2687+54.95	NB PAVEMENT CONNECTOR	70.5	4,911	546	
PR I-39	2687+54.95	2688+54.95	NB TERMINAL SYSTEM	48	4,800	533	
PR I-39	2688+54.95	2695+50.00	NB PAVEMENT	48	33,363	3,707	
PR I-39	2687+54.95	2695+50.00	NB OUTSIDE SHOULDER	12.5	9,938	1,104	
PR I-39	2705+00.00	2705+84.13	SB OUTSIDE SHOULDER	12.5	1,051	117	
PR I-39	2705+84.13	2709+83.92	SB OUTSIDE SHOULDER	VAR 12.5-6.5	3,499	389	
PR I-39	2709+84.24	2713+30.21	RAMP D GORE	VAR 4.0-17.9	2,839	315	
PR I-39	2713+30.21	2722+43.00	SB OUTSIDE SHOULDER	12.5	11,324	1,258	
PR I-39	2705+00.00	2705+84.13	SB PAVEMENT	48	4,036	448	
PR I-39	2705+84.13	2709+84.24	SB PAVEMENT	VAR 48-56	20,806	2,312	
PR I-39	2709+84.24	2721+42.91	SB PAVEMENT	36	41,589	4,621	
PR I-39	2721+42.91	2722+43.11	SB TERMINAL SYSTEM	36	3,589	399	
PR I-39	2722+43.11	2722+67.78	SB PAVEMENT CONNECTOR	58.5	1,421	158	
PR I-39	2705+00.00	2722+43.11	SB INSIDE SHOULDER	10	17,419	1,935	
PR I-39	2705+00.00	2722+80.61	MEDIAN BARRIER BASE	7	12,560	1,396	
PR I-39	2705+00.00	2722+68.87	NB INSIDE SHOULDER	10	17,699	1,967	
PR I-39	2705+00.00	2710+21.51	NB PAVEMENT	VAR 51.0-54.3	27,435	3,048	
PR I-39	2710+21.51	2721+69.07	NB PAVEMENT	24	27,610	3,068	
PR I-39	2721+69.07	2722+68.87	NB TERMINAL SYSTEM	24	2,405	267	
PR I-39	2722+68.87	2722+90.91	NB PAVEMENT CONNECTOR	46.5	1,045	116	
PR I-39	2705+00.00	2710+21.51	NB OUTSIDE SHOULDER	12	6,515	724	
PR I-39	2710+21.51	2715+79.83	RAMP B GORE	VAR 6.3-23.9	5,925	658	
PR I-39	2715+79.83	2722+68.87	NB OUTSIDE SHOULDER	12.5	8,669	963	
PR I-39	2725+95.56	2732+35.00	SB OUTSIDE SHOULDER	12.5	7,927	881	
PR I-39	2725+72.43	2725+95.56	SB PAVEMENT CONNECTOR	58.5	1,367	152	
PR I-39	2725+95.56	2726+95.71	SB TERMINAL SYSTEM	36	3,589	399	
PR I-39	2726+95.71	2732+35.00	SB PAVEMENT	36	19,326	2,147	
PR I-39	2725+95.56	2732+35.00	SB INSIDE SHOULDER	10	6,689	743	
PR I-39	2725+83.65	2731+98.37	MEDIAN BARRIER BASE	7	4,304	478	
PR I-39	2726+13.42	2731+98.37	NB INSIDE SHOULDER	10	5,854	650	
PR I-39	2725+92.66	2726+13.42	NB PAVEMENT CONNECTOR	46.5	952	106	
PR I-39	2726+13.42	2727+13.26	NB TERMINAL SYSTEM	24	2,405	267	
PR I-39	2727+13.26	2731+98.37	NB PAVEMENT	24	11,671	1,297	
PR I-39	2726+13.42	2731+98.37	NB OUTSIDE SHOULDER	12.5	7,345	816	
PR RAMP B	210+25.54	217+13.88	RAMP B PAVEMENT	24	16,606	1,845	
PR RAMP B	215+80.52	217+13.88	RAMP B INSIDE SHOULDER	6.5	895	99	
PR RAMP B	210+25.54	217+13.88	RAMP B OUTSIDE SHOULDER	VAR 12.5-10.5	8,164	907	
PR RAMP D	412+00.00	413+30.36	RAMP D PAVEMENT	16	2,086	232	
PR RAMP D	412+00.00	413+30.36	RAMP D OUTSIDE SHOULDER	6.5	847	94	
					SUBTOTAL	163,291	
HARRISON							
PR DDI EB	3010+47.50	3013+80.10	EB PAVEMENT AND INSIDE C&G	19.08	6,423	714	
PR DDI WB	2010+39.50	2013+73.50	WB PAVEMENT AND INSIDE C&G	19.08	6,459	718	
PR HARRISON	149+83.16	1313+81.41	EB OUTSIDE C&G	3.08	1,826	203	
					SUBTOTAL	1,635	
					GRAND TOTAL	164,926	

NOTE: AREAS MEASURED IN CADD.

MODEL: Schedules-16 [Sheet]
FILE NAME: c:\pwworkdir\benesch projects\projects\d0173723\D264C24-ML-sht-Schedules.dgn

benesch
Alfred Benesch & Company
35 W Wacker Drive, Suite 3200
Chicago, Illinois 60601
312-565-0450 Job No. 10800.00

USER NAME = agibson	DESIGNED - A. GIBSON	REVISED -	
	DRAWN - J.MAJCHER	REVISED -	
PLOT SCALE = 0.16666633 ' / in.	CHECKED - J.TARDY	REVISED -	
PLOT DATE = 2/6/2025	DATE - 02/27/24	REVISED -	

STATE OF ILLINOIS
DEPARTMENT OF TRANSPORTATION

SCHEDULE OF QUANTITIES

SCALE: 1"=1'-0" | SHEET 16 OF 39 SHEETS | STA. TO STA.

F.A.I RTE.	SECTION	COUNTY	TOTAL SHEETS	SHEET NO.
*	(201-3)R & (4-1.5)R	WINNEBAGO	1685	64
		CONTRACT NO. 64C24		
	ILLINOIS	FED. AID PROJECT		

* FAI ROUTE 39 (I-39) & FAP 301 (US 20)

PAY LIMIT			25000210	25000310	25000312	25100127	25000320
			SEEDING CLASS 2A	SEEDING CLASS 4	SEEDING CLASS 4a	MULCH METHOD 3A	SEEDING, CLASS 5
			(ACRE)	(ACRE)	(ACRE)	(ACRE)	(ACRE)
Start STA.	Stop STA.						
Sheet 3	I-39 Wide - Plan 5						
2620+83.00	2630+00.00	LT	0.592		0.54	1.132	0.54
2620+83.00	2630+00.00	RT	0.659		0.715	1.374	0.715
Sheet 4	I-39 Wide - Plan 6						
2630+00.00	2644+00.00	LT	0.448	0.506	0.682	1.636	0.682
2630+00.00	2644+00.00	RT	0.41	0.605	0.908	1.923	0.908
Sheet 5	I-39 Wide - Plan 7						
2644+00.00	2659+00.00	LT	0.84	0.965	1.82	3.625	1.82
2644+00.00	2659+00.00	RT	0.318	1.813	0.996	3.127	0.996
Sheet 6	I-39 Wide - Plan 8						
2659+00.00	2674+00.00	LT	0.466	0.317	0.928	1.711	0.928
2659+00.00	2674+00.00	RT	0.600	0.123	1.559	2.282	1.559
Sheet 7	I-39 Wide - Plan 9						
2674+00.00	2689+00.00	LT	0.289	0.913	0.608	1.810	0.608
2674+00.00	2689+00.00	RT	0.480	1.022	1.068	2.570	1.068
Sheet 8	I-39 Wide - Plan 10						
2689+00.00	2704+00.00	LT	0.599	0.150	1.058	1.807	1.058
2689+00.00	2704+00.00	RT	0.658	0.127	1.967	2.752	1.967
Sheet 9	I-39 Wide - Plan 11						
2704+00.00	2718+00.00	LT	0.424	0.723	0.854	2.001	0.854
2704+00.00	2718+00.00	RT	0.350	0.208	2.167	2.725	2.167
Sheet 10	I-39 Wide - Plan 12						
2718+00.00	2733+00.00	LT	0.592	1.203		1.795	0
2718+00.00	2733+00.00	RT	0.981	2.912		3.893	0
Sheet 11	I-39 Wide - Plan 13						
2733+00.00	2748+00.00	RT	0.248	0.298		0.546	0
Sheet 12	Ramp DB-1						
17+01.19	30+16.00	RT	0.403	0.804	0.000	1.207	0
Sheet 13	Ramp DB-2						
30+16.00	45+16.00	RT	0.249	0.975	0.000	1.224	0
Sheet 14	Ramp DB-3						
45+16.00	60+16.00	RT	0.081	0.770	0.000	0.851	0
Sheet 15	Ramp DB-4						
60+16.00	75+16.00	RT	0.000	0.678	0.000	0.678	0
Sheet 16	Ramp DB-5						
75+16.00	82+65.79	RT	0.000	0.344	0.000	0.344	0
Sheet 17	Ramp AD-1						
69+11.29	78+00	RT	0.389	0.000	0.490	0.879	0.490
Sheet 18	Ramp AD-2						
78+00	87+21.27	RT	0.413	0.000	1.377	1.790	1.377
Sheet 19	Mill Rd						
0+00.00	6+00.00	LT	0.073			0.073	
Sheet 20	Mill Rd/Harrison						
6+00.00	9+001.35	LT	0.251	0.311		0.562	
						0.000	
Sheet 2	Stockpile		0.000	0.000	9.738	9.738	9.738
TOTAL			10.812	15.767	27.475	54.054	27.475
ADJUSTED TOTAL			11.00	16.00	27.50	54.25	27.50

PAY LIMIT	25000400	25000500	25000600
	NITROGEN FERT NUTR	PHOSPHORUS FERT NUTR	POTASSIUM FERT NUTR
	(POUND)	(POUND)	(POUND)
SEEDING, CLASS 2A	990	990	990
SEEDING, CLASS 4	1440	1440	1440
SEEDING CLASS 4A/5	2475	2475	2475
ADJUSTED TOTAL	4905	4905	4905

MODEL: Schedules-17 [Sheet]
FILE NAME: c:\pwworld\benesch projects\projects\d0173723\D264C214-MI-sht-Schedules.dgn

benesch
Alfred Benesch & Company
35 W Wacker Drive, Suite 3200
Chicago, Illinois 60601
312-565-0450 Job No. 10800.00

USER NAME = agibson	DESIGNED - A. GIBSON	REVISED -	
	DRAWN - J.MAJCHER	REVISED -	
PLOT SCALE = $SCALE$	CHECKED - J.TARDY	REVISED -	
PLOT DATE = 2/6/2025	DATE - 02/14/2025	REVISED -	

STATE OF ILLINOIS
DEPARTMENT OF TRANSPORTATION

SCHEDULE OF QUANTITIES

SCALE: 1"=1'-0" | SHEET 17 OF 39 SHEETS | STA. TO STA.

F.A.I RTE.	SECTION	COUNTY	TOTAL SHEETS	SHEET NO.
*	(201-3)R & (4-1.5)R	WINNEBAGO	1685	65
		CONTRACT NO. 64C24		
	ILLINOIS	FED. AID PROJECT		

* FAI ROUTE 39 (I-39) & FAP 301 (US 20)

PRESTAGE

PAY LIMIT			25000750	25100900	28000250	28000305	28000315	28000400	28000500	28000510	28001100	Z0013797	Z0023201
			MOWING	TURF REINFORCEMENT MAT	TEMPORARY EROSION CONTROL SEEDING	TEMPORARY DITCH CHECKS	AGGREGATE DITCH CHECKS	PERIMETER EROSION BARRIER	INLET PIPE PROTECTION	INLET FILTERS	TEMPORARY EROSION CONTROL BLANKET	STABILIZED CONSTRUCTION ENTRANCE	SEDIMENT CONTROL, SILT CURTAIN
			(ACRE)	(SQ YD)	(POUND)	(FOOT)	(TON)	(FOOT)	(EACH)	(EACH)	(SQ YD)	(SQ YD)	(EACH)
Start STA.	Stop STA.												
Sheet 1	I-39 Wide - Plan 5												
2616+00.00	2630+00.00	LT	0.00	0.00	0.00	0.00	0.0	0.00	0	0	0.00	0.00	0.00
2616+00.00	2630+00.00	RT	0.26	0.00	26.03	0.00	0.0	937.72	1	1	1259.90	112.00	0.00
Sheet 2	I-39 Wide - Plan 6												
2630+00.00	2644+00.00	LT	0.00	0.00	0.00	0.00	0.0	0.00	0	0	0.00	112.00	0.00
2630+00.00	2644+00.00	RT	0.83	0.00	83.09	0.00	0.0	1464.66	1	8	4021.66	112.00	0.00
Sheet 3	I-39 Wide - Plan 7												
2644+00.00	2659+00.00	LT	0.00	0.00	0.00	0.00	0.0	0.00	0	0	0.00	0.00	0.00
2644+00.00	2659+00.00	RT	1.11	0.00	110.85	0.00	0.0	41.55	2	5	5365.34	224.00	0.00
Sheet 4	I-39 Wide - Plan 8												
2659+00.00	2674+00.00	LT	0.00	0.00	0.00	0.00	0.0	0.00	0	0	0.00	0.00	0.00
2659+00.00	2674+00.00	RT	0.42	0.00	41.85	0.00	0.0	51.16	0	4	2025.35	224.00	0.00
Sheet 5	I-39 Wide - Plan 9												
2674+00.00	2689+00.00	LT	0.00	0.00	0.00	0.00	0.0	0.00	0	0	0.00	0.00	0.00
2674+00.00	2689+00.00	RT	0.47	0.00	47.00	0.00	0.0	21.87	0	3	2274.65	0.00	0.00
Sheet 6	I-39 Wide - Plan 10												
2689+00.00	2704+00.00	LT	0.00	0.00	0.00	0.00	0.0	0.00	0	0	0.00	0.00	0.00
2689+00.00	2704+00.00	RT	0.08	0.00	8.40	0.00	0.00	28.37	0	1	406.34	112.00	0.00
Sheet 7	I-39 Wide - Plan 11												
2704+00.00	2718+00.00	LT	0.00	0.00	0.00	0.00	0.0	0.00	0	0	0.00	0.00	0.00
2704+00.00	2718+00.00	RT	0.85	0.00	85.10	0.00		106.32	0	4	4118.97	0.00	0.00
Sheet 8	I-39 Wide - Plan 12												
2718+00.00	2733+00.00	LT	0.26	0.00	25.53	0.00	0.0	339.93	0	3	1235.85	224.00	0.00
TOTAL			4.28	0.00	427.85	0.00	0.00	2991.58	4	29	20708.06	1008.00	0.00
ADJUSTED TOTAL			4.50	0.00	428.00	0.00	0.00	2292.00	4	29	20709.00	1008.00	0.00

MODEL: Schedules-18 [Sheet]
FILE NAME: c:\pwworld\benesch projects\projects\d0173723\D284C24-Mt-sht-Schedules.dgn

STAGE 1

PAY LIMIT			25000750	25100900	28000250	28000305	28000315	28000400	28000500	28000510	28001100	Z0013797	Z0023201
			MOWING	TURF REINFORCEMENT MAT	TEMPORARY EROSION CONTROL SEEDING	TEMPORARY DITCH CHECKS	AGGREGATE DITCH CHECKS	PERIMETER EROSION BARRIER	INLET PIPE PROTECTION	INLET FILTERS	TEMPORARY EROSION CONTROL BLANKET	STABILIZED CONSTRUCTION ENTRANCE	SEDIMENT CONTROL, SILT CURTAIN
			(ACRE)	(SQ YD)	(POUND)	(FOOT)	(TON)	(FOOT)	(EACH)	(EACH)	(SQ YD)	(SQ YD)	(EACH)
Start STA.	Stop STA.												
Plan 5													
2616+00	2630+00	LT	0.04	0.00	3.85	76.18	0.00	992.41	1	1	186.50	112.00	0.00
2616+00	2630+00	RT	0.00	0.00	0.00	0	0.00	0.00	0	0	0.00	0.00	0.00
Plan 6													
2630+00	2644+00	LT	2.12	2298.69	212.44	39.93	0.00	1348.00	2	4	7983.46	112.00	0.00
2630+00	2644+00	RT	0.57	1120.32	57.05	0.00	0.00	344.94	0	1	1640.83	0.00	0.00
Plan 7													
2644+00	2659+00	LT	3.25	3695.55	325.05	81.79	0.00	1505.48	2	12	12037.00	112.00	1.00
2644+00	2659+00	RT	0.31	1038.85	30.54	0.00	0.00	0.00	1	6	1478.13	0.00	0.00
Plan 8													
2659+00	2674+00	LT	1.54	1225.92	154.05	24.00	0.00	1400.43	2	2	6230.25	224.00	0.00
2659+00	2674+00	RT	0.00	0.00	0.00	0.00	0.00	0.00	0	7	0.00	0.00	0.00
Plan 9													
2674+00	2689+00	LT	1.59	4180.95	159.31	36.00	0.00	1118.02	0	2	3529.80	112.00	0.00
2674+00	2689+00	RT	0.00	0.00	0.00	0.00	0.00	0.00	0	1	0.00	0.00	0.00
Plan 10													
2689+00	2704+00	LT	1.61	744.49	161.00	68.00	0.00	1423.82	0	2	7047.90	112.00	0.00
2689+00	2704+00	RT	0.00	0.00	0.00	0.00	0.00	0.00	0	4	0.00	0.00	0.00
Plan 11													
2704+00	2718+00	LT	0.10	0.00	9.97	12.00	0.00	1387.70	0	3	4341.04	112.00	1.00
2704+00	2718+00	RT	0.00	0.00	0.00	0.00	0.00	0.00	0	3	0.00	0.00	0.00
Plan 12													
2718+00	2733+00	LT	0.02	0.00	2.19	0.00	0.00	409.16	0	0	952.90	112.00	0.00
2718+00	2733+00	RT	0.01	0.00	1.10	0.00	0.00	405.11	0	0	477.05	224.00	0.00
Plan 13													
2733+00	2748+00	LT	0.00	0.00	0.00	0.00	0.00	0.00	0	0	0.00	0.00	0.00
TOTAL			11.21	14304.77	1120.60	337.90	0.00	10508.81	8.00	48.00	46101.13	1232.00	2.00
ADJUSTED TOTAL			11.25	14305.00	1121.00	338.00	0.00	10509.00	8.00	48.00	46101.00	1232.00	2.00

MODEL: Schedules-19 [Sheet]
FILE NAME: c:\pwworkf\benesch projects\projects\d0173723\D264C24-MI-sht-Schedules.dgn

benesch
Alfred Benesch & Company
35 W Wacker Drive, Suite 3300
Chicago, Illinois 60601
312-565-0450 Job No. 10800.00

USER NAME = agibson	DESIGNED - A. GIBSON	REVISED -	
	DRAWN - J.MAJCHER	REVISED -	
PLOT SCALE = $SCALE$	CHECKED - J.TARDY	REVISED -	
PLOT DATE = 2/6/2025	DATE - 02/14/2025	REVISED -	

STATE OF ILLINOIS
DEPARTMENT OF TRANSPORTATION

SCHEDULE OF QUANTITIES

SCALE: 1"=1'-0" | SHEET 19 OF 39 SHEETS | STA. TO STA.

F.A.I RTE.	SECTION	COUNTY	TOTAL SHEETS	SHEET NO.
*	(201-3)R & (4-1.5)R	WINNEBAGO	1685	67
		CONTRACT NO. 64C24		
	ILLINOIS	FED. AID PROJECT		

* FAI ROUTE 39 (I-39) & FAP 301 (US 20)

NOISE WALLS - STAGE 1

PAY LIMIT			25000750	25100900	28000250	28000305	28000315	28000400	28000510	28001100	X0326806	Z0013797	Z0023201
			MOWING	TURF REINFORCEMENT MAT	TEMPORARY EROSION CONTROL SEEDING	TEMPORARY DITCH CHECKS	AGGREGATE DITCH CHECKS	PERIMETER EROSION BARRIER	INLET FILTERS	TEMPORARY EROSION CONTROL BLANKET	WASHOUT BASIN	STABILIZED CONSTRUCTION ENTRANCE	SEDIMENT CONTROL, SILT CURTAIN
			(ACRE)	(SQ YD)	(POUND)	(FOOT)	(TON)	(FOOT)	(EACH)	(SQ YD)	(L SUM)	(SQ YD)	(EACH)
Start STA.	Stop STA.												
RAMP DB-1													
328+00	343+00	LT	0.00	0.00	0.00	0.00	0.00	0.00	0	0.00	0.00	0.00	0.00
328+00	343+00	RT	1.21	0.00	121.32	0.00	0.00	1330.06	0	5895.66	0.00	0.00	0.00
RAMP DB-2													
30+00	45+00	LT	0.00	0.00	0.00	0.00	0.00	0.00	0	0.00	0.00	0.00	0.00
30+00	45+00	RT	1.23	0.00	122.74	0.00	0.00	1466.66	0	5940.70	1.00	112.00	0.00
RAMP DB-3													
45+00	60+00	LT	0.00	0.00	0.00	0.00	0.00	0.00	0	0.00	0.00	0.00	0.00
45+00	60+00	RT	0.85	0.00	84.99	0.00	0.00	5203.85	0	3898.83	0.00	0.00	0.00
RAMP DB-4													
60+00	75+00	LT	0.00	0.00	0.00	0.00	0.00	0.00	0	0.00	0.00	0.00	0.00
60+00	75+00	RT	1.36	0.00	136.16	0.00	0.00	1471.18	0	6224.30	1.00	112.00	0.00
RAMP DB-5													
75+00	90+00	LT	0.00	0.00	0.00	0.00	0.00	0.00	0	0.00	0.00	0.00	0.00
75+00	90+00	RT	0.95	0.00	94.53	0.00	0.00	764.99	0	4575.38	1.00	112.00	0.00
RAMP DA													
64+00	78+00	LT	0.00	0.00	0.00	0.00	0.00	0.00	0	0.00	0.00	0.00	0.00
64+00	78+00	RT	0.90	0.00	90.12	34.00	0.00	909.35	3	4361.92	1.00	112.00	0.00
RAMP DA-1													
78+00	92+00	LT	0.00	0.00	0.00	0.00	0.00	0.00	0	0.00	0.00	0.00	0.00
TOTAL			8.30	0.00	829.74	209.57	0.00	12070.36	3.00	39602.32	5.00	1981.68	0.00
ADJUSTED TOTAL			8.50	0.00	830.00	209.50	0.00	12070.50	3.00	39602.50	5.00	1981.75	0.00

STAGE 1B

PAY LIMIT			25000750	25100900	28000250	28000305	28000315	28000400	28000500	28000510	28001100	Z0013797	Z0023201
			MOWING	TURF REINFORCEMENT MAT	TEMPORARY EROSION CONTROL SEEDING	TEMPORARY DITCH CHECKS	AGGREGATE DITCH CHECKS	PERIMETER EROSION BARRIER	INLET PIPE PROTECTION	INLET FILTERS	TEMPORARY EROSION CONTROL BLANKET	STABILIZED CONSTRUCTION ENTRANCE	SEDIMENT CONTROL, SILT CURTAIN
			(ACRE)	(SQ YD)	(POUND)	(FOOT)	(TON)	(FOOT)	(EACH)	(EACH)	(SQ YD)	(SQ YD)	(EACH)
Start STA.	Stop STA.												
Plan 11													
2704+00	2718+00	LT	1.09	0.00	109.07	20	0.00	563.99	0	5	5279.10	224.00	1.00
2704+00	2718+00	RT	0.08	0.00	8.34	0.00	0.00	0.00	0	3	403.55	0.00	0.00
						8.00							
Plan 12													
2718+00	2732+35	LT	1.25	541.77	125.24	0.00	0.00	1190.39	0	4	5519.69	224.00	0.00
TOTAL			2.44	541.77	244.09	28.00	0.00	1817.39	0.00	15.00	11272.42	560.00	1.00
ADJUSTED TOTAL			2.50	542.00	244.00	28.00	0.00	1817.00	0.00	15.00	11272.00	560.00	1.00

MODEL: Schedules-20 [Sheet]
FILE NAME: c:\pwworkir\benesch projects\projects\d0173723\D264C24-NL-sht-Schedules.dgn

benesch
Alfred Benesch & Company
35 W Wacker Drive, Suite 3200
Chicago, Illinois 60601
312-565-6450 Job No. 10806.00

USER NAME = agibson	DESIGNED - A. GIBSON	REVISED -	
	DRAWN - J.MAJCHER	REVISED -	
PLOT SCALE = $SCALE$	CHECKED - J.TARDY	REVISED -	
PLOT DATE = 2/6/2025	DATE - 02/14/2025	REVISED -	

STATE OF ILLINOIS
DEPARTMENT OF TRANSPORTATION

SCHEDULE OF QUANTITIES

SCALE: 1"=1'-0" | SHEET 20 OF 39 SHEETS | STA. TO STA.

F.A.I RTE.	SECTION	COUNTY	TOTAL SHEETS	SHEET NO.
*	(201-3)R & (4-1.5)R	WINNEBAGO	1685	68
		CONTRACT NO. 64C24		
	ILLINOIS	FED. AID PROJECT		

* FAI ROUTE 39 (I-39) & FAP 301 (US 20)

STAGE 1C

PAY LIMIT			25000750	25100900	28000250	28000305	28000315	28000400	28000500	28000510	28001100	Z0013797	Z0023201
			MOWING	TURF REINFORCEMENT MAT	TEMPORARY EROSION CONTROL SEEDING	TEMPORARY DITCH CHECKS	AGGREGATE DITCH CHECKS	PERIMETER EROSION BARRIER	INLET PIPE PROTECTION	INLET FILTERS	TEMPORARY EROSION CONTROL BLANKET	STABILIZED CONSTRUCTION ENTRANCE	SEDIMENT CONTROL, SILT CURTAIN
			(ACRE)	(SQ YD)	(POUND)	(FOOT)	(TON)	(FOOT)	(EACH)	(EACH)	(SQ YD)	(SQ YD)	(EACH)
Start STA.	Stop STA.												
Plan 11													
2704+00	2718+00	LT	0.57	0.00	56.75	8	0.00	290.01	0	5	2746.63	0.00	1.00
2704+00	2718+00	RT	0.00	0.00	0.00	0.00	0.00	0.00	0	1	0.00	0.00	0.00
Plan 12													
2718+00	2733+00	LT	1.38	541.21	138.17	0	0.00	1629.98	0	5	6148.89	224.00	0.00
TOTAL			1.95	541.21	194.92	8.00	0.00	1919.99	0.00	14.00	8895.52	224.00	1.00
ADJUSTED TOTAL			2.00	541.25	195.00	8.00	0.00	1920.00	0.00	14.00	8896.00	224.00	1.00

STAGE 2

PAY LIMIT			25000750	25100900	28000250	28000305	28000315	28000400	28000500	28000510	28001100	Z0013797	Z0023201
			MOWING	TURF REINFORCEMENT MAT	TEMPORARY EROSION CONTROL SEEDING	TEMPORARY DITCH CHECKS	AGGREGATE DITCH CHECKS	PERIMETER EROSION BARRIER	INLET PIPE PROTECTION	INLET FILTERS	TEMPORARY EROSION CONTROL BLANKET	STABILIZED CONSTRUCTION ENTRANCE	SEDIMENT CONTROL, SILT CURTAIN
			(ACRE)	(SQ YD)	(POUND)	(FOOT)	(TON)	(FOOT)	(EACH)	(EACH)	(SQ YD)	(SQ YD)	(EACH)
Start STA.	Stop STA.												
Plan 5													
2616+00	2630+00	LT	0.00	0.00	0.00	0	0.00	0.00	0	10	0.00	0.00	0.00
2616+00	2630+00	RT	0.16	0.00	15.59	0	0.00	267.86	0	24	754.57	224.00	0.00
Plan 6													
2630+00	2644+00	LT	0.00	0.00	0.00	0	0.00	0.00	0	8	0.00	0.00	0.00
2630+00	2644+00	RT	0.09	271.83	9.23	0	0.00	160.65	0	25	145.50	112.00	0.00
Plan 7													
2644+00	2659+00	LT	0.00	0.00	0.00	0	0.00	0.00	0	10	0.00	0.00	1.00
2644+00	2659+00	RT	0.00	0.00	0.00	0	0.00	0.00	1	25	0.00	0.00	0.00
Plan 8													
2659+00	2674+00	LT	0.00	0.00	0.00	0	0.00	0.00	0	20	0.00	0.00	0.00
2659+00	2674+00	RT	0.00	0.00	0.00	0	0.00	0.00	0	28	0.00	0.00	0.00
Plan 9													
2674+00	2689+00	LT	0.00	0.00	0.00	0	0.00	0.00	0	7	0.00	0.00	0.00
2674+00	2689+00	RT	0.00	0.00	0.00	0	0.00	0.00	1	10	0.00	0.00	0.00
Plan 10													
2689+00	2704+00	LT	0.00	0.00	0.00	0	0.00	0.00	0	13	0.00	0.00	0.00
2689+00	2704+00	RT	0.53	0.00	52.67	0	0.00	414.73	6	19	2549.14	0.00	0.00
Plan 11													
2704+00	2718+00	LT	0.00	0.00	0.00	0	0.00	0.00	0	19	0.00	0.00	1.00
2704+00	2718+00	RT	0.00	0.00	0.00	0	0.00	0.00	0	21	0.00	0.00	0.00
Plan 12													
2718+00	2733+00	LT	0.00	0.00	0.00	0	0.00	0.00	0	7	0.00	0.00	0.00
2718+00	2733+00	RT	0.15	0.00	15.17	0	0.00	252.37	0	13	734.41	224.00	0.00
TOTAL			0.93	271.83	92.66	0.00	0.00	1095.61	8.00	259.00	4183.62	560.00	2.00
ADJUSTED TOTAL			1.00	272.00	93.00	0.00	0.00	1096.00	8.00	259.00	4183.62	560.00	2.00

STAGE 3

PAY LIMIT			25000750	25100900	28000250	28000305	28000315	28000400	28000500	28000510	28001100	Z0013797	Z0023201
			MOWING	TURF REINFORCEMENT MAT	TEMPORARY EROSION CONTROL SEEDING	TEMPORARY DITCH CHECKS	AGGREGATE DITCH CHECKS	PERIMETER EROSION BARRIER	INLET PIPE PROTECTION	INLET FILTERS	TEMPORARY EROSION CONTROL BLANKET	STABILIZED CONSTRUCTION ENTRANCE	SEDIMENT CONTROL, SILT CURTAIN
			(ACRE)	(SQ YD)	(POUND)	(FOOT)	(TON)	(FOOT)	(EACH)	(EACH)	(SQ YD)	(SQ YD)	(EACH)
Start STA.	Stop STA.												
Plan 5													
2616+00	2630+00	LT	0.00	0.00	0.00	155.701	0.00	0.00	0	0	0.00	0.00	0.00
2616+00	2630+00	RT	1.53	0.00	152.69	106.79	0.00	1114.38	0	5	7390.22	112.00	0.00
Plan 6													
2630+00	2644+00	LT	0.00	0.00	0.00	165	0.00	0.00	0	0	0.00	0.00	0.00
2630+00	2644+00	RT	2.15	2943.11	214.61	139.15	12.00	1376.83	1	8	7443.97	112.00	0.00
Plan 7													
2644+00	2659+00	LT	0.00	0.00	0.00	88	0.00	0.00	0	0	0.00	0.00	1.00
2644+00	2659+00	RT	2.80	8248.55	279.62	66	46.90	1612.10	1	13	5285.00	0.00	0.00
Plan 8													
2659+00	2674+00	LT	0.00	0.00	0.00	154.00	0.00	0.00	0	0	0.00	0.00	0.00
2659+00	2674+00	RT	1.97	0.00	197.49	44.00	0.00	1199.80	0	6	9558.29	224.00	0.00
Plan 9													
2674+00	2689+00	LT	0.00	0.00	0.00	77.00	0.00	0.00	0	0	0.00	0.00	0.00
2674+00	2689+00	RT	2.48	3077.06	248.00	36.00	0.00	5842.09	0	10	8926.24	112.00	0.00
Plan 10													
2689+00	2704+00	LT	0.00	0.00	0.00	154	0.00	0.00	0	0	0.00	0.00	0.00
2689+00	2704+00	RT	2.76	0.00	276.12	44.00	24.00	1243.20	1	11	12238.83	224.00	0.00
Plan 11													
2704+00	2718+00	LT	0.00	0.00	0.00	143	0.00	0.00	0	0	0.00	0.00	1.00
2704+00	2718+00	RT	2.67	0.00	266.91	28.00	4.00	2362.88	1	17	12452.18	194.00	0.00
Plan 12													
2718+00	2733+00	LT	0.00	0.00	0.00	0	0.00	0.00	0	1	0.00	0.00	0.00
2718+00	2733+00	RT	3.53	0.00	352.82	0	0.00	1870.49	2	4	11824.76	219.68	0.00
Plan 13													
2733+00	2748+00	LT	0.00	0.00	0.00	0.00	0.00	0.00	0	0	0.00	0.00	0.00
2733+00	2748+00	RT	0.67	0.00	66.89	0.00	0.00	1391.49	1	0	3235.78	224.00	0.00
TOTAL			20.55	14268.72	2055.14	1400.64	86.90	18013.25	7.00	75.00	78355.28	1421.68	2.00
ADJUSTED TOTAL			20.50	14268.75	2055.00	1400.50	87.00	18013.50	7.00	75.00	78355.50	1421.75	2.00

STAGE 3B

PAY LIMIT			25000750	25100900	28000250	28000305	28000315	28000400	28000500	28000510	28001100	Z0013797	Z0023201
			MOWING	TURF REINFORCEMENT MAT	TEMPORARY EROSION CONTROL SEEDING	TEMPORARY DITCH CHECKS	AGGREGATE DITCH CHECKS	PERIMETER EROSION BARRIER	INLET PIPE PROTECTION	INLET FILTERS	TEMPORARY EROSION CONTROL BLANKET	STABILIZED CONSTRUCTION ENTRANCE	SEDIMENT CONTROL, SILT CURTAIN
			(ACRE)	(SQ YD)	(POUND)	(FOOT)	(TON)	(FOOT)	(EACH)	(EACH)	(SQ YD)	(SQ YD)	(EACH)
Start STA.	Stop STA.												
Plan 11													
2704+00	2718+00	LT	0.00	0.00	0.00	0	0.00	0.00	0	0	0.00	0.00	1.00
2704+00	2718+00	RT	0.21	0.00	20.93	0	0.00	138.47	0	8	9119.19	224.00	0.00
Plan 12													
2718+00	2733+00	LT	0.15	0.00	15.03	0	0.00	316.21	0	1	727.34	112.00	0.00
2718+00	2733+00	RT	0.09	0.00	9.13	0	0.00	207.21	0	1	442.10	112.00	0.00
STOCKPILE			9.74	0.00	973.90	143.00	0.00	0.00	0	0	47136.78	112.00	0.00
TOTAL			10.19	0.00	1019.00	143.00	0.00	661.88	0.00	10.00	57425.41	560.00	1.00
ADJUSTED TOTAL			10.25	0.00	1019.00	143.00	0.00	662.00	0.00	10.00	57425.00	560.00	1.00

EXISTING SIGNS (REMOVALS & REINSTALLATIONS)

LOCATION	SIGN CODE	STATION	LT/RT	DESCRIPTION	MOUNTING TYPE	SIGN PANEL WIDTH	SIGN PANEL HEIGHT	SIGN PANEL AREA	72400310 REMOVE SIGN PANEL - TYPE 1	72400320 REMOVE SIGN PANEL - TYPE 2	72400330 REMOVE SIGN PANEL - TYPE 3	73600100 REMOVE OH SIGN STRUCTURE - SPAN	73700100 REMOVE GROUND MOUNTED SIGN SUPPORT	73700200 REMOVE CONCRETE FOUNDATION - GROUND MOUNT	73700300 REMOVE CONCRETE FOUNDATION - OVERHEAD	73800005 REMOVE STRUCTURAL STEEL SUPPORT FOR OVERHEAD SIGN STRUCTURE - SPAN	X7200075 REMOVE AND REINSTALL SIGN PANEL	REMARKS
(ROAD)	(MUTCD or IDOT)	(STA)				(INCH)	(INCH)	(SQ FT)	(SQ FT)	(SQ FT)	(SQ FT)	(EACH)	(EACH)	(EACH)	(EACH)	(EACH)	(SQFT)	
I-39 / US 20	W9-1	2601+30	RT	RIGHT LANE ENDS	WOOD POST	48.0	48.0	16.0		16.0								
I-39 / US 20	2E-23	2601+30	-	INTERCHANGE ADVANCED	OVERHEAD STRUCTURE	258.0	174.0	311.8			311.8							
I-39 / US 20	W9-1 CUSTOM	2603+00	-	LANE ENDS	OVERHEAD STRUCTURE	126.0	78.0	68.3			68.3							
I-39 / US 20	W4-2R	2606+14	RT	MERGE	WOOD POST	48.0	48.0	16.0		16.0								
I-39 / US 20	M3-1	2610+59	RT	NORTH (BLUE)	WOOD POST	36.0	18.0	4.5									4.5	
I-39 / US 20	M3-1	2610+59	RT	NORTH (WHITE)	WOOD POST	36.0	18.0	4.5									4.5	
I-39 / US 20	M3-2	2610+59	RT	EAST (WHITE)	WOOD POST	36.0	18.0	4.5									4.5	
I-39 / US 20	M1-1	2610+59	RT	I-39 (BLUE)	WOOD POST	36.0	36.0	9.0									9.0	
I-39 / US 20	M1-4	2610+59	RT	US 51 (WHITE)	WOOD POST	36.0	36.0	9.0									9.0	
I-39 / US 20	M1-4	2610+59	RT	US 20 (WHITE)	WOOD POST	36.0	36.0	9.0									9.0	
I-39 / US 20	2E-23	2614+00	LT	INTERCHANGE EXIT DIRECTION	BREAK-AWAY STEEL	162.0	108.0	121.5			121.5		2	2				I-39 US 51 SOUTH DIAGONAL ARROW
I-39 / US 20	2E-23	2621+35	LT	INTERCHANGE EXIT DIRECTION	BREAK-AWAY STEEL	126.0	90.0	78.8			78.8		2	2				I-39 US 51 SOUTH
I-39 / US 20	CUSTOM	2622+75	LT	INTERCHANGE EXIT DIRECTION	OVERHEAD STRUCTURE	240.0	168.0	280.0				1			4	2		
I-39 / US 20	D10-4	2628+00	LT	ENHANCED REFERENCE LOCATION	TELESCOPING STEEL	18.0	54.0	6.8									6.8	SOUTH I-39 MILE 120
I-39 / US 20	D10-4	2628+00	RT	ENHANCED REFERENCE LOCATION	TELESCOPING STEEL	18.0	54.0	6.8									6.8	NORTH I-39 MILE 120
I-39 / US 20	-	2631+79	RT	ATTRACTIONS	BREAK-AWAY STEEL	240.0	72.0	120.0			120.0		2	2				
I-39 / US 20	M3-3	2632+56	RT	SOUTH (BLUE)	WOOD POST	36.0	18.0	4.5	4.5									
I-39 / US 20	M1-1	2632+56	RT	I-39 (BLUE)	WOOD POST	36.0	36.0	9.0	9.0									
I-39 / US 20	M5-6	2632+56	RT	RIGHT LANE	WOOD POST	36.0	24.0	6.0	6.0									
I-39 / US 20	2E-23	2635+29	-	INTERCHANGE EXIT DIRECTION	OVERHEAD STRUCTURE	96.0	144.0	96.0			-	1			4	2		US 20 WEST
I-39 / US 20	2E-23	2635+29	-	INTERCHANGE EXIT DIRECTION	OVERHEAD STRUCTURE	120.0	144.0	120.0			-							I-39 US 51 SOUTH
I-39 / US 20	D10-5	2637+75	RT	INTERMEDIATE ENHANCED REFERENCE LOCATION	TELESCOPING STEEL	18.0	60.0	7.5									7.5	NORTH I-39 MILE 120.2
I-39 / US 20	D10-5	2637+76	LT	INTERMEDIATE ENHANCED REFERENCE LOCATION	TELESCOPING STEEL	18.0	60.0	7.5									7.5	SOUTH I-39 MILE 120.2
I-39 / US 20	D10-5	2648+18	LT	INTERMEDIATE ENHANCED REFERENCE LOCATION	TELESCOPING STEEL	18.0	60.0	7.5									7.5	SOUTH I-39 MILE 120.4
I-39 / US 20	D10-5	2648+63	RT	INTERMEDIATE ENHANCED REFERENCE LOCATION	TELESCOPING STEEL	18.0	60.0	7.5									7.5	NORTH I-39 MILE 120.4
I-39 / US 20	-	2654+06	RT	FOOD	BREAK-AWAY STEEL	240.0	120.0	200.0			200.0		2	2				
I-39 / US 20	D10-5	2659+11	LT	INTERMEDIATE ENHANCED REFERENCE LOCATION	TELESCOPING STEEL	18.0	60.0	7.5									7.5	SOUTH I-39 MILE 120.6
I-39 / US 20	D10-5	2659+27	RT	INTERMEDIATE ENHANCED REFERENCE LOCATION	TELESCOPING STEEL	18.0	60.0	7.5									7.5	NORTH I-39 MILE 120.6
I-39 / US 20	-	2662+17	RT	GAS	BREAK-AWAY STEEL	120.0	108.0	90.0			90.0		2	2				
I-39 / US 20	D3-1	2664+00	RT	STREET NAME	WOOD POST	84.0	18.0	10.5		10.5								PERRYVILLE RD
I-39 / US 20	D3-1	2664+60	LT	STREET NAME	WOOD POST	84.0	18.0	10.5		10.5								PERRYVILLE RD
I-39 / US 20	2E-22	2668+97	LT	INTERCHANGE ADVANCED	BREAK-AWAY STEEL	144.0	108.0	108.0			108.0		2	2				I-39 US 51 SOUTH
I-39 / US 20	D10-5	2669+31	LT	INTERMEDIATE ENHANCED REFERENCE LOCATION	TELESCOPING STEEL	18.0	60.0	7.5									7.5	SOUTH I-39 MILE 120.8
I-39 / US 20	D10-5	2669+41	RT	INTERMEDIATE ENHANCED REFERENCE LOCATION	TELESCOPING STEEL	18.0	60.0	7.5									7.5	NORTH I-39 MILE 120.8
I-39 / US 20	E6-1a	2672+16	-	PULL THROUGH	OVERHEAD STRUCTURE	196.0	108.0	147.0			-	1			4	2		I-90 TOLL I-39 US 51 TOLL NORTH
I-39 / US 20	2E-22	2672+16	-	INTERCHANGE ADVANCED	OVERHEAD STRUCTURE	144.0	144.0	144.0			-							US 20 EAST
I-39 / US 20	2E-23	2677+63	LT	INTERCHANGE SEQUENCE	BREAK-AWAY STEEL	132.0	48.0	44.0			44.0		2	2				
I-39 / US 20	D10-4	2680+26	LT	ENHANCED REFERENCE LOCATION	TELESCOPING STEEL	18.0	54.0	6.8									6.8	SOUTH I-39 MILE 121
I-39 / US 20	D10-4	2680+26	RT	ENHANCED REFERENCE LOCATION	TELESCOPING STEEL	18.0	54.0	6.8									6.8	NORTH I-39 MILE 121
I-39 / US 20	2E-22	2680+91	RT	INTERCHANGE ADVANCED	BREAK-AWAY STEEL	144.0	108.0	108.0			108.0		2	2				US 20 EAST
I-39 / US 20	-	2689+70	-	DYNAMIC MESSAGE BOARD	OVERHEAD STRUCTURE	300.0	60.0	125.0				1			4	2		
I-39 / US 20	D10-5	2690+53	LT	INTERMEDIATE ENHANCED REFERENCE LOCATION	TELESCOPING STEEL	18.0	60.0	7.5									7.5	SOUTH I-39 MILE 121.2
I-39 / US 20	D10-5	2690+60	RT	INTERMEDIATE ENHANCED REFERENCE LOCATION	TELESCOPING STEEL	18.0	60.0	7.5									7.5	NORTH I-39 MILE 121.2
I-39 / US 20	2E-22	2691+30	LT	INTERCHANGE ADVANCED	BREAK-AWAY STEEL	192.0	120.0	160.0			160.0		2	2				USE IL-2 SOUTH
I-39 / US 20	-	2694+47	-	DYNAMIC MESSAGE BOARD	OVERHEAD STRUCTURE	300.0	60.0	125.0										
I-39 / US 20	R2-1	2694+47	LT	SPEED LIMIT - 65	BAND	48.0	60.0	20.0		-		1			4	2		
I-39 / US 20	R2-1102	2694+47	LT	MINIMUM SPEED LIMIT - 45	BAND	48.0	36.0	12.0		-								
I-39 / US 20	CUSTOM	2697+02	RT	TOLLWAY WIDTH RESTRICTION	BREAK-AWAY STEEL	72.0	72.0	36.0			36.0		2	2				

MODEL: Schedules-23 [Sheet]
FILE NAME: c:\pwworld\benesch projects\projects\d0173723\D284C24-MLs-sht-Schedules.dgn

benesch
Alfred Benesch & Company
35 W Wacker Drive, Suite 3300
Chicago, Illinois 60601
312-565-6450 Job No. 10800.00

USER NAME = agibson	DESIGNED - A. GIBSON	REVISED -	
	DRAWN - J.MAJCHER	REVISED -	
PLOT SCALE = $SCALE$	CHECKED - J.TARDY	REVISED -	
PLOT DATE = 2/6/2025	DATE - 02/14/2025	REVISED -	

STATE OF ILLINOIS
DEPARTMENT OF TRANSPORTATION

SCHEDULE OF QUANTITIES

SCALE: 1"=1'-0" | SHEET 23 OF 39 SHEETS | STA. TO STA.

F.A.I RTE.	SECTION	COUNTY	TOTAL SHEETS	SHEET NO.
*	(201-3)R & (4-1.5)R	WINNEBAGO	1685	71
		CONTRACT NO. 64C24		
		ILLINOIS	FED. AID PROJECT	

* FAI ROUTE 39 (I-39) & FAP 301 (US 20)

EXISTING SIGNS (REMOVALS & REINSTALLATIONS)

LOCATION	SIGN CODE	STATION	LT/RT	DESCRIPTION	MOUNTING TYPE	SIGN PANEL WIDTH	SIGN PANEL HEIGHT	SIGN PANEL AREA	72400310 REMOVE SIGN PANEL - TYPE 1	72400320 REMOVE SIGN PANEL - TYPE 2	72400330 REMOVE SIGN PANEL - TYPE 3	73600100 REMOVE OH SIGN STRUCTURE - SPAN	73700100 REMOVE GROUND MOUNTED SIGN SUPPORT	73700200 REMOVE CONCRETE FOUNDATION - GROUND MOUNT	73700300 REMOVE CONCRETE FOUNDATION - OVERHEAD	73800005 REMOVE STRUCTURAL STEEL SUPPORT FOR OVERHEAD SIGN STRUCTURE - SPAN	X7200075 REMOVE AND REINSTALL SIGN PANEL	REMARKS
(ROAD)	(MUTCD or IDOT)	(STA)				(INCH)	(INCH)	(SQ FT)	(SQ FT)	(SQ FT)	(SQ FT)	(EACH)	(EACH)	(EACH)	(EACH)	(EACH)	(SQFT)	
I-39 / US 20	D10-5	2700+94	LT	INTERMEDIATE ENHANCED REFERENCE LOCATION	TELESCOPING STEEL	18.0	60.0	7.5									7.5	SOUTH I-39 MILE 121.4
I-39 / US 20	M3-3	2700+94	LT	SOUTH (BLUE)	WOOD POST	36.0	18.0	4.5	4.5									
I-39 / US 20	M3-3	2700+94	LT	SOUTH (WHITE)	WOOD POST	36.0	18.0	4.5	4.5									
I-39 / US 20	M3-4	2700+94	LT	WEST (WHITE)	WOOD POST	36.0	18.0	4.5	4.5									
I-39 / US 20	M1-1	2700+94	LT	I-39 (BLUE)	WOOD POST	36.0	36.0	9.0	9.0									
I-39 / US 20	M1-4	2700+94	LT	US 51 (WHITE)	WOOD POST	36.0	36.0	9.0	9.0									
I-39 / US 20	M1-4	2700+94	LT	US 20 (WHITE)	WOOD POST	36.0	36.0	9.0	9.0									
I-39 / US 20	D10-5	2701+10	RT	INTERMEDIATE ENHANCED REFERENCE LOCATION	TELESCOPING STEEL	18.0	60.0	7.5									7.5	NORTH I-39 MILE 121.4
I-39 / US 20	2M-2	2703+00	RT	RECREATION GUIDE SIGN	WOOD POST	84.0	48.0	28.0									28.0	WATER PARK
I-39 / US 20	R1-1	2706+32	RT	STOP	WOOD POST	24.0	24.0	4.0	4.0									
I-39 / US 20	D11-1	2706+51	RT	BIKE ROUTE	WOOD POST	24.0	18.0	3.0	3.0									
I-39 / US 20	CUSTOM	2706+51	RT	CUSTOM	WOOD POST	24.0	6.0	1.0	1.0									
I-39 / US 20	W1-2R	2706+51	RT	HORIZONTAL ALIGNMENT	WOOD POST	24.0	24.0	4.0	4.0									
I-39 / US 20	W7-5	2707+07	LT	HILL	WOOD POST	24.0	24.0	4.0	4.0									
I-39 / US 20	W5-5	2707+37	RT	SLIPPERY WHEN WET	WOOD POST	24.0	24.0	4.0	4.0									
I-39 / US 20	OM-3R	2707+87	RT	OBJECT MARKER	WOOD POST	6.0	18.0	0.8	0.8									
I-39 / US 20	W5-5	2708+75	RT	SLIPPERY WHEN WET	WOOD POST	24.0	24.0	4.0	4.0									
I-39 / US 20	R5-1	2709+16	LT	DO NOT ENTER	BAND	30.0	30.0	6.3	6.3									
I-39 / US 20	M4-15	2709+77	RT	TOLL	WOOD POST	36.0	18.0	4.5	4.5									
I-39 / US 20	M1-1	2709+77	RT	I-39 (BLUE)	WOOD POST	36.0	36.0	9.0	9.0									
I-39 / US 20	M1-1	2709+77	RT	I-90 (BLUE)	WOOD POST	36.0	36.0	9.0	9.0									
I-39 / US 20	M5-1	2709+77	RT	ADVANCE TURN ARROW	WOOD POST	36.0	24.0	6.0	6.0									
I-39 / US 20	2E-22	2710+00	RT	INTERCHANGE EXIT DIRECTION	BREAK-AWAY STEEL	120.0	144.0	120.0			120.0		2	2				
I-39 / US 20	D10-5	2711+55	LT	INTERMEDIATE ENHANCED REFERENCE LOCATION	TELESCOPING STEEL	18.0	60.0	7.5									7.5	SOUTH I-39 MILE 121.6
I-39 / US 20	D10-5	2711+76	RT	INTERMEDIATE ENHANCED REFERENCE LOCATION	TELESCOPING STEEL	18.0	60.0	7.5									7.5	NORTH I-39 MILE 121.6
I-39 / US 20	W4-1	2712+11	LT	MERGE	WOOD POST	48.0	48.0	16.0		16.0								
I-39 / US 20	W13-3	2714+08	RT	ADVISORY EXIT RAMP SPEED - 35 MPH	WOOD POST	48.0	60.0	20.0									20.0	
I-39 / US 20	E5-1a	2716+54	RT	EXIT GORE	WOOD POST	78.0	60.0	32.5									32.5	
I-39 / US 20	D10-5	2720+89	LT	INTERMEDIATE ENHANCED REFERENCE LOCATION	TELESCOPING STEEL	18.0	60.0	7.5									7.5	SOUTH I-39 MILE 121.8
I-39 / US 20	D10-5	2722+24	RT	INTERMEDIATE ENHANCED REFERENCE LOCATION	TELESCOPING STEEL	18.0	60.0	7.5									7.5	NORTH I-39 MILE 121.8
I-39 / US 20	W4-3	2731+38	RT	ADDED LANE	WOOD POST	48.0	48.0	16.0									16.0	
I-39 / US 20	D10-4	2731+51	LT	ENHANCED REFERENCE LOCATION	TELESCOPING STEEL	18.0	54.0	6.8									6.8	SOUTH I-39 MILE 122
I-39 / US 20	D10-4	2731+54	RT	ENHANCED REFERENCE LOCATION	TELESCOPING STEEL	18.0	54.0	6.8									6.8	NORTH I-39 MILE 122
I-39 / US 20	W13-3	2738+85	LT	ADVISORY EXIT RAMP SPEED - 35 MPH	WOOD POST	48.0	60.0	20.0									20.0	
I-39 / US 20	2E-23	2746+00	RT	INTERCHANGE EXIT DIRECTION	OVERHEAD STRUCTURE	240.0	162.0	270.0			270.0							TOLL I-90 WEST, I-39 US 51
I-39 / US 20	2E-23	2746+00	RT	INTERCHANGE EXIT DIRECTION	OVERHEAD STRUCTURE	180.0	162.0	202.5			202.5							I-90 TOLL EAST
I-39 / US 20	W13-3	2746+00	RT	ADVISORY EXIT RAMP SPEED - 50 MPH	BAND	48.0	60.0	20.0		20.0								
I-39 / US 20	W13-3	2746+00	RT	ADVISORY EXIT RAMP SPEED - 50 MPH	BAND	48.0	60.0	20.0		20.0								
I-39 / US 20	E5-1	2750+34	RT	EXIT GORE	WOOD POST	72.0	60.0	30.0			30.0							
I-39 / US 20	W4-1	2756+24	LT	MERGE	WOOD POST	48.0	48.0	16.0		16.0								
HARRISON AVE	E11-2	152+25	LT	LEFT	BREAK-AWAY STEEL	36.0	18.0	4.5					2	2			4.5	
HARRISON AVE	2E-23	152+25	LT	INTERCHANGE EXIT DIRECTION	BREAK-AWAY STEEL	216.0	84.0	126.0									126.0	I-39 US 51 TOLL NORTH I-90 TOLL
					SUBTOTALS				119.5	125.0	2,068.8	5.0	24.0	24.0	20.0	10.0	448.0	
					TOTALS				120	125	2,069	5	24	24	20	10	448	

MODEL: Schedules-24 [Sheet]
FILE NAME: c:\pwworkl\benesch projects\projects\d0173723\D264C24-MLs-sht-Schedules.dgn

benesch
Alfred Benesch & Company
35 W Wacker Drive, Suite 3300
Chicago, Illinois 60601
312-565-0450 Job No. 10800.00

USER NAME = agibson	DESIGNED - A. GIBSON	REVISED -	
	DRAWN - J.MAJCHER	REVISED -	
PLOT SCALE = $SCALE$	CHECKED - J.TARDY	REVISED -	
PLOT DATE = 2/6/2025	DATE - 02/14/2025	REVISED -	

STATE OF ILLINOIS
DEPARTMENT OF TRANSPORTATION

SCHEDULE OF QUANTITIES

SCALE: 1"=1'-0" | SHEET 24 OF 39 SHEETS | STA. TO STA.

F.A.I RTE.	SECTION	COUNTY	TOTAL SHEETS	SHEET NO.
*	(201-3)R & (4-1.5)R	WINNEBAGO	1685	72
		CONTRACT NO. 64C24		
		ILLINOIS	FED. AID PROJECT	

* FAI ROUTE 39 (I-39) & FAP 301 (US 20)

PROPOSED GROUND MOUNTED SIGNS

LOCATION (ROAD)	SIGN CODE (MUTCD or IDOT)	STATION (STA)	LT/RT	DESCRIPTION	MOUNTING TYPE	SIGN PANEL WIDTH (INCH)	SIGN PANEL HEIGHT (INCH)	SIGN PANEL AREA (SQ FT)	POST ONE LENGTH (FOOT)	POST TWO LENGTH (FOOT)	72000100 SIGN PANEL - TYPE 1 (SQFT)	72000200 SIGN PANEL - TYPE 2 (SQFT)	72000300 SIGN PANEL - TYPE 3 (SQFT)	72700100 STRUCTURAL STEEL SIGN SUPPORT BREAKAWAY WIDE FLANGE (POUND)	72800100 TELESCOPING STEEL SIGN SUPPORT (FOOT)	73000100 WOOD SIGN SUPPORT (FOOT)	73400100 CONCRETE FOUNDATION (CU YD)	REMARKS
I-39 / US 20	M3-1	2612+00	RT	NORTH (BLUE)	WOOD POST	36.0	18.0	4.5										
I-39 / US 20	M3-1	2612+00	RT	NORTH (WHITE)	WOOD POST	36.0	18.0	4.5										
I-39 / US 20	M3-2	2612+00	RT	EAST (WHITE)	WOOD POST	36.0	18.0	4.5	17.0	19.0						36		
I-39 / US 20	M1-1	2612+00	RT	I-39 (BLUE)	WOOD POST	36.0	36.0	9.0										
I-39 / US 20	M1-4	2612+00	RT	US 51 (WHITE)	WOOD POST	36.0	36.0	9.0										
I-39 / US 20	M1-4	2612+00	RT	US 20 (WHITE)	WOOD POST	36.0	36.0	9.0										
I-39 / US 20	D10-4	2624+12	LT	ENHANCED REFERENCE LOCATION	TELESCOPING STEEL	18.0	54.0	6.8	12.0						17			SOUTH I-39 MILE 120
I-39 / US 20	D10-4	2624+12	RT	ENHANCED REFERENCE LOCATION	TELESCOPING STEEL	18.0	54.0	6.8	12.0						17			NORTH I-39 MILE 120
I-39 / US 20	-	2628+50	RT	ATTRACTIONS	BREAK-AWAY STEEL	240.0	72.0	120.0	SEE NOTE 2				120.0	1,406			2.00	
I-39 / US 20	D10-5	2634+68	RT	INTERMEDIATE ENHANCED REFERENCE LOCATION	TELESCOPING STEEL	18.0	60.0	7.5	12.0						17			NORTH I-39 MILE 120.2
I-39 / US 20	D10-5	2634+68	LT	INTERMEDIATE ENHANCED REFERENCE LOCATION	TELESCOPING STEEL	18.0	60.0	7.5	12.0						17			SOUTH I-39 MILE 120.2
I-39 / US 20	-	2636+50	RT	FOOD	BREAK-AWAY STEEL	240.0	120.0	200.0	SEE NOTE 2				200.0	1,710			2.00	
I-39 / US 20	D10-5	2645+24	LT	INTERMEDIATE ENHANCED REFERENCE LOCATION	TELESCOPING STEEL	18.0	60.0	7.5	12.0						17			SOUTH I-39 MILE 120.4
I-39 / US 20	D10-5	2645+24	RT	INTERMEDIATE ENHANCED REFERENCE LOCATION	TELESCOPING STEEL	18.0	60.0	7.5	12.0						17			NORTH I-39 MILE 120.4
I-39 / US 20	-	2652+50	RT	GAS	BREAK-AWAY STEEL	240.0	72.0	120.0	SEE NOTE 2				120.0	1,444			2.00	
I-39 / US 20	D10-5	2655+80	LT	INTERMEDIATE ENHANCED REFERENCE LOCATION	TELESCOPING STEEL	18.0	60.0	7.5	12.0						17			SOUTH I-39 MILE 120.6
I-39 / US 20	D10-5	2655+80	RT	INTERMEDIATE ENHANCED REFERENCE LOCATION	TELESCOPING STEEL	18.0	60.0	7.5	12.0						17			NORTH I-39 MILE 120.6
I-39 / US 20	D3-1	2664+00	RT	STREET NAME	WOOD POST	102.0	24.0	17.0	9.3	10.6		17.0				20		PERRYVILLE RD
I-39 / US 20	D10-5	2667+00	RT	INTERMEDIATE ENHANCED REFERENCE LOCATION	TELESCOPING STEEL	18.0	60.0	7.5	12.0						17			NORTH I-39 MILE 120.8
I-39 / US 20	D10-5	2667+73	LT	INTERMEDIATE ENHANCED REFERENCE LOCATION	TELESCOPING STEEL	18.0	60.0	7.5	12.0						17			SOUTH I-39 MILE 120.8
I-39 / US 20	D3-1	2667+73	LT	STREET NAME	WOOD POST	102.0	24.0	17.0	9.3	10.6		17.0				20		PERRYVILLE RD
I-39 / US 20	D10-4	2676+92	LT	ENHANCED REFERENCE LOCATION	TELESCOPING STEEL	18.0	54.0	6.8	12.0						17			SOUTH I-39 MILE 121
I-39 / US 20	D10-4	2676+92	RT	ENHANCED REFERENCE LOCATION	TELESCOPING STEEL	18.0	54.0	6.8	12.0						17			NORTH I-39 MILE 121
I-39 / US 20	CUSTOM	2680+00	RT	TOLLWAY WIDTH RESTRICTION	BREAK-AWAY STEEL	108.0	96.0	72.0	SEE NOTE 2				72.0	1,482			2.00	
I-39 / US 20	D10-5	2687+48	LT	INTERMEDIATE ENHANCED REFERENCE LOCATION	TELESCOPING STEEL	18.0	60.0	7.5	12.0						17			SOUTH I-39 MILE 121.2
I-39 / US 20	D10-5	2687+48	RT	INTERMEDIATE ENHANCED REFERENCE LOCATION	TELESCOPING STEEL	18.0	60.0	7.5	12.0						17			NORTH I-39 MILE 121.2
I-39 / US 20	R2-1	2692+51	LT	SPEED LIMIT - 65	WOOD POST	48.0	60.0	20.0	18.5	20.0		20.0				39		
I-39 / US 20	R2-1102	2692+51	LT	MINIMUM SPEED LIMIT - 45	WOOD POST	48.0	36.0	12.0				12.0						
I-39 / US 20	R2-1	2692+51	LT	SPEED LIMIT - 65	BAND	48.0	60.0	20.0				20.0						MINIMUM OF 4 BANDS
I-39 / US 20	R2-1102	2692+51	LT	MINIMUM SPEED LIMIT - 45	BAND	48.0	36.0	12.0				12.0						MINIMUM OF 3 BANDS
I-39 / US 20	2M-2	2694+50	RT	RECREATION GUIDE SIGN	WOOD POST	84.0	48.0	28.0	17.0	18.0						35		
I-39 / US 20	D10-5	2798+04	LT	INTERMEDIATE ENHANCED REFERENCE LOCATION	TELESCOPING STEEL	18.0	60.0	7.5	12.0						17			SOUTH I-39 MILE 121.4
I-39 / US 20	D10-5	2798+04	RT	INTERMEDIATE ENHANCED REFERENCE LOCATION	TELESCOPING STEEL	18.0	60.0	7.5	12.0						17			NORTH I-39 MILE 121.4
I-39 / US 20	M3-3	2700+00	LT	SOUTH (BLUE)	WOOD POST	36.0	18.0	4.5			4.5							
I-39 / US 20	M3-3	2700+00	LT	SOUTH (WHITE)	WOOD POST	36.0	18.0	4.5			4.5							
I-39 / US 20	M3-4	2700+00	LT	WEST (WHITE)	WOOD POST	36.0	18.0	4.5	17.0	19.0	4.5					36		
I-39 / US 20	M1-1	2700+00	LT	I-39 (BLUE)	WOOD POST	36.0	36.0	9.0			9.0							
I-39 / US 20	M1-4	2700+00	LT	US 51 (WHITE)	WOOD POST	36.0	36.0	9.0			9.0							
I-39 / US 20	M1-4	2700+00	LT	US 20 (WHITE)	WOOD POST	36.0	36.0	9.0			9.0							
I-39 / US 20	D10-5	2708+60	LT	INTERMEDIATE ENHANCED REFERENCE LOCATION	TELESCOPING STEEL	18.0	60.0	7.5	12.0						17			SOUTH I-39 MILE 121.6
I-39 / US 20	D10-5	2708+60	RT	INTERMEDIATE ENHANCED REFERENCE LOCATION	TELESCOPING STEEL	18.0	60.0	7.5	12.0						17			NORTH I-39 MILE 121.6
I-39 / US 20	W4-3	2714+00	LT	ADDED LANE	WOOD POST	48.0	48.0	16.0	18.0							18		
I-39 / US 20	W13-3	2714+08	RT	ADVISORY EXIT RAMP SPEED - 35 MPH	WOOD POST	48.0	60.0	20.0	18.0							18		
I-39 / US 20	E5-1a	2716+54	RT	EXIT GORE	WOOD POST	78.0	60.0	32.5	18.0	18.0						36		

MODEL: Schedules-25 [Sheet]
FILE NAME: c:\pwworkdir\benesch projects\projects\d0173723\D264C24-ML-sht-Schedules.dgn

benesch
Alfred Benesch & Company
35 W Wacker Drive, Suite 3200
Chicago, Illinois 60601
312-565-0450 Job No. 10800.00

USER NAME = agibson	DESIGNED - A. GIBSON	REVISED -	
	DRAWN - J.MAJCHER	REVISED -	
PLOT SCALE = $SCALE$	CHECKED - J.TARDY	REVISED -	
PLOT DATE = 2/6/2025	DATE - 02/14/2025	REVISED -	

STATE OF ILLINOIS
DEPARTMENT OF TRANSPORTATION

SCHEDULE OF QUANTITIES

SCALE: 1"=1'-0" | SHEET 25 OF 39 SHEETS | STA. TO STA.

F.A.I RTE.	SECTION	COUNTY	TOTAL SHEETS	SHEET NO.
*	(201-3)R & (4-1.5)R	WINNEBAGO	1685	73

CONTRACT NO. 64C24

ILLINOIS | FED. AID PROJECT

* FAI ROUTE 39 (I-39) & FAP 301 (US 20)

PROPOSED GROUND MOUNTED SIGNS

LOCATION	SIGN CODE	STATION	LT/RT	DESCRIPTION	MOUNTING TYPE	SIGN PANEL WIDTH	SIGN PANEL HEIGHT	SIGN PANEL AREA	POST ONE LENGTH	POST TWO LENGTH	72000100 SIGN PANEL - TYPE 1	72000200 SIGN PANEL - TYPE 2	72000300 SIGN PANEL - TYPE 3	72700100 STRUCTURAL STEEL SIGN SUPPORT BREAKAWAY WIDE FLANGE	72800100 TELESCOPING STEEL SIGN SUPPORT	73000100 WOOD SIGN SUPPORT	73400100 CONCRETE FOUNDATION	REMARKS
(ROAD)	(MUTCD or IDOT)	(STA)				(INCH)	(INCH)	(SQ FT)	(FOOT)	(FOOT)	(SQFT)	(SQFT)	(SQFT)	(POUND)	(FOOT)	(FOOT)	(CU YD)	
I-39 / US 20	D10-5	2719+16	LT	INTERMEDIATE ENHANCED REFERENCE LOCATION	TELESCOPING STEEL	18.0	60.0	7.5	12.0						17			SOUTH I-39 MILE 121.8
I-39 / US 20	D10-5	2719+16	RT	INTERMEDIATE ENHANCED REFERENCE LOCATION	TELESCOPING STEEL	18.0	60.0	7.5	12.0						17			NORTH I-39 MILE 121.8
I-39 / US 20	D10-4	2729+72	LT	ENHANCED REFERENCE LOCATION	TELESCOPING STEEL	18.0	54.0	6.8	12.0						17			SOUTH I-39 MILE 122
I-39 / US 20	D10-4	2729+72	RT	ENHANCED REFERENCE LOCATION	TELESCOPING STEEL	18.0	54.0	6.8	12.0						17			NORTH I-39 MILE 122
I-39 / US 20	W4-3	2731+59	RT	ADDED LANE	WOOD POST	48.0	48.0	16.0	18.0			16.0				18		
I-39 / US 20	W13-3	2738+91	LT	ADVISORY EXIT RAMP SPEED - 35 MPH	BAND	48.0	60.0	20.0	17.6									
I-39 / US 20	D10-5	2740+30	LT	INTERMEDIATE ENHANCED REFERENCE LOCATION	TELESCOPING STEEL	18.0	60.0	7.5	12.0		7.5				17			SOUTH I-39 MILE 122.2
I-39 / US 20	D10-5	2740+30	RT	INTERMEDIATE ENHANCED REFERENCE LOCATION	TELESCOPING STEEL	18.0	60.0	7.5	12.0		7.5				17			NORTH I-39 MILE 122.2
I-39 / US 20	W13-3	2747+60	RT	ADVISORY EXIT RAMP SPEED - 50 MPH	WOOD POST	48.0	60.0	20.0	18.0			20.0				18		
I-39 / US 20	E5-1a	2750+34	RT	EXIT GORE	WOOD POST	90.0	60.0	37.5	18.0	18.0			37.5		36			
I-39 / US 20	D10-5	2750+84	LT	INTERMEDIATE ENHANCED REFERENCE LOCATION	TELESCOPING STEEL	18.0	60.0	7.5	12.0		7.5				17			SOUTH I-39 MILE 122.2
I-39 / US 20	D10-5	2750+84	RT	INTERMEDIATE ENHANCED REFERENCE LOCATION	TELESCOPING STEEL	18.0	60.0	7.5	12.0		7.5				17			NORTH I-39 MILE 122.2
I-39 / US 20	R2-1	2750+84	LT	SPEED LIMIT - 65	WOOD POST	48.0	60.0	20.0	18.5	19.0		20.0				38		WITH FLAG
I-39 / US 20	R2-I102	2750+84	LT	MINIMUM SPEED LIMIT - 45	WOOD POST	48.0	36.0	12.0				12.0						
I-39 / US 20	R2-1	2750+84	LT	SPEED LIMIT - 65	WOOD POST	48.0	60.0	20.0	18.5	19.0		20.0				38		WITH FLAG
I-39 / US 20	R2-I102	2750+84	LT	MINIMUM SPEED LIMIT - 45	WOOD POST	48.0	36.0	12.0				12.0						
I-39 / US 20	W4-3	2756+24	LT	ADDED LANE	WOOD POST	48.0	48.0	16.0	18.0							18		
										SUBTOTALS	70.5	198.0	549.5	6,042.0	478.0	388.0	8.0	
										TOTALS	71	198	550	6,042	478	388	8	

NOTES:
1. CONTRACTOR SHALL CONTACT TRAFFIC OPERATION AFTER FINAL GRADING AND LIGHTING IS COMPLETED TO DETERMINE THE FINAL LAYOUT OF THE SIGNS.
2. THE STEEL POSTS IN THE SCHEDULE ARE FOR BIDDING PURPOSES ONLY. EACH POST SIZE AND LENGTH SHALL BE PROVIDED AFTER FINAL GRADING IS COMPLETED.
3. THE STEEL POSTS FOR THE PROPOSED GAS SIGN AT STA 2652+50 SHALL BE DESIGNED FOR A SPLIT 6 PANEL SIGN (12 FEET TALL).

PROPOSED OVERHEAD SIGNS											
LOCATION	SIGN CODE	STATION	DESCRIPTION	MOUNTING TYPE	SIGN PANEL WIDTH	SIGN PANEL HEIGHT	SIGN PANEL AREA	72000100	72000200	72000300	REMARKS
								SIGN PANEL, TYPE 1	SIGN PANEL, TYPE 2	SIGN PANEL, TYPE 3	
(ROAD)	(MUTCD or IDOT)	(STA)			(INCH)	(INCH)	(SQ FT)	(SQ FT)	(SQ FT)	(SQ FT)	
I-39 / US-20	2E-23	2603+00	INTERCHANGE EXIT DIRECTION	SPAN	198.00	216.00	297.00			297.00	I-39 US 51 NORTH TO I-90 TOLL
I-39 / US-20	2E-23	2603+00	INTERCHANGE EXIT DIRECTION	SPAN	282.00	198.00	387.75			387.75	HARRISON AVE / US 20 EAST
I-39 / US-20	2E-23	2630+80	INTERCHANGE EXIT DIRECTION	SPAN	198.00	120.00	165.00			165.00	US 20 WEST
I-39 / US-20	2E-23	2630+80	INTERCHANGE EXIT DIRECTION	SPAN	222.00	180.00	277.50			277.50	I-39 US 51 SOUTH
I-39 / US-20	2E-23	2644+50	INTERCHANGE EXIT DIRECTION	SPAN	198.00	216.00	297.00			297.00	I-39 US 51 NORTH TO I-90 TOLL
I-39 / US-20	2E-23	2644+50	INTERCHANGE EXIT DIRECTION	SPAN	282.00	198.00	387.75			387.75	HARRISON AVE / US 20 EAST
I-39 / US-20	2E-23	2657+00	INTERCHANGE EXIT DIRECTION	SPAN	198.00	120.00	165.00			165.00	US 20 WEST
I-39 / US-20	2E-23	2657+00	INTERCHANGE EXIT DIRECTION	SPAN	222.00	204.00	314.50			314.50	I-39 US 51 SOUTH
I-39 / US-20	2E-23	2673+00	INTERCHANGE EXIT DIRECTION	SPAN	198.00	216.00	297.00			297.00	I-39 US 51 NORTH TO I-90 TOLL
I-39 / US-20	2E-23	2673+00	INTERCHANGE EXIT DIRECTION	SPAN	282.00	198.00	387.75			387.75	HARRISON AVE / US 20 EAST
I-39 / US-20	2E-23	2679+00	INTERCHANGE EXIT DIRECTION	SPAN	198.00	120.00	165.00			165.00	US 20 WEST
I-39 / US-20	2E-23	2679+00	INTERCHANGE EXIT DIRECTION	SPAN	222.00	204.00	314.50			314.50	I-39 US 51 SOUTH
I-39 / US-20	-	2686+50	DYNAMIC MESSAGE BOARD	SPAN	300.00	60.00	125.00				DMS BOARD INCLUDED WITH ITS
I-39 / US-20	-	2689+00	DYNAMIC MESSAGE BOARD	SPAN	300.00	60.00	125.00				DMS BOARD INCLUDED WITH ITS
I-39 / US-20	2E-23	2699+95	INTERCHANGE EXIT DIRECTION	SPAN	198.00	216.00	297.00			297.00	I-39 US 51 NORTH TO I-90 TOLL
I-39 / US-20	2E-23	2699+95	INTERCHANGE EXIT DIRECTION	SPAN	282.00	180.00	352.50			352.50	HARRISON AVE / US 20 EAST
I-39 / US-20	2E-23	2707+00	INTERCHANGE EXIT DIRECTION	SPAN	198.00	120.00	165.00			165.00	US 20 WEST
I-39 / US-20	2E-23	2707+00	INTERCHANGE EXIT DIRECTION	SPAN	222.00	204.00	314.50			314.50	I-39 US 51 SOUTH
I-39 / US-20	2E-23	2719+25	INTERCHANGE EXIT DIRECTION	CANTILEVER	132.00	150.00	137.50			137.50	I-90 EAST TOLL
I-39 / US-20	2E-23	2746+00	INTERCHANGE EXIT DIRECTION	SPAN	216.00	162.00	243.00			243.00	I-39 US 51 NORTH TO I-90 TOLL
I-39 / US-20	2E-23	2746+00	INTERCHANGE EXIT DIRECTION	SPAN	174.00	150.00	181.25			181.25	
HARRISON AVE/US-20	2E-23	152+25	INTERCHANGE EXIT DIRECTION	CANTILEVER	216.00	84.00	126.00		PAID FOR AS: REMOVE AND REINSTALL SIGN PANEL (X7200075)		I-39 US 51 TOLL NORTH I-90 TOLL
HARRISON AVE/US-20	2E-23	152+25	PULL THROUGH	CANTILEVER	108.00	66.00	49.50			49.50	US 20 EAST
HARRISON AVE/US-20	E11-2	152+25	LEFT	SPAN	36.00	18.00	4.50		PAID FOR AS: REMOVE AND REINSTALL SIGN PANEL (X7200075)		MOUNTED ON TOP OF INTERCHANGE EXIT DIRECTION SIGN
							COLUMN 15 SUBTOTALS	0.00	0.00	5,196.00	
							TOTALS	0	0	5,196	

MODEL: Schedules-27 [Sheet]
FILE NAME: c:\pwworkl\benesch projects\projects\d0173723\D264C24-ML-sht-Schedules.dgn

benesch
Alfred Benesch & Company
35 W Wacker Drive, Suite 3300
Chicago, Illinois 60601
312-565-0450 Job No. 10800.00

USER NAME = agibson	DESIGNED - A. GIBSON	REVISED -	
	DRAWN - J.MAJCHER	REVISED -	
PLOT SCALE = $SCALE$	CHECKED - J.TARDY	REVISED -	
PLOT DATE = 2/6/2025	DATE - 02/14/2025	REVISED -	

STATE OF ILLINOIS
DEPARTMENT OF TRANSPORTATION

SCHEDULE OF QUANTITIES

SCALE: 1"=1'-0" | SHEET 27 OF 39 SHEETS | STA. TO STA.

F.A.I RTE.	SECTION	COUNTY	TOTAL SHEETS	SHEET NO.
*	(201-3)R & (4-1.5)R	WINNEBAGO	1685	75
		CONTRACT NO. 64C24		
	ILLINOIS	FED. AID PROJECT		

* FAI ROUTE 39 (I-39) & FAP 301 (US 20)

PROPOSED PAVEMENT MARKINGS

LOCATION	STATION	STATION	78004600 PREFORMED PLASTIC PAVEMENT MARKING, TYPE D - LETTERS AND SYMBOLS	78004620 PREFORMED PLASTIC PAVEMENT MARKING, TYPE D - LINE 4"		78004640 PREFORMED PLASTIC PAVEMENT MARKING, TYPE D - LINE 8"	78004645 PREFORMED PLASTIC PAVEMENT MARKING, TYPE D - LINE 9"		78004655 PREFORMED PLASTIC PAVEMENT MARKING, TYPE D - LINE 11"		78004660 PREFORMED PLASTIC PAVEMENT MARKING, TYPE D - LINE 12"		78004720 PREFORMED PLASTIC PAVEMENT MARKING, TYPE D - LINE 24"	78006100 PREFORMED THERMOPLASTIC PAVEMENT MARKING - LETTERS AND SYMBOLS	78009004 MODIFIED URETHANE PAVEMENT MARKING - LINE 4"		78009006 MODIFIED URETHANE PAVEMENT MARKING - LINE 6"	78009008 MODIFIED URETHANE PAVEMENT MARKING - LINE 8"		78009012 MODIFIED URETHANE PAVEMENT MARKING - LINE 12"		78011000 GROOVING FOR RECESSED PAVEMENT MARKING, LETTERS AND SYMBOLS	78011025 GROOVING FOR RECESSED PAVEMENT MARKING 5"	78011035 GROOVING FOR RECESSED PAVEMENT MARKING 7"	78011045 GROOVING FOR RECESSED PAVEMENT MARKING 9"	78011050 GROOVING FOR RECESSED PAVEMENT MARKING 10"	78011060 GROOVING FOR RECESSED PAVEMENT MARKING 12"	78011065 GROOVING FOR RECESSED PAVEMENT MARKING 13"	78011125 GROOVING FOR RECESSED PAVEMENT MARKING 25"	78100100 RAISED REFLECTIVE PAVEMENT MARKER	
(ROAD)	(STA)	(STA)	(SQ FT)	(FOOT)		(FOOT)	(FOOT)		(FOOT)		(FOOT)		(FOOT)	(SQ FT)	(FOOT)		(FOOT)	(FOOT)		(FOOT)		(SQFT)	(FOOT)	(FOOT)	(FOOT)	(FOOT)	(FOOT)	(FOOT)	(FOOT)	(EACH)	
			WHITE	SOLID WHITE	SOLID YELLOW	SOLID YELLOW	SOLID WHITE	SKIP-DASH WHITE	SOLID WHITE	DOTTED WHITE	SOLID WHITE	SOLID YELLOW	SOLID WHITE		SOLID WHITE	SOLID YELLOW	SKIP-DASH WHITE	SOLID WHITE	DOTTED WHITE	SOLID WHITE	SOLID YELLOW									CRYSTAL	AMBER
MAINLINE EX US 20	1147+12	1158+45						537		114					2,147	2,145							4,292		1,744	537	114			55	
MAINLINE I-39 / US 20	2571+69	2762+13						16,749	8,704	1,488	2,956			2,568	29,655	37,054	1,121	1,698	46	1,668	85	2,820	66,709	1,121		16,749	10,192	4,782		1,891	
RAMP BD	66+94	81+84						707	2,184						2,821	648							3,469			707	2,184			235	
RAMP DB	97+79	126+00						304	1,494						1,214								1,214			304	1,494			31	
RAMP A	107+65	114+77				86			486		18	14	20												86		486	32	20		
RAMP B	200+00	219+08						454	1,585				54		1,810	236							2,046			454	1,585		54	166	9
RAMP C	300+00	312+46							419		24																419	24		49	15
RAMP D	406+84	421+13							546						1,047	309							1,356				546				
HARRISON AVE	147+45	153+09	156	888	704		630	165	23	186			38									171	1,592			795	209		38	26	
US 20	1311+13	1316+97	96	930	707		370	255	36	192			26									106	1,637			625	228		26	24	
		TOTALS	252	1,818	1,411	86	1,000	19,171	15,477	1,980	2,998	14	138	2,568	38,694	40,392	1,121	1,698	46	1,668	85	3,097	82,315	1,121	1,830	20,171	17,457	4,838	138	2,477	24

63000001 STEEL PLATE BEAM GUARDRAIL, TYPE A, 6 FOOT POSTS					X4062952 HOT-MIX ASPHALT STABILIZATION 6" AT STEEL PLATE BEAM GUARDRAIL						63100167 TRAFFIC BARRIER TERMINAL, TYPE 1 (SPECIAL) TANGENT			63100045 TRAFFIC BARRIER TERMINAL, TYPE 2			63100070 TRAFFIC BARRIER TERMINAL, TYPE 5			63100085 TRAFFIC BARRIER TERMINAL, TYPE 6			63100089 TRAFFIC BARRIER TERMINAL, TYPE 6B			72501000 TERMINAL MARKER - DIRECT APPLIED	X7820007 GUARDRAIL REFLECTORS, TYPE C (SPECIAL)	REMARKS
STATION	OFFSET LT/RT	STATION	OFFSET LT/RT	LENGTH (FOOT)	STATION	OFFSET LT/RT	STATION	OFFSET LT/RT	AREA (SQ FT)	AREA (SQ YD)	STATION	OFFSET LT/RT	EACH	STATION	OFFSET LT/RT	EACH	STATION	OFFSET LT/RT	EACH	STATION	OFFSET LT/RT	EACH	STATION	OFFSET LT/RT	EACH	EACH	EACH	
2635+19	RT	2647+16	RT	1212.5	2634+66	RT	2647+36	RT	3882	432	2634+70	RT	1													1	17	
2636+41	LT	2646+80	LT	1025.0	2636+27	LT	2646+77	LT	3103	345				2636+27	LT	1	2646+80	LT	1								14	
2649+42	LT	2651+32	LT	187.5	2649+20	LT	2651+86	LT	796	89	2651+32	LT	1							2649+02	LT	1				1	4	
2649+71	RT	2655+26	RT	562.5	2649+72	RT	2655+40	RT	1725	192				2655+26	RT	1	2649+57	RT	1								8	
2654+67	LT	2669+39	LT	1462.5	2654+52	LT	2669+90	LT	4238	471	2669+39	LT	1	2654+52	LT	1										1	18	
2675+90	LT	2680+77	LT	487.5	2675+75	LT	2680+75	LT	1488	166				2675+75	LT	1	2680+77	LT	1								7	
2679+69	RT	2682+94	RT	325.0	2679+16	RT	2683+20	RT	1234	138	2679+19	RT	1							2682+94	RT	1				1	6	
2685+20	LT	2694+32	LT	912.5	2684+92	LT	2694+86	LT	2985	332	2694+32	LT	1							2684+80	LT	1				1	13	
2687+35	RT	2688+97	RT	162.5	2687+37	RT	2689+12	RT	513	57				2688+97	RT	1	2687+22	RT	1								3	
2702+60	RT	2704+35	RT	175.0	2702+07	RT	2704+72	RT	817	91	2702+10	RT	1										2704+35	RT	1	1	4	
2705+23	RT	2713+48	RT	825.0	2705+11	RT	2713+62	RT	2553	284				2713+48	RT	1	2705+11	RT	1								11	
2717+73	RT	2722+82	RT	512.5	2717+15	RT	2723+04	RT	1793	200	2717+23	RT	1							2722+82	RT	1				1	8	
2721+98	LT	2722+61	LT	62.5	2721+83	LT	2722+59	LT	217	25				2721+83	LT	1	2722+61	LT	1								2	
2725+81	LT	2727+45	LT	162.5	2725+58	LT	2728+05	LT	763	85	2727+45	LT	1							2725+43	LT	1				1	5	
2725+96	RT	2726+21	RT	25.0	2725+98	RT	2726+35	RT	111	13				2726+21	RT	1	2725+83	RT	1								1	
151+33	LT	152+46	LT	112.5							150+83	LT	1	152+21	LT	1										1	3	
SUBTOTALS				8212.5						2920			9			9			7			6			1	9	124	
TOTALS				8212.5						2920			9			9			7			6			1	9	124	

benesch
Alfred Benesch & Company
35 W Wacker Drive, Suite 3200
Chicago, Illinois 60601
312-565-0450 Job No. 10800.00

MODEL: Schedules-28 [Sheet]
FILE NAME: c:\pwworkf\benesch projects\projects\d0173723\D264C24-MLs-sht-Schedules.dgn

USER NAME = agibson	DESIGNED - A.GIBSON	REVISED -	
	DRAWN - A.GIBSON	REVISED -	
PLOT SCALE = $SCALE$	CHECKED - J.TARDY	REVISED -	
PLOT DATE = 2/6/2025	DATE - 02/14/2025	REVISED -	

STATE OF ILLINOIS
DEPARTMENT OF TRANSPORTATION

SCHEDULE OF QUANTITIES

SCALE: 1"=1'-0" | SHEET 28 OF 39 SHEETS | STA. TO STA.

F.A.I RTE.	SECTION	COUNTY	TOTAL SHEETS	SHEET NO.
*	(201-3)R & (4-1.5)R	WINNEBAGO	1685	76

CONTRACT NO. 64C24

ILLINOIS | FED. AID PROJECT

* FAI ROUTE 39 (I-39) & FAP 301 (US 20)

Z0062456							
TEMPORARY PAVEMENT							
87% FED / 13% STATE							
ROAD	STATION	STATION	LT / RT	REMOVED Y/N	SQ FT	SQ YD	REMARKS
I-39							
PRESTAGE							
PR I39	2620+83.00	2647+57.78	RT	Y	19,471	2,163	
PR I39	2636+33.89	2647+29.02	RT	Y	10,675	1,186	
PR I39	2649+21.70	2662+22.13	RT	Y	7,147	794	
PR I39	2670+27.82	2682+70.38	RT	Y	4,302	478	
PR I39	2702+64.28	2721+77.64	RT	Y	8,250	917	
PR I39	2715+64.10	2721+49.15	RT	Y	2,708	301	
PR I39	2725+54.72	2730+86.50	LT/RT	Y	3,337	371	
PR I39	2713+04.30	2720+41.13	LT	Y	13,201	1,467	
PR I39	2729+08.50	2731+62.04	RT	Y	2,415	268	
PR I39	2731+14.29	2734+56.81	RT	Y	1,754	195	
PR I39	2715+64.10	2717+82.99	RT	Y	1,798	200	
STAGE 1							
PR I39	2615+37.65	2637+53.47	LT	Y	22,571	2,508	
					SUBTOTAL	10,848	
US-20 / HARRISON AVE							
STAGE 1							
PrUS20Har	150+00.00	150+93.47	LT	Y	817	91	
					SUBTOTAL	91	
					GRAND TOTAL	10,939	

Z0062458									
TEMPORARY PAVEMENT (VARIABLE DEPTH)									
87% FED / 13% STATE									
ROAD	STATION	STATION	LT / RT	REMOVED Y/N	SQ FT	SQ YD	AVG DEPTH (IN)	TON	REMARKS
I-39									
STAGE 1									
PR I39	2693+63.00	2701+68.00	LT	Y	4,827	536	8	240	
STAGE 1C									
PR I39	2710+83.00	2711+74.73	LT	Y	592	66	11	41	
STAGE 2B									
PR I39	2643+57.43	2644+49.19	RT	Y	701	78	12	52	
PR I39	2678+02.97	2678+77.08	RT	Y	357	40	8	18	
PR I39	2701+93.00	2702+73.00	RT	Y	415	46	10	26	
PR I39	2721+12.16	2721+89.54	RT	Y	627	70	14	55	
PR I39	2710+82.60	2716+06.82	RT	Y	4,771	530	8	238	
							SUBTOTAL	669	
							GRAND TOTAL	669	

MODEL: Schedules-29 [Sheet]
FILE NAME: c:\pwworkdir\benesch projects\projects\d0173723\D284C24-MI-sht-Schedules.dgn

benesch
Alfred Benesch & Company
35 W Wacker Drive, Suite 3300
Chicago, Illinois 60601
312-565-0450 Job No. 10890.00

USER NAME = agibson	DESIGNED - A.GIBSON	REVISED -	
	DRAWN - A.GIBSON	REVISED -	
PLOT SCALE = 0.16666633 ' / in.	CHECKED - J.TARDY	REVISED -	
PLOT DATE = 2/6/2025	DATE -	REVISED -	

STATE OF ILLINOIS
DEPARTMENT OF TRANSPORTATION

SCHEDULE OF QUANTITIES

SCALE: 1"=1'-0" | SHEET 29 OF 39 SHEETS | STA. TO STA.

F.A.I RTE.	SECTION	COUNTY	TOTAL SHEETS	SHEET NO.
*	(201-3)R & (4-1.5)R	WINNEBAGO	1685	77
		CONTRACT NO. 64C24		
		ILLINOIS	FED. AID PROJECT	

* FAI ROUTE 39 (I-39) & FAP 301 (US 20)

X4400110						
TEMPORARY PAVEMENT REMOVAL						
87% FED / 13% STATE						
ROAD	STATION	STATION	LT / RT	SQ FT	SQ YD	REMARKS
I-39						
PRESTAGE						
PR I39	2620+83.00	2647+57.78	RT	19,471	2,163	
PR I39	2636+33.89	2647+29.02	RT	10,675	1,186	
PR I39	2649+21.70	2662+22.13	RT	7,147	794	
PR I39	2670+27.82	2682+70.38	RT	4,302	478	
PR I39	2702+64.28	2721+77.64	RT	8,250	917	
PR I39	2715+64.10	2721+49.15	RT	2,708	301	
PR I39	2725+54.72	2730+86.50	LT/RT	3,337	371	
PR I39	2713+04.30	2720+41.13	LT	13,201	1,467	
PR I39	2729+08.50	2731+62.04	RT	2,415	268	
PR I39	2731+14.29	2734+56.81	RT	1,754	195	
PR I39	2715+64.10	2717+82.99	RT	1,798	200	
STAGE 1						
PR I39	2615+37.65	2637+53.47	LT	22,571	2,508	
				SUBTOTAL	10,848	
US-20 / HARRISON AVE						
STAGE 1						
PrUS20Har	150+00.00	150+00.00	LT	817	91	
				SUBTOTAL	91	
				GRAND TOTAL	10,939	

MODEL: Schedules-30 [Sheet]
FILE NAME: c:\pwworki\benesch projects\projects\d0173723\D264C24-MI-sht-Schedules.dgn

benesch
Alfred Benesch & Company
35 W Wacker Drive, Suite 3300
Chicago, Illinois 60601
312-565-0450 Job No. 10800.00

USER NAME = agibson	DESIGNED - A.GIBSON	REVISED -	
	DRAWN - A.GIBSON	REVISED -	
PLOT SCALE = 0.16666633 ' / in.	CHECKED - J.TARDY	REVISED -	
PLOT DATE = 2/6/2025	DATE -	REVISED -	

STATE OF ILLINOIS
DEPARTMENT OF TRANSPORTATION

SCHEDULE OF QUANTITIES

SCALE: 1"=1'-0" | SHEET 30 OF 39 SHEETS | STA. TO STA.

F.A.I RTE.	SECTION	COUNTY	TOTAL SHEETS	SHEET NO.
*	(201-3)R & (4-1.5)R	WINNEBAGO	1685	78
		CONTRACT NO. 64C24		
	ILLINOIS	FED. AID PROJECT		

* FAI ROUTE 39 (I-39) & FAP 301 (US 20)

70400100						
TEMPORARY CONCRETE BARRIER						
87% FED / 13% STATE						
ALIGNMENT	STA FROM	LT/RT	STA TO	LT/RT	FOOT	REMARKS
I-39						
PreStage						
PR I-39	2632+22.52	RT	2633+99.69	RT	187.5	
PR I-39	2632+53.63	RT	2633+41.60	RT	100.0	
PR I-39	2632+76.28	RT	2634+54.53	RT	187.5	
PR I-39	2639+86.43	RT	2647+75.38	RT	800.0	
PR I-39	2646+49.13	LT	2652+52.78	LT	612.5	
PR I-39	2725+21.41	RT	2730+76.39	RT	562.5	
Stage 1						
PR I-39	2620+52.32	LT	2707+29.55	LT	9,000.0	
PR I-39	2622+39.09	LT	2623+79.35	LT	150.0	
PR I-39	2725+56.27	LT	2729+06.52	LT	350.0	
Stage 1B						
PR I-39	2706+02.77	LT	2711+31.27	LT	537.5	
PR I-39	2716+15.08	LT	2733+48.90	LT	1,750.0	
PR I-39	2726+40.00	LT	2729+17.31	RT	287.5	
Stage 1C						
PR I-39	2709+01.96	LT	2714+23.63	LT	525.0	
PR I-39	2711+31.78	LT	2716+15.08	LT	487.5	
Winter 1						
PR I-39	2639+68.48	RT	2647+53.39	RT	800.0	
PR I-39	2644+98.95	LT	2654+02.05	LT	900.0	
PR I-39	2679+98.82	LT	2687+97.75	LT	800.0	
PR I-39	2720+82.79	LT	2730+03.32	LT	925.0	
Stage 2						
PR I-39	2619+51.04	RT	2732+37.92	RT	11,337.5	
PR I-39	2620+55.87	LT	2645+00.20	LT	2,437.5	
PR I-39	2635+00.48	LT	2636+05.75	LT	112.5	
PR I-39	2654+02.85	LT	2660+77.41	LT	675.0	
PR I-39	2660+40.67	LT	2680+02.16	LT	1,962.5	
PR I-39	2688+00.30	LT	2703+03.76	LT	1,512.5	
PR I-39	2711+25.26	LT	2720+82.79	LT	962.5	
PR I-39	2730+01.65	LT	2733+70.85	LT	375.0	
Stage 3						
PR I-39	2619+55.04	RT	2644+06.54	RT	2,475.0	
PR I-39	2655+44.05	RT	2678+51.10	RT	2,312.5	
PR I-39	2687+99.06	RT	2702+46.89	RT	1,450.0	
PR I-39	2710+56.60	RT	2717+59.33	RT	725.0	
PR I-39	2716+33.90	RT	2721+69.17	RT	550.0	
PR I-39	2727+01.20	RT	2732+30.88	RT	537.5	
PR I-39	2731+61.51	RT	2732+36.45	RT	87.5	
Stage 3B						
PR I-39	2707+95.90	RT	2717+47.20	RT	962.5	
				SUBTOTAL	47,437.5	
US-20 / HARRISON AVE						
Stage 1B						
PR HAR AVE	150+35.59	LT	1313+77.81	LT	537.5	
PR HAR AVE	151+25.13	LT	1312+52.70	LT	325.0	
PR HAR AVE	151+94.64	RT	1312+99.88	RT	312.5	
Stage 3B						
PR HAR AVE	150+59.67	LT	151+26.24	LT	75.0	
PR HAR AVE	1312+52.69	LT	1313+07.95	LT	62.5	
PR HAR AVE	151+10.72	RT	151+94.86	RT	87.5	
PR HAR AVE	1312+99.01	RT	1313+49.43	RT	62.5	
				SUBTOTAL	1,462.5	
				GRAND TOTAL	48,900.0	

70400125							
PINNING TEMPORARY CONCRETE BARRIER							
87% FED / 13% STATE							
ALIGNMENT	STA FROM	LT/RT	STA TO	LT/RT	FOOT	EACH	REMARKS
I-39							
Stage 1							
PR I-39	2620+52.32	LT	2706+28.86	LT	8,950.0	2,142	
PR I-39	2649+30.32	RT	2652.44.10	RT	325.0	72	
Stage 1B							
PR I-39	2706+02.77	LT	2710+80.75	LT	487.5	111	
PR I-39	2716+15.08	LT	2733+00.00	LT	1,700.0	402	
PR I-39	2725+56.27	LT	2728+88.59	RT	337.5	75	
Stage 1C							
PR I-39	2703+60.25	LT	2716+15.08	LT	1,256.8	296	
Winter 1							
PR I-39	2639+68.48	RT	2647+53.39	RT	800.0	186	
PR I-39	2722+42.86	LT	2726+76.91	LT	437.5	99	
Stage 2							
PR I-39	2619+50.00	RT	2731+99.67	RT	11,200.0	2,682	
					SUBTOTAL	6,065	
US-20 / HARRISON AVE							
Stage 1B							
PR HAR AVE	150+35.59	LT	1313+77.81	LT	537.5	123	
Stage 3B							
PR HAR AVE	151+34.36	LT	1313+72.62	LT	437.5	99	
					SUBTOTAL	222	
					GRAND TOTAL	6,287	

70400200						
RELOCATE TEMPORARY CONCRETE BARRIER						
87% FED / 13% STATE						
ALIGNMENT	STA FROM	LT/RT	STA TO	LT/RT	FOOT	REMARKS
I-39						
PreStage						
PR I-39	2620+44.39	RT	2625+34.49	RT	500.0	
PR I-39	2646+49.13	LT	2652+52.78	LT	612.5	
PR I-39	2695+05.10	RT	2696+20.18	RT	250.0	
PR I-39	2705+62.33	LT	2706+90.34	LT	275.0	
PR I-39	2727+00.90	RT	2730+15.15	RT	650.0	
Stage 1						
PR I-39	2649+30.32	RT	2652+44.10	RT	325.0	
Stage 1C						
PR I-39	2709+11.96	LT	2711+31.78	LT	225.0	
Winter 1						
PR I-39	2702+99.84	LT	2711+25.72	LT	837.5	
Stage 2						
PR I-39	2645+00.20	LT	2654+02.85	LT	900.0	
PR I-39	2710+62.14	LT	2711+25.26	LT	75.0	
PR I-39	2729+02.17	LT	2730+01.65	LT	100.0	
Stage 2B						
PR I-39	2620+55.87	LT	2652+23.04	LT	3,162.5	
PR I-39	2660+13.75	LT	2661+16.08	LT	112.5	
PR I-39	2660+83.53	LT	2674+25.76	LT	1,350.0	
Winter 2						
PR I-39	2644+06.97	RT	2655+43.92	RT	1,150.0	
PR I-39	2678+49.42	RT	2688+00.90	RT	962.5	
PR I-39	2702+44.28	RT	2710+55.50	RT	812.5	
PR I-39	2721+67.23	RT	2727+01.20	RT	537.5	
Stage 3						
PR I-39	2644+06.54	RT	2655+44.05	RT	1,150.0	
PR I-39	2678+51.10	RT	2687+99.06	RT	950.0	
PR I-39	2702+46.89	RT	2710+56.60	RT	812.5	
PR I-39	2721+69.17	RT	2727+01.20	RT	537.5	
Stage 3B						
PR I-39	2708+32.56	RT	2717+38.87	RT	925.0	
				SUBTOTAL	17,212.5	
US-20 / HARRISON AVE						
PR HAR AVE	151+34.36	LT	1313+72.62	LT	437.5	
PR HAR AVE	151+26.24	LT	1312+52.69	LT	325.0	
PR HAR AVE	151+94.86	RT	1312+99.01	RT	312.5	
				SUBTOTAL	1,075.0	
				GRAND TOTAL	18,287.5	

MODEL: Schedules-31 [Sheet]
FILE NAME: c:\pwworkdir\benesch projects\projects\d0173723\D264C24-ML-sht-Schedules.dgn

benesch
Alfred Benesch & Company
35 W Wacker Drive, Suite 3200
Chicago, Illinois 60601
312-565-0450 Job No. 10800.00

USER NAME = agibson	DESIGNED - A.GIBSON	REVISED -	
	DRAWN - A.GIBSON	REVISED -	
PLOT SCALE = 0.16666633 ' / in.	CHECKED - J.TARDY	REVISED -	
PLOT DATE = 2/6/2025	DATE -	REVISED -	

STATE OF ILLINOIS
DEPARTMENT OF TRANSPORTATION

SCHEDULE OF QUANTITIES

SCALE: 1"=1'-0" | SHEET 31 OF 39 SHEETS | STA. TO STA.

F.A.I RTE.	SECTION	COUNTY	TOTAL SHEETS	SHEET NO.
*	(201-3)R & (4-1.5)R	WINNEBAGO	1685	79
		CONTRACT NO. 64C24		
	ILLINOIS	FED. AID PROJECT		

* FAI ROUTE 39 (I-39) & FAP 301 (US 20)

70600250					
IMPACT ATTENUATORS, TEMPORARY (NON-REDIRECTIVE), TEST LEVEL 3					
87% FED / 13% STATE					
ROAD	STATION	OFFSET	LT/RT	EACH	REMARKS
I-39					
PRESTAGE					
PR I39	2632+53.63	59.2	RT	1	
PR I39	2634+54.53	3.0	RT	1	
PR I39	2639+86.43	64.0	RT	1	
PR I39	2652+52.28	0.8	RT	1	
PR I39	2730+76.39	8.2	LT	1	
STAGE 1					
PR I39	2707+29.55	27.1	LT	1	
PR I39	2729+06.52	5.8	LT	1	
STAGE 1B					
PR I39	2733+48.90	30.8	LT	1	
WINTER 1					
PR I39	2687+97.75	33.5	LT	1	
STAGE 2					
PR I39	2619+51.04	31.1	RT	1	
WINTER 2					
PR I39	2678+49.42	37.7	RT	1	
PR I39	2702+44.28	37.8	RT	1	
			SUBTOTAL	12	
US-20 / HARRISON AVE					
STAGE 1B					
PrUS20Har	150+35.59	60.1	LT	1	
PrUS20Har	151+25.63	22.2	LT	1	
PrUS20Har	1312+99.97	20.0	RT	1	
			SUBTOTAL	3	
			GRAND TOTAL	15	

70600350					
IMPACT ATTENUATORS, RELOCATE (NON- REDIRECTIVE), TEST LEVEL 3					
87% FED / 13% STATE					
ROAD	STA	OFFSET	LT/RT	EACH	REMARKS
I-39					
STAGE 1					
PR I-39	2652+44.10	13.3	RT	1	
STAGE 1B					
PR I39	2711+31.27	32.1	LT	1	
STAGE 1C					
PR I-39	2714+23.20	86.8	LT	1	
WINTER 1					
PR I-39	2654+02.05	33.5	LT	1	
PR I-39	2711+25.72	24.7	LT	1	
PR I39	2730+02.61	31.7	LT	1	
STAGE 2					
PR I-39	2733+70.85	18.5	LT	1	
WINTER 2					
PR I-39	2644+06.97	38.5	RT	1	
PR I-39	2721+67.23	37.2	RT	1	
STAGE 3					
PR I-39	2619+55.00	37.5	RT	1	
PR I-39	2716+33.90	33.8	RT	1	
			SUBTOTAL	11	
HARRISON AVE					
STAGE 3B					
PR HAR AVE	150+59.62	26.5	LT	1	
PR HAR AVE	1313+49.43	27.2	RT	1	
			SUBTOTAL	2	
			GRAND TOTAL	13	

72100100								
SIGN PANEL OVERLAY								
87% FED / 13% STATE								
ROAD	STAGE	STA	LT/RT	DESCRIPTION	WIDTH	HEIGHT	SQ FT	REMARKS
I-39								
PR I-39	PRE	2654+00.00	LT	GM ARROW COVER	8.0	2.0	16	
PR I-39	3	2644+50.00	RT	OH ARROW COVER	16.5	3.0	50	
PR I-39	3	2644+50.00	RT	OH ARROW COVER	23.5	2.8	66	
PR I-39	3	2673+00.00	RT	OH ARROW COVER	16.5	2.6	43	
PR I-39	3	2673+00.00	RT	OH ARROW COVER	23.5	2.8	66	
PR I-39	3	2699+95.00	RT	OH ARROW COVER	16.5	2.6	43	
PR I-39	3	2699+95.00	RT	OH ARROW COVER	23.5	2.9	68	
						SUBTOTAL	352	
						GRAND TOTAL	352	

70600260					
IMPACT ATTENUATORS, TEMPORARY (FULLY REDIRECTIVE, NARROW), TEST LEVEL 3					
87% FED / 13% STATE					
ROAD	STATION	OFFSET	LT/RT	EACH	REMARKS
I-39					
PRESTAGE					
PR I-39	2632+22.52	26.5	RT	1	
STAGE 1					
PR I-39	2649+42.00	2.5	RT	1	
PR I-39	2623+79.35	2.3	RT	1	
PR I-39	2725+56.30	2.0	LT	1	
STAGE 1B					
PR I-39	2729+17.31	6.6	RT	1	
WINTER 1					
PR I-39	2639+68.48	71.5	RT	1	
STAGE 2					
PR I-39	2636+05.75	76.3	LT	1	
STAGE 3					
PR I-39	2731+61.51	68.5	RT	1	
STAGE 3B					
PR I-39	2708+32.56	58.5	RT	1	
			SUBTOTAL	9	
			GRAND TOTAL	9	

70600332					
IMPACT ATTENUATORS,RELOCATE (FULLY REDIRECTIVE, NARROW), TEST LEVEL 3					
87% FED / 13% STATE					
ROAD	STA	OFFSET	LT/RT	EACH	REMARKS
I-39					
WINTER 1					
PR I-39	2647+53.39	74.9	RT	1	
STAGE 3B					
PR I-39	2707+96.00	33.5	RT	1	
			SUBTOTAL	2	
			GRAND TOTAL	2	

MODEL: Schedules-32 [Sheet]
FILE NAME: c:\pwworkdir\benesch projects\projects\d0173723\D264C24-ML-sht-Schedules.dgn

benesch
Alfred Benesch & Company
35 W Wacker Drive, Suite 3200
Chicago, Illinois 60601
312-565-0450 Job No. 10800.00

USER NAME = agibson	DESIGNED - A.GIBSON	REVISED -	
	DRAWN - A.GIBSON	REVISED -	
PLOT SCALE = 0.16666633 ' / in.	CHECKED - J.TARDY	REVISED -	
PLOT DATE = 2/6/2025	DATE -	REVISED -	

STATE OF ILLINOIS
DEPARTMENT OF TRANSPORTATION

SCHEDULE OF QUANTITIES

SCALE: 1"=1'-0" | SHEET 32 OF 39 SHEETS | STA. TO STA.

F.A.I RTE.	SECTION	COUNTY	TOTAL SHEETS	SHEET NO.
*	(201-3)R & (4-1.5)R	WINNEBAGO	1685	80
		CONTRACT NO. 64C24		
	ILLINOIS	FED. AID PROJECT		

* FAI ROUTE 39 (I-39) & FAP 301 (US 20)

72400730								
RELOCATE SIGN PANEL - TYPE 3								
87% FED / 13% STATE								
ROAD	STAGE	STA	LT/RT	DESCRIPTION	WIDTH	HEIGHT	SQ FT	REMARKS
I-39								
PR I-39	PRE	2654+00.00	LT	BL/NOR EXIT	12.0	10.0	120	
PR I-39	1B	2704+00.00	RT	HAR AVE EXIT	10.0	12.0	120	
PR I-39	2	2671+00.00	RT	HAR AVE EXIT	12.0	12.0	144	
						SUBTOTAL	384	
						GRAND TOTAL	384	

72700100					
STRUCTURAL STEEL SIGN SUPPORT - BREAKAWAY					
87% FED / 13% STATE					
ROAD	STA	LT/RT	DESCRIPTION	POUND	REMARKS
I-39					
PRESTAGE					
PR I-39	2654+00.00	LT	GM TEMP SIGN	1,300	
STAGE 1B					
PR I-39	2704+00.00	RT	GM TEMP SIGN	1,508	
STAGE 2					
PR I-39	2671+00.00	RT	GM TEMP SIGN	1,300	
			SUBTOTAL	4,108	
			GRAND TOTAL	**4,108**	

73400100					
CONCRETE FOUNDATIONS					
87% FED / 13% STATE					
ROAD	STA	LT/RT	DESCRIPTION	CU YD	REMARKS
I-39					
PRESTAGE					
PR I-39	2654+00.00	LT	TEMP GM SIGN	2.5	
STAGE 1B					
PR I-39	2704+00.00	RT	TEMP GM SIGN	2.8	
STAGE 2					
PR I-39	2671+00.00	RT	TEMP GM SIGN	2.5	
			SUBTOTAL	8	
			GRAND TOTAL	**8**	

73700100					
REMOVE GROUND MOUNTED SIGN SUPPORT					
87% FED / 13% STATE					
ROAD	STA	LT/RT	DESCRIPTION	EACH	REMARKS
I-39					
PRESTAGE					
PR I-39	2654+00	LT	TEMP GM SIGN	2	
STAGE 1B					
PR I-39	2704+00	RT	TEMP GM SIGN	2	
STAGE 2					
PR I-39	2671+00	RT	TEMP GM SIGN	2	
			SUBTOTAL	6	
			GRAND TOTAL	**6**	

73700200					
REMOVE CONCRETE FOUNDATION - GROUND MOUNT					
87% FED / 13% STATE					
ROAD	STA	LT/RT	DESCRIPTION	EACH	REMARKS
I-39					
PRESTAGE					
PR I-39	2654+00	LT	TEMP GM SIGN	2	
STAGE 1B					
PR I-39	2704+00	RT	TEMP GM SIGN	2	
STAGE 2					
PR I-39	2671+00	RT	TEMP GM SIGN	2	
			SUBTOTAL	6	
			GRAND TOTAL	6	

50800205					
REINFORCEMENT BARS, EPOXY COATED					
87% FED / 13% STATE					
ROAD	STA	LT/RT	DESCRIPTION	POUND	REMARKS
I-39					
PRESTAGE					
PR I-39	2654+00.00	LT	GM REL SIGN	196	
STAGE 1B					
PR I-39	2704+00	RT	GM REL SIGN	214	
STAGE 2					
PR I-39	2671+00.00	RT	GM REL SIGN	196	
			SUBTOTAL	606	
			GRAND TOTAL	**606**	

78100200						
TEMPORARY RAISED REFLECTIVE PAVEMENT MARKER						
87% FED / 13% STATE						
ROAD	STA	STA	DIRECTION	DESCRIPTION	EACH	REMARKS
I-39						
PRESTAGE						
PR I39	2629+50.00	2652+50.00	SB	3 LINES AT 10' C-C	690	
STAGE 2						
PR I39	2610+50.00	2619+72.00	NB	3 LINES AT 10' C-C	277	
PR I39	2732+00.00	2737+00.00	NB	3 LINES AT 10' C-C	150	
WINTER 1						
PR I39	2607+50.00	2629+00.00	SB	3 LINES AT 10' C-C*	1290	
PR I39	2732+00.00	2742+00.00	SB	3 LINES AT 10' C-C*	600	
				SUBTOTAL	3007	
				GRAND TOTAL	**3,007**	
*QUANTITY INCLUDES ONE ADDITIONAL APPLICATION FOR DAMAGED REFLECTORS OVER WINTER						

70107025				
CHANGEABLE MESSAGE SIGN				
87% FED / 13% STATE				
ROAD	STAGE/ACTIVITY	DESCRIPTION	CAL DA	REMARKS
I-39				
I-39 NB/SB	PRESTAGE	TWO WEEKS ADVANCE	28	
I-39 SB	1	TWO WEEKS ADVANCE	14	
I-39 SB	WINTER STAGE 1	TWO WEEKS ADVANCE	14	
I-39 NB/SB	2	TWO WEEKS ADVANCE	28	
I-39 SB	2B	TWO WEEKS ADVANCE	14	
I-39 NB/SB	WINTER STAGE 2	TWO WEEKS ADVANCE	28	
I-39 NB	3	TWO WEEKS ADVANCE	14	
I-39 NB	3B	TWO WEEKS ADVANCE	14	
I-39 NB/SB		SIGN STRUCTURES	56	
		SUBTOTAL	210	
HARRISON AVE				
HARRISON AVE EB/WB	STAGE 1B	TWO WEEKS ADVANCE	28	
HARRISON AVE EB/WB	STAGE 3B	TWO WEEKS ADVANCE	28	
HARRISON AVE EB	STAGE 3C	TWO WEEKS ADVANCE	14	
		SUBTOTAL	70	
		GRAND TOTAL	280	

MODEL: Schedules-33 [Sheet]
FILE NAME: c:\pwworkdir\benesch projects\projects\d0173723\D264C24-ML-sht-Schedules.dgn

benesch
Alfred Benesch & Company
35 W Wacker Drive, Suite 3200
Chicago, Illinois 60601
312-565-0450 Job No. 10800.00

USER NAME = agibson	DESIGNED - A.GIBSON	REVISED -	
	DRAWN - A.GIBSON	REVISED -	
PLOT SCALE = 0.16666633 ' / in.	CHECKED - J.TARDY	REVISED -	
PLOT DATE = 2/6/2025	DATE -	REVISED -	

STATE OF ILLINOIS
DEPARTMENT OF TRANSPORTATION

SCHEDULE OF QUANTITIES

SCALE: 1"=1'-0" | SHEET OF 39 SHEETS | STA. TO STA.

F.A.I RTE.	SECTION	COUNTY	TOTAL SHEETS	SHEET NO.
*	(201-3)R & (4-1.5)R	WINNEBAGO	1685	81
		CONTRACT NO. 64C24		
	ILLINOIS	FED. AID PROJECT		

* FAI ROUTE 39 (I-39) & FAP 301 (US 20)

70303120										
TEMPORARY PAVEMENT MARKING - LINE 4" - MODIFIED URETHANE										
87% FED / 13% STATE										
Road	STA	LT/RT	STA	LT/RT	# COATS	DESCRIPTION	FACTOR	LENGTH	FOOT	REMARKS
I-39										
PRESTAGE										
PR I39	2619+92.42	RT	2648+79.05	RT	1	SOLID WHITE	1	2913	2,913	
PR I39	2611+06.19	LT	2718+19.72	LT	1	SOLID YELLOW	1	10712	10,712	
PR I39	2607+78.48	LT	2718+19.93	LT	1	SOLID WHITE	1	10747	10,747	
PR I39	2607+78.48	LT	2638+00.00	LT	1	SOLID WHITE	1	3025	3,025	
PR I39	2607+78.48	LT	2615+91.43	LT	1	SOLID WHITE	1	833	833	
PR I39	2611+06.19	LT	2615+91.43	LT	1	SOLID WHITE	1	482	482	
STAGE 1										
PR I39	2608+78.65	LT	2615+74.18	LT	1	SOLID WHITE	1	691	691	
PR I39	2608+48.45	LT	2716+69.79	LT	1	SOLID YELLOW	1	10822	10,822	
PR I39	2608+48.45	LT	2615+74.18	LT	1	SOLID WHITE	1	251	251	
PR I39	2610+80.00	LT	2636+50.00	LT	1	SOLID WHITE	1	2564	2,564	
PR I39	2608+78.65	LT	2720+41.13	LT	1	SOLID WHITE	1	11592	11,592	
PR I39	2712+50.00	LT	2715+54.26	LT	1	SOLID WHITE	1	295	295	
PR I39	2712+50.00	LT	2716+69.70	LT	1	SOLID WHITE	1	405	405	
PR I39	2715+54.26	LT	2720+41.13	LT	1	SOLID YELLOW	1	590	590	
PR I39	2619+92.42	RT	2648+79.12	RT	1	SOLID WHITE	1	2914	2,914	
STAGE 1B										
PR I39	2704+00.00	LT	2720+58.98	LT	1	SOLID WHITE	1	1747	1,747	
PR I39	2712+64.42	LT	2715+57.76	LT	1	SOLID WHITE	1	295	295	
PR I39	2715+57.76	LT	2720+68.35	RT	1	SOLID YELLOW	1	590	590	
PR I39	2712+64.42	LT	2731+99.90	LT	1	SOLID WHITE	1	2677	2,677	
PR I39	2704+00.00	LT	2742+04.91	LT	1	SOLID YELLOW	1	3803	3,803	
STAGE 1C										
PR I39	2693+51.90	LT	2720+58.34	LT	1	SOLID WHITE	1	2748	2,748	
PR I39	2699+67.08	LT	2708+91.20	LT	1	SOLID WHITE	1	925	925	
PR I39	2709+37.91	LT	2712+37.51	LT	1	SOLID WHITE	1	300	300	
PR I39	2708+91.20	LT	2720+68.35	LT	1	SOLID YELLOW	1	1212	1,212	
STAGE 2										
PR I39	2607+00.00	RT	2710+80.33	RT	1	SOLID WHITE	1	10437	10,437	
PR I39	2714+95.86	RT	2734+25.46	RT	1	SOLID WHITE	1	1958	1,958	
PR I39	2730+29.06	RT	2732+91.21	RT	1	SOLID WHITE	1	270	270	
PR I39	2730+34.70	RT	2739+41.63	RT	1	SOLID WHITE	1	922	922	
PR I39	2610+58.26	RT	2736+81.33	RT	1	SOLID YELLOW	1	12675	12,675	
PR I39	2643+00.91	LT	2701+00.00	LT	1	SOLID YELLOW	1	5784	5,784	
STAGE 2B										
PR I39	2607+50.00	LT	2707+83.50	LT	1	SOLID YELLOW	1	10004	10,004	
PR I39	2608+81.53	LT	2653+59.78	LT	1	SOLID WHITE	1	4425	4,425	
PR I39	2693+97.12	LT	2711+39.96	LT	1	SOLID WHITE	1	1743	1,743	
PR I39	2705+50.00	LT	2711+39.79	LT	1	SOLID WHITE	1	590	590	
PR I39	2615+00.00	LT	2629+00.27	LT	1	SOLID WHITE	1	1388	1,388	
PR I39	2607+50.00	LT	2616+55.28	LT	1	SOLID WHITE	1	901	901	
PR I39	2608+81.53	LT	2616+55.28	LT	1	SOLID YELLOW	1	771	771	
STAGE 3										
PR I39	2618+00.53	RT	2718+11.82	RT	1	SOLID WHITE	1	10062	10,062	
PR I39	2618+00.00	RT	2733+01.16	RT	1	SOLID YELLOW	1	11506	11,506	
PR I39	2714+18.45	RT	2718+29.95	RT	1	SOLID WHITE	1	443	443	
PR I39	2714+18.45	RT	2733+00.55	RT	1	SOLID WHITE	1	1890	1,890	
PR I39	2730+30.50	RT	2734+72.00	RT	1	SOLID WHITE	1	583	583	
STAGE 3B										
PR I39	2608+00.00	RT	2718+35.12	RT	1	SOLID WHITE	1	11100	11,100	
PR I39	2693+46.17	RT	2700+16.61	RT	1	SOLID WHITE	1	671	671	
PR I39	2700+16.61	RT	2718+89.63	RT	1	SOLID YELLOW	1	1907	1,907	
PR I39	2710+19.32	RT	2714+31.20	RT	1	SOLID WHITE	1	412	412	
WINTER 1										
PR I39	2607+50.00	LT	2741+43.60	LT	1	SOLID YELLOW	1	13349	13,349	
PR I39	2607+49.80	LT	2614+97.79	LT	1	SOLID WHITE	1	745	745	
PR I39	2608+79.43	LT	2614+97.79	LT	1	SOLID WHITE	1	615	615	
PR I39	2608+79.43	LT	2713+27.00	LT	1	SOLID WHITE	1	10378	10,378	
PR I39	2711+39.79	LT	2713+29.32	LT	1	SOLID WHITE	1	190	190	
PR I39	2711+39.79	LT	2741+44.29	LT	1	SOLID WHITE	1	4125	4,125	
PR I39	2737+48.23	LT	2739+32.97	LT	1	SOLID WHITE	1	185	185	
PR I39	2615+00.00	LT	2630+79.73	LT	1	SOLID WHITE	1	1560	1,560	
WINTER 2										
PR I39	2604+56.90	RT	2718+36.11	RT	1	SOLID WHITE	1	11452	11,452	
PR I39	2610+58.26	RT	2736+82.71	RT	1	SOLID YELLOW	1	12636	12,636	
PR I39	2714+35.54	RT	2718+49.61	RT	1	SOLID WHITE	1	456	456	
PR I39	2714+29.00	RT	2734+72.41	RT	1	SOLID WHITE	1	2079	2,079	
PR I39	2730+29.06	RT	2734+72.41	RT	1	SOLID WHITE	1	471	471	
PR I39	2730+35.43	RT	2736+77.94	RT	1	SOLID WHITE	1	671	671	
								SUBTOTAL	222,489	

70303120										
TEMPORARY PAVEMENT MARKING - LINE 4" - MODIFIED URETHANE										
87% FED / 13% STATE										
Road	STA	LT/RT	STA	LT/RT	# COATS	DESCRIPTION	FACTOR	LENGTH	FOOT	REMARKS
US-20 / HARRISON AVE										
STAGE 1B										
PrUS20Har	149+15.20	LT	149+36.75	LT	1	SOLID YELLOW	1	23	23	
PrUS20Har	149+19.74	LT	1314+19.50	LT	1	SOLID WHITE	1	694	694	
PrUS20Har	150+01.73	LT	1313+56.58	LT	1	SOLID YELLOW	1	548	548	
PrUS20Har	150+15.16	RT	1314+15.88	RT	1	SOLID WHITE	1	600	600	
PrUS20Har	152+16.54	RT	1313+15.57	RT	1	SOLID YELLOW	1	296	296	
PrUS20Har	1313+69.63	LT	1314+19.18	LT	1	SOLID WHITE	1	49	49	
STAGE 3B										
PrUS20Har	151+06.48	LT	1313+02.66	LT	1	SOLID YELLOW	1	403	403	
PrUS20Har	151+06.49	LT	1314+23.88	LT	1	SOLID WHITE	1	525	525	
PrUS20Har	150+61.06	RT	1313+49.43	RT	1	SOLID WHITE	1	500	500	
PrUS20Har	152+10.88	RT	1313+33.17	RT	1	SOLID YELLOW	1	369	369	
STAGE 3C										
PrUS20Har	148+69.56	LT	1315+73.67	LT	1	SOLID WHITE	1	863	863	
PrUS20Har	149+50.92	LT	1314+20.79	LT	1	SOLID YELLOW	1	614	614	
								SUBTOTAL	5,487	
								GRAND TOTAL	**227,976**	

MODEL: Schedules-34 [Sheet]
FILE NAME: c:\pwworkfi\benesch projects\projects\d0173723\D264C24-MLs-sht-Schedules.dgn

benesch
Alfred Benesch & Company
35 W Wacker Drive, Suite 3200
Chicago, Illinois 60601
312-565-0450 Job No. 10800.00

USER NAME = agibson	DESIGNED - A.GIBSON	REVISED -	
	DRAWN - A.GIBSON	REVISED -	
PLOT SCALE = 0.16666633 ' / in.	CHECKED - J.TARDY	REVISED -	
PLOT DATE = 2/6/2025	DATE -	REVISED -	

STATE OF ILLINOIS
DEPARTMENT OF TRANSPORTATION

SCHEDULE OF QUANTITIES

SCALE: 1"=1'-0" | SHEET OF 39 SHEETS | STA. TO STA.

F.A.I RTE.	SECTION	COUNTY	TOTAL SHEETS	SHEET NO.
*	(201-3)R & (4-1.5)R	WINNEBAGO	1685	82
		CONTRACT NO. 64C24		
	ILLINOIS	FED. AID PROJECT		

* FAI ROUTE 39 (I-39) & FAP 301 (US 20)

70303130										
TEMPORARY PAVEMENT MARKING - LINE 6" - MODIFIED URETHANE										
87% FED / 13% STATE										
Road	STA	LT/RT	STA	LT/RT	# COATS	DESCRIPTION	FACTOR	LENGTH	FOOT	REMARKS
I-39										
PRESTAGE										
PR I39	2619+92.47	RT	2648+79.37	RT	1	SKIP DASH	0.25	2907	727	
PR I39	2611+06.19	LT	2718+19.72	LT	1	SKIP DASH	0.25	10701	2,675	
PR I39	2638+00.00	LT	2641+00.07	LT	1	3'-9' SKIP DASH	0.25	298	75	
PR I39	2703+82.86	LT	2706+85.85	LT	1	3'-9' SKIP DASH	0.25	303	76	
STAGE 1										
PR I39	2608+48.45	LT	2716+69.70	LT	1	SKIP DASH	0.25	10980	2,745	
PR I39	2619+92.46	RT	2648.79.37	RT	1	SKIP DASH	0.25	2908	727	
PR I39	2636+60.00	LT	2642+00.08	LT	1	3'-9' SKIP DASH	0.25	545	136	
PR I39	2706+68.96	LT	2712+64.44	LT	1	3'-9' SKIP DASH	0.25	595	149	
PR I39	2608+78.65	LT	2611+00.00	LT	1	SKIP DASH	0.25	204	51	
STAGE 1B										
PR I39	2704+00.00	LT	2742+04.91	LT	1	SKIP DASH	0.25	3784	946	
PR I39	2709+37.91	LT	2712+35.45	LT	1	3'-9' SKIP DASH	0.25	300	75	
STAGE 1C										
PR I39	2718+43.67	LT	2720+72.72	LT	1	SKIP DASH	0.25	239	60	
PR I39	2694+50.00	LT	2700+65.18	LT	1	3'-9' SKIP DASH	0.25	615	154	
STAGE 2										
PR I39	2610+58.02	RT	2736+80.35	RT	1	SKIP DASH	0.25	12697	3,174	
PR I39	2610+57.79	RT	2613+66.12	RT	1	3'-9' SKIP DASH	0.25	310	78	
PR I39	2710+82.14	RT	2714+65.75	RT	1	3'-9' SKIP DASH	0.25	384	96	
PR I39	2734+25.40	RT	2736+79.34	RT	1	3'-9' SKIP DASH	0.25	255	64	
PR I39	2647+00.00	LT	2701+00.00	LT	1	SKIP DASH	0.25	5425	1,356	
STAGE 2B										
PR I39	2607+50.01	LT	2707+83.50	LT	1	SKIP DASH	0.25	9994	2,498	
PR I39	2693+97.12	LT	2705+50.00	LT	1	SKIP DASH	0.25	1153	288	
PR I39	2608+81.53	LT	2615+00.00	LT	1	SKIP DASH	0.25	613	153	
PR I39	2629+00.27	LT	2653.59.78	LT	1	3'-9' SKIP DASH	0.25	2434	609	
STAGE 3										
PR I39	2618+00.24	RT	2733+00.86	RT	1	SKIP DASH	0.25	11518	2,879	
PR I39	2618+00.48	RT	2620+00.55	RT	1	3'-9' SKIP DASH	0.25	201	50	
PR I39	2709+85.55	RT	2714+18.45	RT	1	3'-9' SKIP DASH	0.25	433	108	
STAGE 3B										
PR I39	2607+00.02	RT	2673+01.95	RT	1	SKIP DASH	0.25	6625	1,656	
PR I39	2673+01.95	RT	2693+46.17	RT	1	3'-9' SKIP DASH	0.25	2044	511	
WINTER 1										
PR I39	2607+49.70	LT	2741+43.95	LT	1	SKIP DASH	0.25	14469	3,617	
PR I39	2608+79.43	LT	2615+00.00	LT	1	SKIP DASH	0.25	613	153	
PR I39	2701+81.81	LT	2711+39.79	LT	1	3'-9' SKIP DASH	0.25	958	240	
WINTER 2										
PR I39	2610+57.11	RT	2736+81.63	RT	1	SKIP DASH	0.25	12650	3,162	
PR I39	2610+57.11	RT	2620+00.14	RT	1	3'-9' SKIP DASH	0.25	948	237	
PR I39	2710+17.14	RT	2714+29.00	RT	1	3'-9' SKIP DASH	0.25	412	103	
PR I39	2734+72.41	RT	2736+79.56	RT	1	3'-9' SKIP DASH	0.25	208	52	
								SUBTOTAL	29,682	
US-20 / HARRISON AVE										
STAGE 1B										
PrUS20Har	149+17.48	RT	1313+69.63	RT	1	SKIP DASH	0.25	645	161	
PrUS20Har	150+15.08	LT	1314+15.72	LT	1	SKIP DASH	0.25	602	150	
PrUS20Har	149+36.75	LT	150+01.73	LT	1	3'-9' SKIP DASH	0.25	131	33	
PrUS20Har	150+14.99	RT	152+16.54	RT	1	3'-9' SKIP DASH	0.25	204	51	
PrUS20Har	1312+69.53	LT	1314+42.39	LT	1	3'-9' SKIP DASH	0.25	171	43	
STAGE 3B										
PrUS20Har	151+06.00	LT	1314+23.88	LT	1	SKIP DASH	0.25	525	131	
PrUS20Har	150+61.00	RT	1313+49.40	RT	1	SKIP DASH	0.25	560	140	
PrUS20Har	1311+99.82	LT	1314+42.13	LT	1	3'-9' SKIP DASH	0.25	242	60	
STAGE 3C										
PrUS20Har	148+69.00	LT	1314+42.00	LT	1	SKIP DASH	0.25	1000	250	
PrUS20Har	1312+57.78	LT	1314+42.13	LT	1	3'-9' SKIP DASH	0.25	210	53	
								SUBTOTAL	1,073	
								GRAND TOTAL	**30,755**	

MODEL: Schedules-35 [Sheet]
FILE NAME: c:\pwworkdir\benesch projects\projects\d0173723\D264C24-ML-sht-Schedules.dgn

benesch
Alfred Benesch & Company
35 W Wacker Drive, Suite 3200
Chicago, Illinois 60601
312-654-0450 Job No. 10800.00

USER NAME = agibson	DESIGNED - A.GIBSON	REVISED -	
	DRAWN - A.GIBSON	REVISED -	
PLOT SCALE = 0.16666633 ' / in.	CHECKED - J.TARDY	REVISED -	
PLOT DATE = 2/6/2025	DATE -	REVISED -	

STATE OF ILLINOIS
DEPARTMENT OF TRANSPORTATION

SCHEDULE OF QUANTITIES

SCALE: 1"=1'-0" | SHEET OF 39 SHEETS | STA. TO STA.

F.A.I RTE.	SECTION	COUNTY	TOTAL SHEETS	SHEET NO.
*	(201-3)R & (4-1.5)R	WINNEBAGO	1685	83
		CONTRACT NO. 64C24		
	ILLINOIS	FED. AID PROJECT		

* FAI ROUTE 39 (I-39) & FAP 301 (US 20)

70303140										
TEMPORARY PAVEMENT MARKING - LINE 8" - MODIFIED URETHANE										
87% FED / 13% STATE										
Road	STA	LT/RT	STA	LT/RT	# COATS	DESCRIPTION	FACTOR	LENGTH	FOOT	REMARKS
I-39										
WINTER 1										
PR I39	2630+79.73	LT	2635+15.00	LT	1	3'-9' SKIP DASH	0.25	430	107	
								SUBTOTAL	108	
								GRAND TOTAL	**108**	

70303160										
TEMPORARY PAVEMENT MARKING - LINE 12" - MODIFIED URETHANE										
87% FED / 13% STATE										
Road	STA	LT/RT	STA	LT/RT	# COATS	DESCRIPTION	FACTOR	LENGTH	FOOT	REMARKS
PRESTAGE										
PR I39	2707+00.00	LT	2712+00.00	LT	1	RAMP GORE	1	303	303	
WINTER 1										
PR I39	2609+00.00	LT	2617+00.00	LT	1	RAMP GORE	1	443.0	443.0	
PR I39	2712+00.00	LT	2714+00.00	LT	1	RAMP GORE	1	39.1	39.1	
PR I39	2737+00.00	LT	2739+00.00	LT	1	RAMP GORE	1	43.5	43.5	
WINTER 2										
PR I39	2732+00.00	RT	2734+00.00	RT	1	RAMP GORE	1	140.2	140.2	
								SUBTOTAL	970	
								GRAND TOTAL	**970**	

70303100							
TEMPORARY PAVEMENT MARKING LETTERS AND SYMBOLS - MODIFIED URETHANE							
87% FED / 13% STATE							
Road	STA	LT/RT	# COATS	DESCRIPTION	FACTOR	SQ FT	REMARKS
STAGE 2							
PR I39	2604+80.85	RT	1	NB	1	41.875	
PR I39	2606+80.85	RT	1	NB	1	41.875	
WINTER 2							
PR I39	2608+47.14	RT	1	NB	1	41.875	
PR I39	2610+47.14	RT	1	NB	1	41.875	
					SUBTOTAL	168	
					GRAND TOTAL	168	

MODEL: Schedules-36 [Sheet]
FILE NAME: c:\pwworkdir\benesch projects\projects\d0173723\D284C24-ML-sht-Schedules.dgn

benesch
Alfred Benesch & Company
35 W Wacker Drive, Suite 3300
Chicago, Illinois 60601
312-565-0450 Job No. 10800.00

USER NAME = agibson	DESIGNED - A.GIBSON	REVISED -	
	DRAWN - A.GIBSON	REVISED -	
PLOT SCALE = 0.16666633 ' / in.	CHECKED - J.TARDY	REVISED -	
PLOT DATE = 2/6/2025	DATE -	REVISED -	

STATE OF ILLINOIS
DEPARTMENT OF TRANSPORTATION

SCHEDULE OF QUANTITIES

SCALE: 1"=1'-0" | SHEET OF 39 SHEETS | STA. TO STA.

F.A.I RTE.	SECTION	COUNTY	TOTAL SHEETS	SHEET NO.
*	(201-3)R & (4-1.5)R	WINNEBAGO	1685	84
		CONTRACT NO. 64C24		
	ILLINOIS	FED. AID PROJECT		

* FAI ROUTE 39 (I-39) & FAP 301 (US 20)

78300201										
PAVEMENT MARKING REMOVAL - GRINDING										
87% FED / 13% STATE										
ROAD	STA	LT/RT	STA	LT/RT	LINE TYPE (IN.)	DESCRIPTION	FACTOR	LENGTH	SQ FT	REMARKS
I-39										
EXISTING MARKINGS										
PR I39	2620+83.00	LT	2732+00.00	LT	4	SOLID YELLOW	1	11117	3,706	
PR I39	2620+83.00	LT	2732+00.00	LT	4	SOLID WHITE	1	11117	3,706	
PR I39	2620+83.00	LT	2732+00.00	LT	6	SKIP DASH	0.25	11117	1,390	
PR I39	2620+83.00	RT	2731+97.41	RT	4	SOLID WHITE	1	11114	3,705	
PR I39	2620+83.00	RT	2731+97.41	RT	4	SOLID YELLOW	1	11114	3,705	
PR I39	2620+83.00	RT	2731+97.41	RT	6	SKIP DASH	0.25	11114	1,389	
PRESTAGE										
PR I39	2611+06.19	LT	2718+19.72	LT	4	SOLID YELLOW	1	10712	3,571	
PR I39	2607+78.48	LT	2718+19.93	LT	4	SOLID WHITE	1	10747	3,582	
PR I39	2611+06.19	LT	2615+91.43	LT	4	SOLID WHITE	1	482	161	
PR I39	2607+78.48	LT	2638+00.00	LT	4	SOLID WHITE	1	3025	1,008	
PR I39	2607+78.48	LT	2615+91.43	LT	4	SOLID WHITE	1	833	278	
PR I39	2611+06.19	LT	2718+19.72	LT	6	SKIP DASH	0.25	10701	1,338	
PR I39	2638+00.00	LT	2641+00.07	LT	8	3'-9' SKIP DASH	0.25	298	50	
PR I39	2703+82.86	LT	2706+85.85	LT	8	3'-9' SKIP DASH	0.25	303	50	
PR I39	2619+92.47	RT	2648+79.38	RT	6	SKIP DASH	0.25	2907	363	
PR I39	2619+92.42	RT	2648+79.12	RT	4	SOLID WHITE	1	2913	971	
STAGE 1										
PR I39	2709+37.19	LT	2716+70.00	LT	4	SOLID WHITE	1	733	244	
PR I39	2712+64.00	LT	2716+70.00	LT	6	SKIP DASH	0.25	406	51	
PR I39	2712+64.00	LT	2716+70.00	LT	4	SOLID YELLOW	1	406	135	
STAGE 1B										
PR I39	2709+37.91	LT	2720+58.82	LT	4	SOLID WHITE	1	1209	403	
PR I39	2715+57.76	LT	2720+68.35	LT	4	SOLID YELLOW	1	590	197	
PR I39	2709+37.91	LT	2712+37.51	LT	8	3'-9' SKIP DASH	0.25	300	50	
								SUBTOTAL	30,052	
								GRAND TOTAL	**30,052**	

X6420100										
SHOULDER RUMBLE STRIP REMOVAL										
87% FED / 13% STATE										
ROAD	STA	LT/RT	STA	LT/RT	DESCRIPTION	WIDTH	LENGTH	SQ FT	SQ YD	REMARKS
I-39										
PRESTAGE										
PR I39	2644+57	LT	2647+31	LT	SB OUTSIDE SHOULDER	4	274	1096	122	
PR I39	2648+96	LT	2682+27	LT	SB OUTSIDE SHOULDER	4	3331	13324	1,480	
PR I39	2685+18	LT	2718+00	LT	SB OUTSIDE SHOULDER	4	3282	13128	1,459	
PR I39	2636+34	LT	2647+41	LT	SB INSIDE SHOULDER	4	1107	4428	492	
PR I39	2649+04	LT	2682+74	LT	SB INSIDE SHOULDER	4	3370	13480	1,498	
PR I39	2685+65	LT	2731+35	LT	SB INSIDE SHOULDER	4	4570	18280	2,031	
PR I39	2644+93	RT	2647+66	RT	NB OUTSIDE SHOULDER	4	273	1092	121	
PR I39	2649+32	RT	2683+79	RT	NB OUTSIDE SHOULDER	4	3447	13788	1,532	
PR I39	2686+61	RT	2708+00	RT	NB OUTSIDE SHOULDER	4	2139	8556	951	
PR I39	2713+77	RT	2722+00	RT	NB OUTSIDE SHOULDER	4	823	3292	366	
SUBTOTAL									10,052	
GRAND TOTAL									10,052	

MODEL: Schedules-37 [Sheet]
FILE NAME: c:\pwworkdir\benesch projects\projects\d0173723\D284C24-MI-sht-Schedules.dgn

benesch
Alfred Benesch & Company
35 W Wacker Drive, Suite 3300
Chicago, Illinois 60601
312-565-0450 Job No. 10890.00

USER NAME = agibson	DESIGNED - A.GIBSON	REVISED -	
	DRAWN - A.GIBSON	REVISED -	
PLOT SCALE = 0.16666633 ' / in.	CHECKED - J.TARDY	REVISED -	
PLOT DATE = 2/6/2025	DATE -	REVISED -	

STATE OF ILLINOIS
DEPARTMENT OF TRANSPORTATION

SCHEDULE OF QUANTITIES

SCALE: 1"=1'-0" | SHEET OF 39 SHEETS | STA. TO STA.

F.A.I RTE.	SECTION	COUNTY	TOTAL SHEETS	SHEET NO.
*	(201-3)R & (4-1.5)R	WINNEBAGO	1685	85
		CONTRACT NO. 64C24		
		ILLINOIS	FED. AID PROJECT	

* FAI ROUTE 39 (I-39) & FAP 301 (US 20)

78300202										
PAVEMENT MARKING REMOVAL - WATER BLASTING										
87% FED / 13% STATE										
ROAD	STA	LT/RT	STA	LT/RT	LINE TYPE (IN.)	DESCRIPTION	FACTOR	LENGTH	SQ FT	REMARKS
I-39										
EXISTING MARKINGS										
PR I39	2608+78.65	LT	2620+83.00	LT	4	SOLID WHITE/YELLOW	2	1195	797	
PR I39	2607+50.00	LT	2620+83.00	LT	4	SOLID YELLOW	1	1331	444	
PR I39	2607+50.00	LT	2620+83.00	LT	4	SOLID WHITE	1	1331	444	
PR I39	2607+50.00	LT	2620+83.00	LT	6	SKIP DASH	0.25	1331	166	
PR I39	2610+58.00	RT	2620+83.00	RT	6	SKIP DASH	0.25	1030	129	
PR I39	2610+58.00	RT	2620+18.00	RT	6	SKIP DASH	0.25	960	120	
PR I39	2610+58.00	RT	2620+83.00	RT	4	SOLID YELLOW	1	1030	343	
PR I39	2607+00.00	RT	2620+83.00	RT	4	SOLID WHITE	1	1392	464	
PR I39	2731+97.41	RT	2736+81.00	RT	4	SOLID YELLOW	1	488	163	
PR I39	2731+97.41	RT	2738+10.00	RT	4	SOLID WHITE	1	618	206	
PR I39	2730+29.00	RT	2736+34.00	RT	4	SOLID WHITE	1	618	206	
PR I39	2730+29.00	RT	2739+42.00	RT	4	SOLID WHITE	1	922	307	
PR I39	2731+97.41	RT	2736+81.00	RT	6	SKIP DASH	0.25	488	61	
STAGE 1										
PR I39	2608+78.65	LT	2620+83.00	LT	4	SOLID WHITE	1	1198	399	
PR I39	2608+78.65	LT	2615+74.18	LT	4	SOLID YELLOW/WHITE	1	691	230	
PR I39	2611+06.19	LT	2620+83.00	LT	4	SOLID WHITE	1	993	331	
PR I39	2608+78.65	LT	2611+06.19	LT	6	SKIP DASH	0.25	204	26	
PR I39	2608+48.45	LT	2615+74.18	LT	4	SOLID WHITE	1	251	84	
PR I39	2608+48.45	LT	2620+83.00	LT	4	SOLID YELLOW	1	1235	412	
PR I39	2608+48.45	LT	2620+83.00	LT	6	SKIP DASH	0.25	1235	154	
STAGE 1C										
PR I39	2693+51.90	LT	2720+58.34	LT	4	SOLID WHITE	1	2748	916	
PR I39	2699+67.08	LT	2708+91.20	LT	4	SOLID WHITE	1	925	308	
PR I39	2718+43.45	LT	2720+72.72	LT	6	SKIP DASH	0.25	239	30	
PR I39	2708+91.30	LT	2720+68.35	LT	4	SOLID YELLOW	1	1212	404	
PR I39	2735+00.00	LT	2742+04.91	LT	4	SOLID YELLOW	1	702	234	
PR I39	2735+00.00	LT	2738+50.00	LT	4	SOLID WHITE	1	348	116	
PR I39	2735+00.00	LT	2742+04.91	LT	6	SKIP DASH	0.25	712	89	
STAGE 2										
PR I39	2643+00.91	LT	2701+00.00	LT	4	SOLID YELLOW	1	5799	1,933	
PR I39	2647+00.00	LT	2701+00.00	LT	6	SKIP DASH	0.25	5400	675	
STAGE 2B										
PR I39	2607+50.01	LT	2707+83.50	LT	4	SOLID YELLOW	1	10004	3,335	
PR I39	2608+81.53	LT	2616+55.28	LT	4	SOLID YELLOW	1	771	257	
PR I39	2608+81.53	LT	2653+59.78	LT	4	SOLID WHITE	1	4425	1,475	
PR I39	2693+97.12	LT	2711+39.96	LT	4	SOLID WHITE	1	1743	581	
PR I39	2705+50.00	LT	2711+39.79	LT	4	SOLID WHITE	1	590	197	
PR I39	2607+50.01	LT	2616+55.28	LT	4	SOLID WHITE	1	901	300	
PR I39	2615+00.00	LT	2629+00.27	LT	4	SOLID WHITE	1	1388	463	
PR I39	2607+50.01	LT	2707+83.50	LT	6	SKIP DASH	0.25	9994	1,249	
PR I39	2693+97.12	LT	2705+50.00	LT	6	SKIP DASH	0.25	1153	144	
PR I39	2608+81.53	LT	2615+00.00	LT	6	SKIP DASH	0.25	613	77	
PR I39	2629+00.27	LT	2653+59.78	LT	8	3'-9' SKIP DASH	0.25	2434	406	
STAGE 3										
PR I39	2618+00.00	RT	2733+00.45	RT	4	SOLID WHITE	1	11500	3,833	
PR I39	2618+00.00	RT	2733+00.45	RT	4	SOLID YELLOW	1	11500	3,833	
PR I39	2618+00.00	RT	2733+00.45	RT	6	SKIP DASH	0.25	11500	1,438	
PR I39	2618+00.00	RT	2620+43.71	RT	6	SKIP DASH	0.25	244	30	
PR I39	2709+85.00	RT	2718+29.00	RT	4	SOLID WHITE	1	855	285	
PR I39	2714+18.00	RT	2718+29.00	RT	4	SOLID WHITE	1	443	148	
PR I39	2730+30.00	RT	2734+73.00	RT	4	SOLID WHITE	1	454	151	
STAGE 3B										
PR I39	2608+00.00	RT	2718+35.08	RT	4	SOLID WHITE	1	11100	3,700	
PR I39	2693+45.61	RT	2700+16.61	RT	4	SOLID WHITE	1	671	224	
PR I39	2700+16.61	RT	2718+89.67	RT	4	SOLID YELLOW	1	1907	636	
PR I39	2710+19.32	RT	2714+31.20	RT	4	SOLID WHITE	1	412	137	
PR I39	2607+00.02	RT	2673+00.01	RT	6	SKIP DASH	0.25	6625	828	
PR I39	2673+00.01	RT	2693+45.61	RT	8	3'-9' SKIP DASH	0.25	2044	341	
WINTER 1										
PR I39	2607+50.00	LT	2741+43.00	LT	4	SOLID YELLOW	1	13349	4,450	
PR I39	2607+49.72	LT	2614+97.79	LT	4	SOLID WHITE	1	745	248	
PR I39	2608+79.43	LT	2614+97.79	LT	4	SOLID WHITE	1	615	205	
PR I39	2608+79.43	LT	2713+27.00	LT	4	SOLID WHITE	1	10378	3,459	
PR I39	2711+84.07	LT	2713+29.32	LT	4	SOLID WHITE	1	190	63	
PR I39	2711+84.07	LT	2741+44.49	LT	4	SOLID WHITE	1	4125	1,375	
PR I39	2737+48.23	LT	2739+32.97	LT	4	SOLID WHITE	1	185	62	

78300202										
PAVEMENT MARKING REMOVAL - WATER BLASTING										
87% FED / 13% STATE										
ROAD	STA	LT/RT	STA	LT/RT	LINE TYPE (IN.)	DESCRIPTION	FACTOR	LENGTH	SQ FT	REMARKS
I-39										
WINTER 1										
PR I39	2614+97.79	LT	2630+79.73	LT	4	SOLID WHITE	1	1560	520	
PR I39	2607+50.00	LT	2741+44.00	LT	6	SKIP DASH	0.25	14469	1,809	
PR I39	2608+79.43	LT	2614+97.79	LT	6	SKIP DASH	0.25	613	77	
PR I39	2630+79.73	LT	2645+15.00	LT	8	3'-9' SKIP DASH	0.25	430	72	
PR I39	2701+81.09	LT	2711+84.07	LT	8	3'-9' SKIP DASH	0.25	958	160	
PR I39	2609+00.00	LT	2617+00.00	LT	12	GORE	1	535	535	
PR I39	2712+00.00	LT	2713+00.00	LT	12	GORE	1	39	39	
PR I39	2737+00.00	LT	2739+00.00	LT	12	GORE	1	44	44	
WINTER 2										
PR I39	2604+56.90	RT	2718+36.11	RT	4	SOLID WHITE	1	11452	3,817	
PR I39	2610+57.00	RT	2736+82.71	RT	4	SOLID YELLOW	1	12633	4,211	
PR I39	2714+31.20	RT	2718+49.61	RT	4	SOLID WHITE	1	456	152	
PR I39	2714+31.20	RT	2734+96.29	RT	4	SOLID WHITE	1	2076	692	
PR I39	2730+29.06	RT	2734+90.19	RT	4	SOLID WHITE	1	474	158	
PR I39	2730+34.70	RT	2736+77.85	RT	4	SOLID WHITE	1	671	224	
PR I39	2610+57.16	RT	2736+81.57	RT	6	SKIP DASH	0.25	12647	1,581	
PR I39	2610+57.32	RT	2620+00.13	RT	8	3'-9' SKIP DASH	0.25	948	158	
PR I39	2710+17.14	RT	2714+31.20	RT	8	3'-9' SKIP DASH	0.25	412	69	
PR I39	2734+99.45	RT	2736+79.96	RT	8	3'-9' SKIP DASH	0.25	208	35	
PR I39	2730+00.00	RT	2734+00.00	RT	12	GORE	1	140	140	
								SUBTOTAL	58,612	
US-20 / HARRISON AVE										
STAGE 1B										
PrUS20Har	149+19.74	LT	149+36.75	LT	4	SOLID YELLOW	1	23	8	
PrUS20Har	149+19.74	LT	1314+19.55	LT	4	SOLID WHITE	1	693	231	
PrUS20Har	150+01.65	LT	1313+56.58	LT	4	SOLID YELLOW	1	546	182	
PrUS20Har	150+15.16	RT	1314+15.88	RT	4	SOLID WHITE	1	600	200	
PrUS20Har	152+00.00	RT	1312+99.97	RT	4	SOLID YELLOW	1	296	99	
PrUS20Har	1313+69.63	LT	1314+19.18	LT	4	SOLID WHITE	1	49	16	
PrUS20Har	149+17.48	RT	1313+69.63	RT	6	SKIP DASH	0.25	645	81	
PrUS20Har	150+15.08	LT	1314+15.72	LT	6	SKIP DASH	0.25	602	75	
PrUS20Har	149+36.75	LT	150+01.73	LT	6	3'-9' SKIP DASH	0.25	64	8	
PrUS20Har	150+14.99	RT	152+16.54	RT	6	3'-9' SKIP DASH	0.25	204	26	
PrUS20Har	1312+69.53	LT	1314+42.39	LT	6	3'-9' SKIP DASH	0.25	171	21	
STAGE 3B										
PrUS20Har	151+06.48	LT	1314+20.87	LT	4	SOLID WHITE	1	511	170	
PrUS20Har	151+06.48	LT	1313+02.66	LT	4	SOLID YELLOW	1	387	129	
PrUS20Har	151+06.48	LT	1314+20.87	LT	6	SKIP DASH	0.25	509	64	
PrUS20Har	1313+02.66	LT	1314+20.87	LT	8	3'-9' SKIP DASH	0.25	120	20	
PrUS20Har	152+10.72	RT	1313+33.17	RT	4	SOLID YELLOW	1	321	107	
PrUS20Har	150+61.06	RT	1313+78.19	RT	6	SKIP DASH	0.25	515	64	
PrUS20Har	150+61.06	RT	1313+78.19	RT	4	SOLID WHITE	1	516	172	
PrUS20Har	151+99.15	RT	152+10.72	RT	8	3'-9' SKIP DASH	0.25	113	19	
STAGE 3C										
PrUS20Har	148+69.56	LT	1315+73.67	LT	4	SOLID WHITE	1	863	288	
PrUS20Har	149+50.92	LT	1314+20.79	LT	4	SOLID YELLOW	1	614	205	
PrUS20Har	148+69.00	LT	1314+42.00	LT	6	SKIP DASH	0.25	1000	125	
PrUS20Har	1312+57.78	LT	1314+42.13	LT	6	3'-9' SKIP DASH	0.25	210	26	
								SUBTOTAL	2,336	
								GRAND TOTAL	**60,948**	

NOTE: SEE ROADWAY SCHEDULES FOR ADDITIONAL QUANTITY.

MODEL: Schedules-38 [Sheet]
FILE NAME: c:\pwworkfi\benesch projects\projects\d0173723\D264C24-MLs-sht-Schedules.dgn

benesch
Alfred Benesch & Company
35 W Wacker Drive, Suite 3200
Chicago, Illinois 60601
312-565-0450 Job No. 10800.00

USER NAME = agibson	DESIGNED - A.GIBSON	REVISED -	
	DRAWN - A.GIBSON	REVISED -	
PLOT SCALE = 0.16666633 ' / in.	CHECKED - J.TARDY	REVISED -	
PLOT DATE = 2/6/2025	DATE -	REVISED -	

STATE OF ILLINOIS
DEPARTMENT OF TRANSPORTATION

SCHEDULE OF QUANTITIES

SCALE: 1"=1'-0" | SHEET OF 39 SHEETS | STA. TO STA.

F.A.I RTE.	SECTION	COUNTY	TOTAL SHEETS	SHEET NO.
*	(201-3)R & (4-1.5)R	WINNEBAGO	1685	86
		CONTRACT NO. 64C24		
		ILLINOIS	FED. AID PROJECT	

* FAI ROUTE 39 (I-39) & FAP 301 (US 20)

52200020								
TEMPORARY SOIL RETENTION SYSTEM								
87% FED / 13% STATE								
ROAD	STA	LT/RT	STA	LT/RT	LENGTH (FT)	HEIGHT (FT)	SQ FT	REMARKS
Stage 1/1B								
PR I-39	2646+60	LT	2653+80	LT	560	2.80	1,568	
PR I-39	2685+00	LT	2687+20	LT	220	2.00	440	
PR I-39	2703+90	LT	2710+10	LT	620	2.30	1,426	
STAGE 2/2B								
PR I-39	2645+20	RT	2655+20	RT	840	3.30	2,772	
PR I-39	2681+90	RT	2687+80	RT	390	2.00	780	
PR I-39	2703+50	RT	2710+40	RT	690	2.50	1,725	
PR I-39	2722+80	RT	2725+00	RT	60	2.50	150	
						SUBTOTAL	8,861	
						GRAND TOTAL	8,861	
NOTE: SEE DRAINAGE SCHEDULES AND VARIOUS STRUCTURAL BILL OF MATERIALS FOR ADDITIONAL QUANTITIES.								

X4810110								
TEMPORARY AGGREGATE WEDGE								
87% FED / 13% STATE								
ROAD	STA	LT/RT	STA	LT/RT	LENGTH	CY	TONS	REMARKS
I-39								
WINTER STAGE 1								
PR I-39	2620+83	LT	2644+99	LT	2416	895	1611	
PR I-39	2660+94	LT	2670+84	LT	990	367	660	
PR I-39	2711+63	LT	2720+83	LT	920	341	614	
PR I-39	2730+02	LT	2732+35	LT	233	86	156	
WINTER STAGE 2								
PR I-39	2620+83	RT	2643+69	RT	2286	677	1220	
PR I-39	2655+44	RT	2678+49	RT	2305	683	1230	
PR I-39	2688+00	RT	2702+44	RT	1444	428	771	
PR I-39	2716+12	RT	2721+29	RT	517	153	276	
PR I-39	2727+01	RT	2731+98	RT	497	147	266	
						SUBTOTAL	6804	
						GRAND TOTAL	6804	

MODEL: Schedules-39 [Sheet]
FILE NAME: c:\pwworking\benesch projects\projects\d0173723\D264C24-MI-sht-Schedules.dgn

benesch
Alfred Benesch & Company
35 W Wacker Drive, Suite 3300
Chicago, Illinois 60601
312-565-0450 Job No. 10800.00

USER NAME = agibson	DESIGNED - A.GIBSON	REVISED -	
	DRAWN - A.GIBSON	REVISED -	
PLOT SCALE = 0.16666633 ' / in.	CHECKED - J.TARDY	REVISED -	
PLOT DATE = 2/6/2025	DATE -	REVISED -	

STATE OF ILLINOIS
DEPARTMENT OF TRANSPORTATION

SCHEDULE OF QUANTITIES

SCALE: 1"=1'-0" | SHEET OF 39 SHEETS | STA. TO STA.

F.A.I RTE.	SECTION	COUNTY	TOTAL SHEETS	SHEET NO.
*	(201-3)R & (4-1.5)R	WINNEBAGO	1685	87
		CONTRACT NO. 64C24		
	ILLINOIS	FED. AID PROJECT		

* FAI ROUTE 39 (I-39) & FAP 301 (US 20)

BENCHMARKS						
POINT	LATITUDE	LONGITUDE	NORTHING	EASTING	ELEVATION	DESCRIPTION
AH3054	42°12'01.1"	89°01'16.6"	2017599.0383	2606927.9045	841.56	NGS Station WIN 39-1A a NGS 3D monument 15 feet south of the south edge of the center median turn around for I-39. Record Elevation from level circuit FAI 39 BMK G-130 to T-222 of 841.560 was Held.
400	42°13'23.1"	88°59'02.4"	2026037.4097	2616913.3749	800.521	Found cut square on southeast corner of Northbound I39 bridge over the CN Railroad. Record Elevation from US20_Rckfrd Level summary was 800.5206.
402	42°13'11.4"	89°00'59.2"	2024732.8235	2608141.5275	832.235	Found chiseled square on north headwall on I-39 southbound ramp of US Rte. 20 eastbound approximately 0.5 mile east of South Alpine Road.
UP402	42°13'49.6"	88°58'30.0"	2028753.8478	2619313.5946	796.686	Found cut square on southeast corner of the I39 northbound bridge over the UP Railroad.
403	42°13'12.7"	89°00'39.9"	2024884.0552	2609591.9157	829.244	Found chiseled square in the middle of the center pier (crash wall) of a I-39 bridge over US Rte. 20.
404	42°14'03.3"	88°58'14.3"	2030157.1892	2620475.2384	758.552	Found cut square on foundation of westerly leg of Belvidere 1/2 mile, "Exit sign 122A" on I39 North.
405	42°14'10.2"	88°58'06.7"	2030863.6799	2621037.1297	770.671	Found cut "x" on northwest bolt of east end of the overhead sign for "Belvidere Exit 122A "on exit ramp on I39 North.
ASE403	42°13'17.4"	88°59'17.2"	2025445.0004	2615807.8252	798.355	Set cut "X" on median leg of overhead sign (southbound I39), 1200 feet west of the CN Railroad.
ASE404	42°13'24.6"	88°59'01.4"	2026190.2925	2616986.5062	799.611	Set cut "x" on the Northeast corner of southbound I39 bridge over the CN Railroad.
ASE405	42°13'51.4"	88°58'29.2"	2028936.8962	2619371.2303	795.369	Set cut "x" on the Northeast corner of I39 South bound bridge over the UP Railroad.
ASE406	42°14'14.1"	88°57'52.4"	2031273.6099	2622107.2471	779.558	Set cut "X" on 2nd light pole base on US Rte. 20 eastbound off ramp from I39 North. Field verify, 64R71 construction may have affected location.
ASE408	42°14'21.8"	88°57'54.5"	2032050.8245	2621938.2927	781.368	Cut "X" on bolt of large sign for I90/I39 South to Freeport/Bloomington. Field verify, 64R71 construction may have affected location.
ASE409	42°14'21.1"	88°57'59.8"	2031974.3488	2621540.6300	781.189	Cut "X" on large sign foundation for I90/I39 North to Chicago/Wisconsin. Field verify, 64R71 construction may have affected location.
ASE412	42°14'20.4"	88°57'58.3"	2031905.0795	2621654.4569	801.344	Cut "X" on southeast corner of the bridge wall for I39 South bound lane over Harrison Ave.
ASE413	42°14'23.4"	88°57'54.7"	2032212.5744	2621920.9655	800.451	Set cut "x" on the sign foundation Exit 122B from I39 northbound to Harrison Ave. Field verify, 64R71 construction may have affected location.
ASE416	42°14'34.9"	88°57'48.7"	2033383.0444	2622355.8406	801.254	Found cut square on overhead sign foundation, median side of Exit 122A to Harrison Ave, on I39 South. Field verify, 64R71 construction may have affected location.

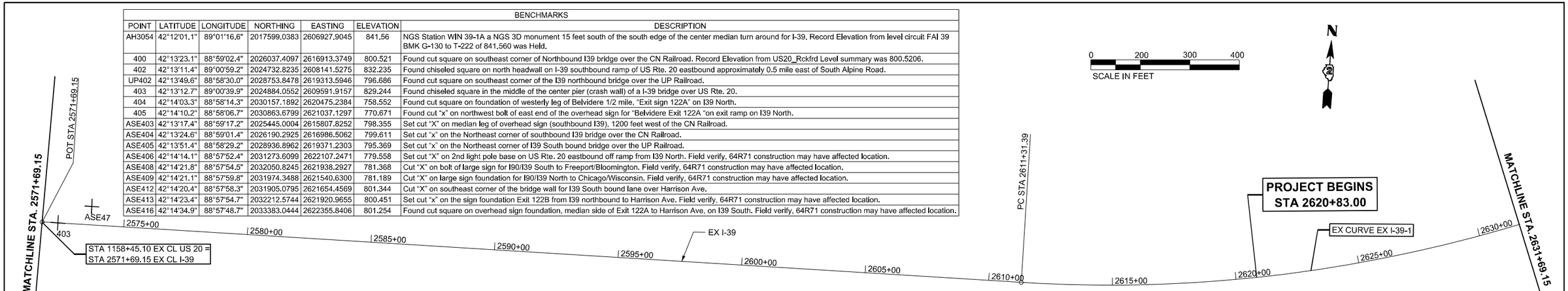

CONTROL POINTS				
POINT	NORTHING	EASTING	ELEVATION	DESCRIPTION
5	2019093.8719	2608492.9242	817.338	112–PSM
90174	2019604.7983	2609071.7098	814.293	112–5/8 REBAR
ASE1	2032186.4903	2620787.5656	773.007	112–PIN W/RED CAP, FIELD VERIFY, 64R71 CONSTRUCTION MAY HAVE AFFECTED LOCATION
ASE44	2024812.6852	2608700.5483	832.453	112–PIN W/CAP
ASE45	2024924.2506	2608697.4758	832.441	112–PIN W/CAP
ASE47	2024960.5215	2609723.5301	825.921	112–PIN W/CAP
ASE48	2024308.0207	2608485.3856	852.01	112–5/8 REBAR
ASE50	2023152.0011	2608770.2572	858.851	112–5/8 REBAR
ASE51	2023160.8137	2608806.9695	859.258	112–PIN W/CAP
DE7371	2023897.0786	2616112.6648	797.36	112–NGS

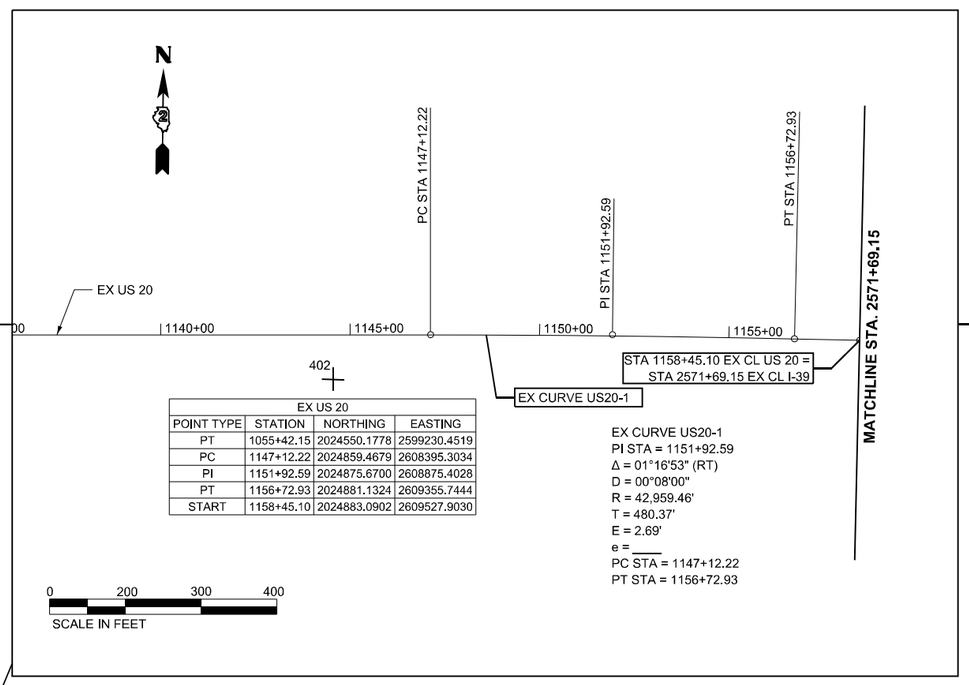

EX US 20			
POINT TYPE	STATION	NORTHING	EASTING
PT	1055+42.15	2024550.1778	2599230.4519
PC	1147+12.22	2024859.4679	2608395.3034
PI	1151+92.59	2024875.6700	2608875.4028
PT	1156+72.93	2024881.1324	2609355.7444
START	1158+45.10	2024883.0902	2609527.9030

EX CURVE US20-1
PI STA = 1151+92.59
Δ = 01°16'53" (RT)
D = 00°08'00"
R = 42,959.46'
T = 480.37'
E = 2.69'
e = ____
PC STA = 1147+12.22
PT STA = 1156+72.93

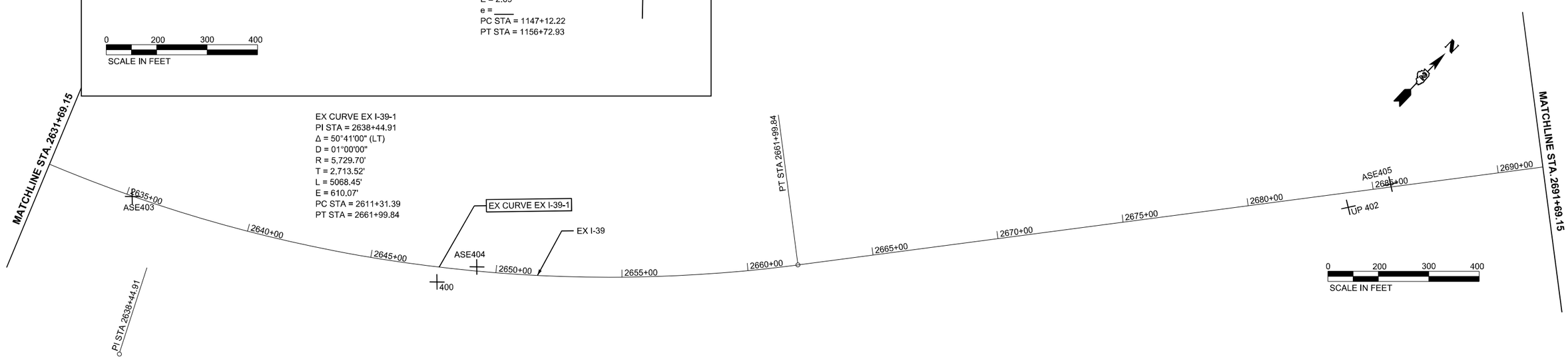

EX CURVE EX I-39-1
PI STA = 2638+44.91
Δ = 50°41'00" (LT)
D = 01°00'00"
R = 5,729.70'
T = 2,713.52'
L = 5068.45'
E = 610.07'
PC STA = 2611+31.39
PT STA = 2661+99.84

MODEL: I39 Align and Tie - Plan 1 [Sheet]
FILE NAME: c:\pwworkfr\benesch projects\projects\d017379\D284C24-ML-sht-ExAlignTies.dgn

benesch
Alfred Benesch & Company
35 W Wacker Drive, Suite 3300
Chicago, Illinois 60601
312-565-0450 Job No. 10600.00

USER NAME = agibson	DESIGNED - A.GIBSON	REVISED -	
	DRAWN - T.BLANK	REVISED -	
PLOT SCALE = $SCALE$	CHECKED - J.TARDY	REVISED -	
PLOT DATE = 2/6/2025	DATE - 02/14/2025	REVISED -	

STATE OF ILLINOIS
DEPARTMENT OF TRANSPORTATION

EXISTING ALIGNMENT AND TIES

SCALE: 1"=200' | SHEET 1 OF 9 SHEETS | STA. 2571+69.15 TO STA. 2691+69.15

F.A.I RTE.	SECTION	COUNTY	TOTAL SHEETS	SHEET NO.
*	(201-3)R & (4-1.5)R	WINNEBAGO	1685	88
	CONTRACT NO. 64C24			
	ILLINOIS	FED. AID PROJECT		

* FAI ROUTE 39 (I-39) & FAP 301 (US 20)

EX CURVE EX I-39-2
PI STA = 2724+10.28
Δ = 17°40'00" (LT)
D = 00°50'00"
R = 6,875.65'
T = 1,068.50'
L = 2120.05'
E = 82.53'
PC STA = 2713+41.77
PT STA = 2734+61.82

EX CURVE EX I-39-3
PI STA = 308+78.77
Δ = 13°43'25" (RT)
D = 06°51'42"
R = 835.00'
T = 100.48'
L = 200.00'
E = 6.02'
PC STA = 307+78.29
PT STA = 309+78.29

EX CURVE EX I-39-4
PI STA = 1311+92.30
Δ = 17°55'04" (LT)
D = 01°00'00"
R = 5,729.71'
T = 903.28'
L = 1791.81'
E = 70.76'
PC STA = 144+84.47
PT STA = 1320+80.83

EX CURVE RAMP C-2
PI STA = 315+48.36
Δ = 22°27'12" (LT)
D = 14°28'07"
R = 396.00'
T = 78.60'
L = 155.19'
E = 7.73'
e = 6.0%
PC STA = 314+69.76
PT STA = 316+24.94

EX CURVE RAMP C-1-A
PI STA = 308+78.77
Δ = 13°43'25" (RT)
D = 06°51'42"
R = 835.00'
T = 100.48'
L = 200.00'
E = 6.02'
e = ____
PC STA = 307+78.29
PT STA = 309+78.29

EX CURVE RAMP C-1
PI STA = 311+13.88
Δ = 23°13'09" (RT)
D = 08°40'52"
R = 660.00'
T = 135.59'
L = 267.47'
E = 13.78'
e = 6.0%
PC STA = 309+78.29
PT STA = 312+45.76

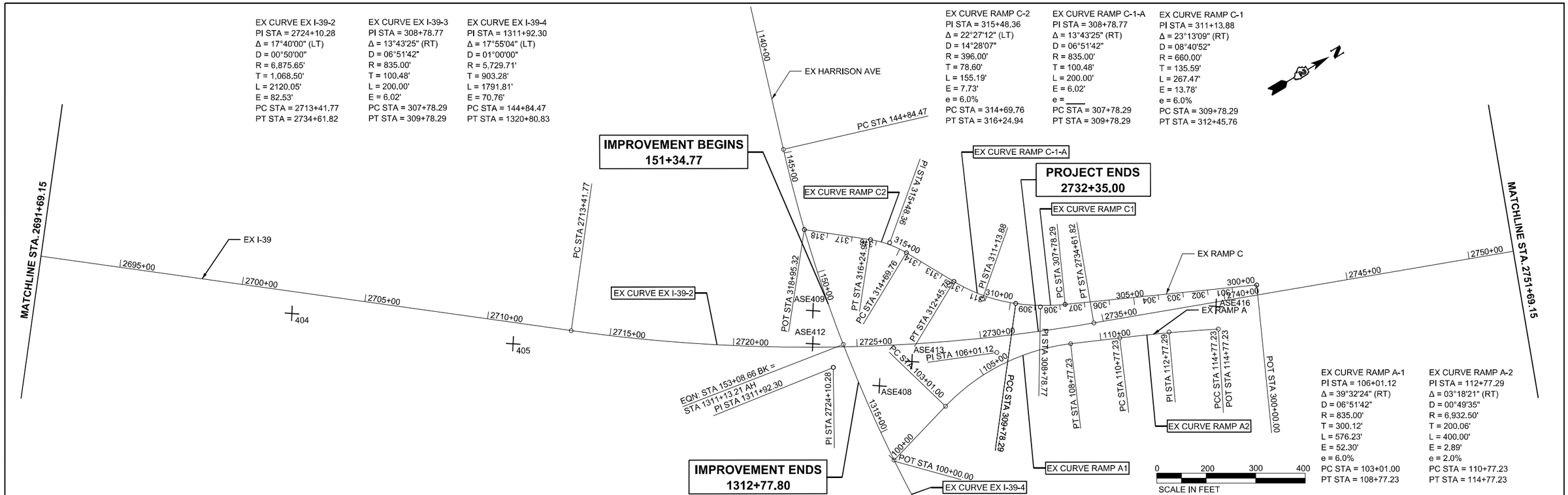

EX CURVE RAMP A-1
PI STA = 106+01.12
Δ = 39°32'24" (RT)
D = 06°51'42"
R = 835.00'
T = 300.12'
L = 576.23'
E = 52.30'
e = 6.0%
PC STA = 103+01.00
PT STA = 108+77.23

EX CURVE RAMP A-2
PI STA = 112+77.29
Δ = 03°18'21" (RT)
D = 00°49'35"
R = 6,932.50'
T = 200.06'
L = 400.00'
E = 2.89'
e = 2.0%
PC STA = 110+77.23
PT STA = 114+77.23

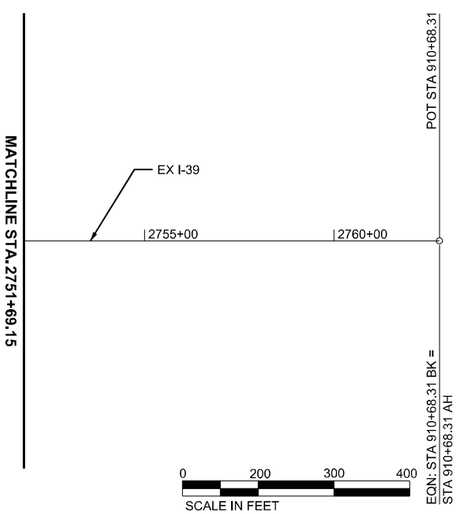

COORDINATE DATA - EX I-39

Point Type	Station	Northing	Easting	Radius	Length	Tangent
START	2571+69.15	2024883.09	2609527.903			
HPI	2571+69.15	2024883.09	2609527.903			
PC	2611+31.39	2024928.146	2613489.89			
PC	2611+31.39	2024928.146	2613489.89			
HPI	2638+44.91	2024959.002	2616203.233	5729.705	5068.445	2713.518
PT	2661+99.84	2027077.747	2617898.551			
PT	2661+99.84	2027077.747	2617898.551			
PC	2713+41.77	2031092.624	2621111.064			
PC	2713+41.77	2031092.624	2621111.064			
HPI	2724+10.28	2031926.923	2621778.63	6875.645	2120.05	1068.504
PT	2734+61.82	2032924.468	2622161.521			
END	2734+61.82	2032924.468	2622161.521			

COORDINATE DATA - RAMP A

Point Type	Station	Northing	Easting	Radius	Length	Tangent
START	100+00.00	2031947.949	2622226.022			
PC	103+01.00	2032237.832	2622144.983			
PC	103+01.00	2032237.832	2622144.983			
HPI	106+01.12	2032526.873	2622064.179	835	576.234	300.124
PT	108+77.23	2032801.217	2622185.872			
PT	108+77.23	2032801.217	2622185.872			
PC	110+77.23	2032984.038	2622266.968			
PC	110+77.23	2032984.038	2622266.968			
HPI	112+77.29	2033166.91	2622348.086	6932.498	400	200.056
PT	114+77.23	2033344.8	2622439.615			

COORDINATE DATA - RAMP C

Point Type	Station	Northing	Easting	Radius	Length	Tangent
START	300+00.00	2033568.921	2622365.585			
PC	307+78.29	2032862.93	2622038			
PC	307+78.29	2032862.93	2622038			
HPI	308+78.77	2032771.783	2621995.708	835	200	100.481
PCC	309+78.29	2032693.272	2621932.999			
PCC	309+78.29	2032693.272	2621932.999			
HPI	311+13.88	2032587.325	2621848.376	660	267.467	135.594
PT	312+45.76	2032523.321	2621728.838			
PT	312+45.76	2032523.321	2621728.838			
PC	314+69.76	2032417.589	2621531.363			
PC	314+69.76	2032417.589	2621531.363			
HPI	315+48.36	2032380.487	2621462.068	396	155.187	78.602
PT	316+24.94	2032319.732	2621412.197			
PT	316+24.94	2032319.732	2621412.197			
END	318+95.32	2032110.743	2621240.647			

MODEL: I39 Align and Tie - Plan 3 [Sheet]
FILE NAME: c:\pwworkl\benesch projects\projects\d0173797\D264C24-ML-sht-ExAlignTies.dgn

benesch
Alfred Benesch & Company
35 W Wacker Drive, Suite 3300
Chicago, Illinois 60601
312-565-0450 Job No. 10800.00

USER NAME = jMajcher	DESIGNED - A.GIBSON	REVISED -	
	DRAWN - T.BLANK	REVISED -	
PLOT SCALE = $SCALE$	CHECKED - J.TARDY	REVISED -	
PLOT DATE = 9/12/2024	DATE - 02/14/2025	REVISED -	

STATE OF ILLINOIS
DEPARTMENT OF TRANSPORTATION

EXISTING ALIGNMENT AND TIES

SCALE: 1"=200' | SHEET 2 OF 9 SHEETS | STA. 2691+69.15 TO STA. 2811+69.15

F.A.I RTE.	SECTION	COUNTY	TOTAL SHEETS	SHEET NO.
*	(201-3)R & (4-1.5)R	WINNEBAGO	1685	89
		CONTRACT NO. 64C24		
	ILLINOIS	FED. AID PROJECT		

* FAI ROUTE 39 (I-39) & FAP 301 (US 20)

EX CURVE DDI EB1
PI STA = 3003+91.04
Δ = 09°55'05" (RT)
D = 11°35'54"
R = 494.00'
T = 42.86'
E = 1.86'
e = 2.0%
TR = 61.05'
SE RUN = 62.00'
PC STA = 3003+48.18
PT STA = 3004+33.69

EX CURVE DDI EB2
PI STA = 3005+63.13
Δ = 30°47'40" (LT)
D = 12°11'26"
R = 470.00'
T = 129.44'
E = 17.50'
e = 2.0%
TR = 61.05'
SE RUN = _62.00'
PC STA = 3004+33.69
PT STA = 3006+86.30

EX CURVE DDI EB3
PI STA = 3008+95.20
Δ = 25°14'00" (RT)
D = 11°35'54"
R = 494.00'
T = 110.57'
E = 12.22'
e = 2.0%
TR = 61.05'
SE RUN = 62.00'
PC STA = 3007+84.62
PT STA = 3010+02.18

EX CURVE DDI EB4
PI STA = 3010+48.98
Δ = 11°22'20" (LT)
D = 12°11'26"
R = 470.00'
T = 46.80'
E = 2.32'
e = 2.0%
TR = 61.05'
SE RUN = 62.00'
PC STA = 3010+02.18
PT STA = 3010+95.47

EX CURVE DDI EB5
PI STA = 3012+28.33
Δ = 02°40'19" (LT)
D = 01°00'21"
R = 5,696.68'
T = 132.86'
E = 1.55'
e = 2.0%
TR = 61.05'
SE RUN = 62.00'
PC STA = 3010+95.47
PT STA = 3013+61.13

EX CURVE DDI EB6
PI STA = 3014+07.93
Δ = 11°22'20" (LT)
D = 12°11'26"
R = 470.00'
T = 46.80'
E = 2.32'
e = 2.32'
TR = 61.05'
SE RUN = 62.00'
PC STA = 3013+61.13
PT STA = 3014+54.42

EX CURVE DDI EB7
PI STA = 3015+67.17
Δ = 25°42'48" (RT)
D = 11°35'54"
R = 494.00'
T = 112.75'
E = 12.70'
e = 2.0%
TR = 61.05'
SE RUN = 62.00'
PC STA = 3014+54.42
PT STA = 3016+76.12

EX CURVE DDI EB8
PI STA = 3018+79.03
Δ = 27°27'47" (LT)
D = 12°11'26"
R = 470.00'
T = 114.85'
E = 13.83'
e = 2.0%
TR = 61.05'
SE RUN = 62.00'
PC STA = 3017+64.18
PT STA = 3019+89.46

EX CURVE DDI EB9
PI STA = 3020+90.91
Δ = 04°53'30" (RT)
D = 05°31'50"
R = 1,036.00'
T = 44.25'
E = 0.94'
e = 2.0%
TR = 61.05'
SE RUN = 62.00'
PC STA = 3020+46.66
PT STA = 3021+35.11

EX CURVE US20/HAR 3
PI STA = 1311+92.30
Δ = 17°55'04" (LT)
D = 01°00'00"
R = 5,729.71'
T = 903.28'
E = 70.76'
e = N/A
TR = N/A
SE RUN = N/A
PC STA = 144+84.47
PT STA = 1320+80.83

EX CURVE US20/HAR 4
PI STA = 1351+41.70
Δ = 02°10'17" (RT)
D = 00°24'23"
R = 14,100.00'
T = 267.22'
E = 2.53'
e = N/A
TR = N/A
SE RUN = N/A
PC STA = 1348+74.48
PT STA = 1354+08.85

EX CURVE US20/HAR 5
PI STA = 1356+85.51
Δ = 01°58'52" (LT)
D = 00°21'29"
R = 16,000.00'
T = 276.65'
E = 2.39'
e = N/A
TR = N/A
SE RUN = N/A
PC STA = 1354+08.85
PT STA = 1359+62.11

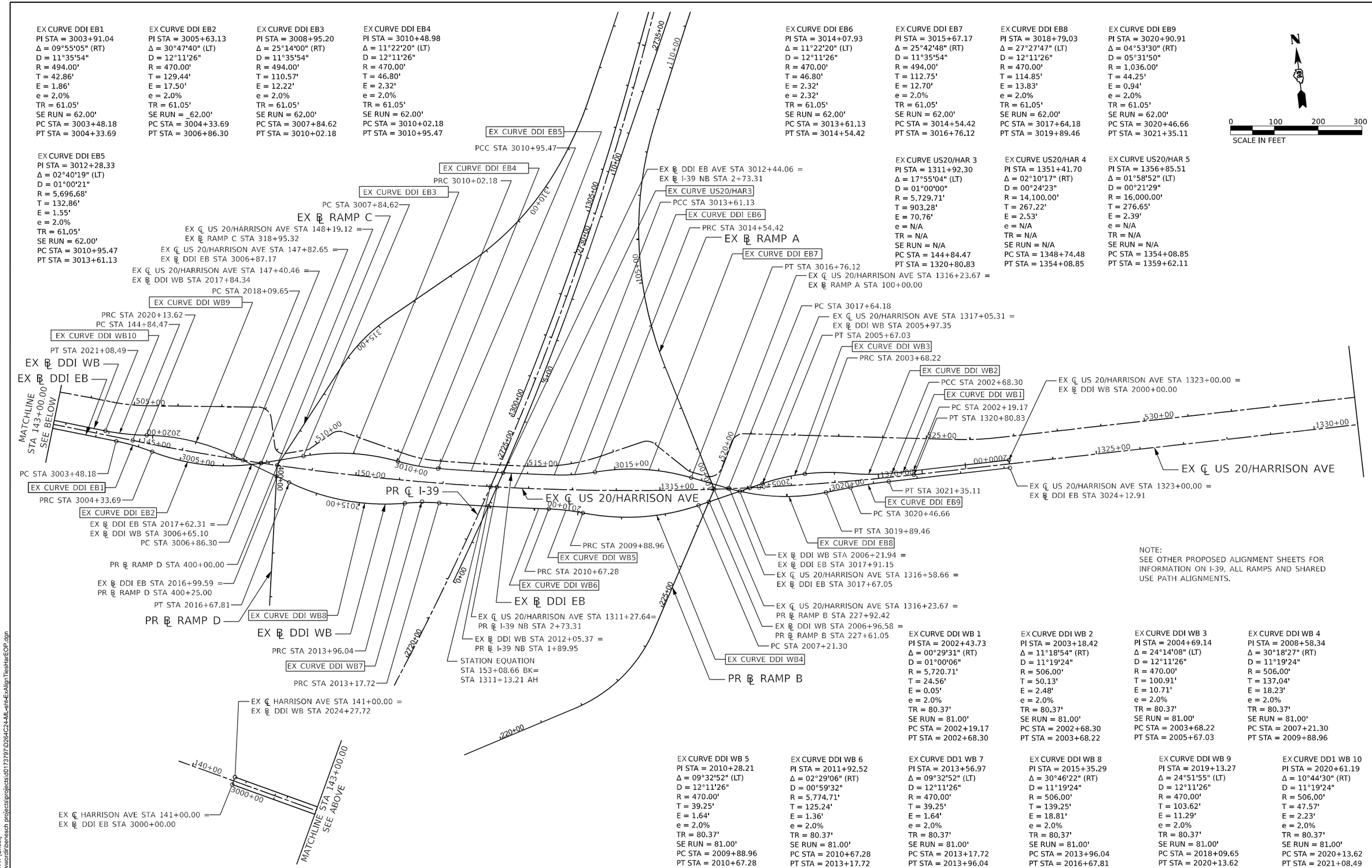

NOTE:
SEE OTHER PROPOSED ALIGNMENT SHEETS FOR INFORMATION ON I-39, ALL RAMPS AND SHARED USE PATH ALIGNMENTS.

EX CURVE DDI WB 1
PI STA = 2002+43.73
Δ = 00°29'31" (RT)
D = 01°00'06"
R = 5,720.71'
T = 24.56'
E = 0.05'
e = 2.0%
TR = 80.37'
SE RUN = 81.00'
PC STA = 2002+19.17
PT STA = 2002+68.30

EX CURVE DDI WB 2
PI STA = 2003+18.42
Δ = 11°18'54" (RT)
D = 11°19'24"
R = 506.00'
T = 50.13'
E = 2.48'
e = 2.0%
TR = 80.37'
SE RUN = 81.00'
PC STA = 2002+68.30
PT STA = 2003+68.22

EX CURVE DDI WB 3
PI STA = 2004+69.14
Δ = 24°14'08" (LT)
D = 12°11'26"
R = 470.00'
T = 100.91'
E = 10.71'
e = 2.0%
TR = 80.37'
SE RUN = 81.00'
PC STA = 2003+68.22
PT STA = 2005+67.03

EX CURVE DDI WB 4
PI STA = 2008+58.34
Δ = 30°18'27" (RT)
D = 11°19'24"
R = 506.00'
T = 137.04'
E = 18.23'
e = 2.0%
TR = 80.37'
SE RUN = 81.00'
PC STA = 2007+21.30
PT STA = 2009+88.96

EX CURVE DDI WB 5
PI STA = 2010+28.21
Δ = 09°32'52" (LT)
D = 12°11'26"
R = 470.00'
T = 39.25'
E = 1.64'
e = 2.0%
TR = 80.37'
SE RUN = 81.00'
PC STA = 2009+88.96
PT STA = 2010+67.28

EX CURVE DDI WB 6
PI STA = 2011+92.52
Δ = 02°29'06" (RT)
D = 00°59'32"
R = 5,774.71'
T = 125.24'
E = 1.36'
e = 2.0%
TR = 80.37'
SE RUN = 81.00'
PC STA = 2010+67.28
PT STA = 2013+17.72

EX CURVE DD1 WB 7
PI STA = 2013+56.97
Δ = 09°32'52" (LT)
D = 12°11'26"
R = 470.00'
T = 39.25'
E = 1.64'
e = 2.0%
TR = 80.37'
SE RUN = 81.00'
PC STA = 2013+17.72
PT STA = 2013+96.04

EX CURVE DDI WB 8
PI STA = 2015+35.29
Δ = 30°46'22" (RT)
D = 11°19'24"
R = 506.00'
T = 139.25'
E = 18.81'
e = 2.0%
TR = 80.37'
SE RUN = 81.00'
PC STA = 2013+96.04
PT STA = 2016+67.81

EX CURVE DDI WB 9
PI STA = 2019+13.27
Δ = 24°51'55" (LT)
D = 12°11'26"
R = 470.00'
T = 103.62'
E = 11.29'
e = 2.0%
TR = 80.37'
SE RUN = 81.00'
PC STA = 2018+09.65
PT STA = 2020+13.62

EX CURVE DD1 WB 10
PI STA = 2020+61.19
Δ = 10°44'30" (RT)
D = 11°19'24"
R = 506.00'
T = 47.57'
E = 2.23'
e = 2.0%
TR = 80.37'
SE RUN = 81.00'
PC STA = 2020+13.62
PT STA = 2021+08.49

MODEL: EX HAR AT [Sheet]
FILE NAME: c:\pwworking\benesch projects\projects\d0173797\D264C214-ML-sht-ExAlignTiesHarEOP.dgn

benesch
Alfred Benesch & Company
35 W Wacker Drive, Suite 3300
Chicago, Illinois 60601
312-565-0450 Job No. 10800.00

USER NAME = lfranceschina	DESIGNED - A.GIBSON	REVISED -	
	DRAWN - T.BLANK	REVISED -	
PLOT SCALE = $SCALE$	CHECKED - J.TARDY	REVISED -	
PLOT DATE = 8/12/2024	DATE - 02/14/2025	REVISED -	

STATE OF ILLINOIS
DEPARTMENT OF TRANSPORTATION

EXISTING ALIGNMENT AND TIES

SCALE: Full Size 1 = 1 | SHEET 3 OF 9 SHEETS | STA. TO STA.

F.A.I RTE.	SECTION	COUNTY	TOTAL SHEETS	SHEET NO.
*	(201-3)R & (4-1.5)R	WINNEBAGO	1685	90
		CONTRACT NO. 64C24		
	ILLINOIS	FED. AID PROJECT		

* FAI ROUTE 39 (I-39) & FAP 301 (US 20)

EX US 20 / HARRISON AVE			
POINT TYPE	STATION	NORTHING	EASTING
START (POT)	80+28.35	2031654.7716	2614731.7254
PC	99+99.36	2031715.7402	2616701.7906
PI	104+93.42	2031731.0229	2617195.6175
PT	109+66.30	2031983.8014	2617620.1188
PC	117+26.30	2032372.6414	2618273.1139
PI	125+86.63	2032812.8133	2619012.3127
PT	133+42.97	2032550.8525	2619831.7899
PC	144+84.47	2032203.2761	2620919.0934
PI	153+87.75	2031928.2382	2621779.4791
EQ STA	153+08.66	2032009.5500	2621719.4590
EQ STA	1311+13.21	2032009.5500	2621719.4590
PT	1320+80.83	2031931.2375	2622682.7511
PC	1348+74.48	2031940.5137	2625476.3842
PI	1351+41.70	2031941.4010	2625743.6014
PRC	1354+08.85	2031932.1628	2626010.6604
PI	1356+85.51	2031922.5985	2626287.1494
PT	1359+62.11	2031922.5985	2626563.8038
END (POT)	1362+20.89	2031922.5985	2626822.5839

EX DDI EB			
POINT TYPE	STATION	NORTHING	EASTING
START (POT)	3000+00.00	2032311.7711	2620550.1370
PC	3003+48.18	2032205.7549	2620881.7814
PI	3003+91.04	2032192.7034	2620922.6098
PRC	3004+33.69	2032172.8146	2620960.5800
PI	3005+63.13	2032112.7565	2621075.2388
PT	3006+86.30	2032119.8667	2621204.4792
PC	3007+84.62	2032125.2679	2621302.6540
PI	3008+95.20	2032131.3420	2621413.0598
PRC	3010+02.18	2032089.7700	2621515.5200
PI	3010+48.98	2032072.1756	2621558.8840
PCC	3010+95.47	2032063.4772	2621604.8659
PI	3012+28.33	2032038.7831	2621735.4061
PCC	3013+61.13	2032020.2013	2621866.9556
PI	3014+07.93	2032013.6560	2621913.2930
PRC	3014+54.42	2032016.3761	2621960.0112
PI	3015+67.17	2032022.9297	2622072.5690
PT	3016+76.12	2031979.9988	2622176.8242
PC	3017+64.18	2031946.4670	2622258.2542
PI	3018+79.03	2031902.7368	2622364.4504
PT	3019+89.46	2031912.9098	2622478.8466
PC	3020+46.66	2031917.9761	2622535.8173
PI	3020+90.91	2031921.8958	2622579.8941
PT	3021+35.11	2031922.0427	2622624.1446
END (POT)	3024+12.91	2031922.9652	2622901.9496

EX DDI WB			
POINT TYPE	STATION	NORTHING	EASTING
START (POT)	2000+00.00	2031940.9652	2622901.8900
PC	2002+19.17	2031940.2374	2622682.7214
PI	2002+43.73	2031940.1559	2622658.1577
PCC	2002+68.30	2031940.2852	2622633.5941
PI	2003+18.42	2031940.5493	2622583.4685
PRC	2003+68.22	2031950.6429	2622534.3690
PI	2004+69.14	2031970.9629	2622435.5242
PT	2005+67.03	2031948.9174	2622337.0500
PC	2007+21.30	2031915.2152	2622186.5069
PI	2008+58.34	2031885.2772	2622052.7780
PRC	2009+88.96	2031926.9160	2621922.2180
PI	2010+28.21	2031938.8424	2621884.8226
PRC	2010+67.28	2031944.4008	2621845.9669
PI	2011+92.52	2031962.1364	2621721.9869
PRC	2013+17.72	2031985.2305	2621598.8924
PI	2013+56.97	2031992.4683	2621560.3143
PRC	2013+96.04	2031993.2069	2621521.0701
PI	2015+35.29	2031995.8271	2621381.8483
PT	2016+67.81	2032069.3091	2621263.5691
PC	2018+09.65	2032144.1614	2621143.0843
PI	2019+13.27	2032198.8414	2621055.0694
PRC	2020+13.62	2032211.4434	2620952.2214
PI	2020+61.19	2032217.2291	2620905.0028
PT	2021+08.49	2032231.7142	2620859.6900
END (POT)	2024+27.72	2032328.9164	2620555.6178

MODEL: ex ddi coords [Sheet]
FILE NAME: c:\pwworkl\benesch projects\projects\d0173797\D264C24-Mt-Sht-ExCoord.dgn

benesch
Alfred Benesch & Company
35 W Wacker Drive, Suite 3300
Chicago, Illinois 60601
312-565-0450 Job No. 10800.00

USER NAME = lfranceschina	DESIGNED - A.GIBSON	REVISED -	
	DRAWN - T.BLANK	REVISED -	
PLOT SCALE = $SCALE$	CHECKED - J.TARDY	REVISED -	
PLOT DATE = 8/12/2024	DATE - 02/14/2025	REVISED -	

STATE OF ILLINOIS
DEPARTMENT OF TRANSPORTATION

EXISTING ALIGNMENT AND TIES

SCALE: SHEET 4 OF 9 SHEETS STA. TO STA.

F.A.I RTE.	SECTION	COUNTY	TOTAL SHEETS	SHEET NO.
*	(201-3)R & (4-1.5)R	WINNEBAGO	1685	91
		CONTRACT NO. 64C24		
	ILLINOIS	FED. AID PROJECT		

* FAI ROUTE 39 (I-39) & FAP 301 (US 20)

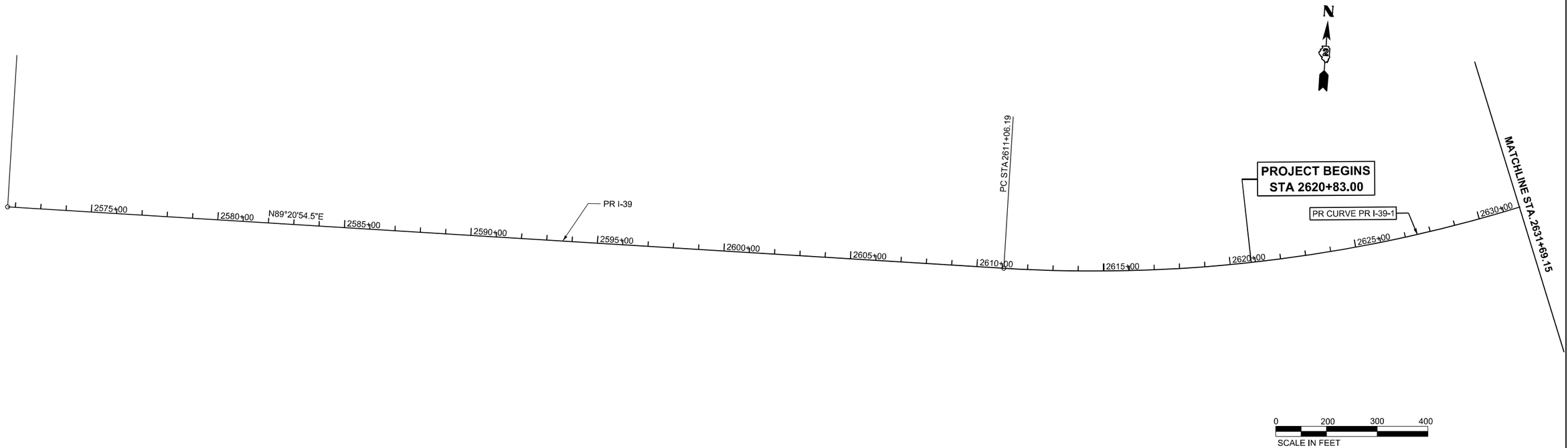

PR CURVE PR I-39-1
PI STA = 2638+19.71
Δ = 50°41'00" (LT)
D = 01°00'00"
R = 5,729.70'
T = 2,713.52'
L = 5068.44'
E = 610.07'
e = 3.4%
TR = 88'
SE RUN = 343'
PC STA = 2611+06.19
PT STA = 2661+74.63

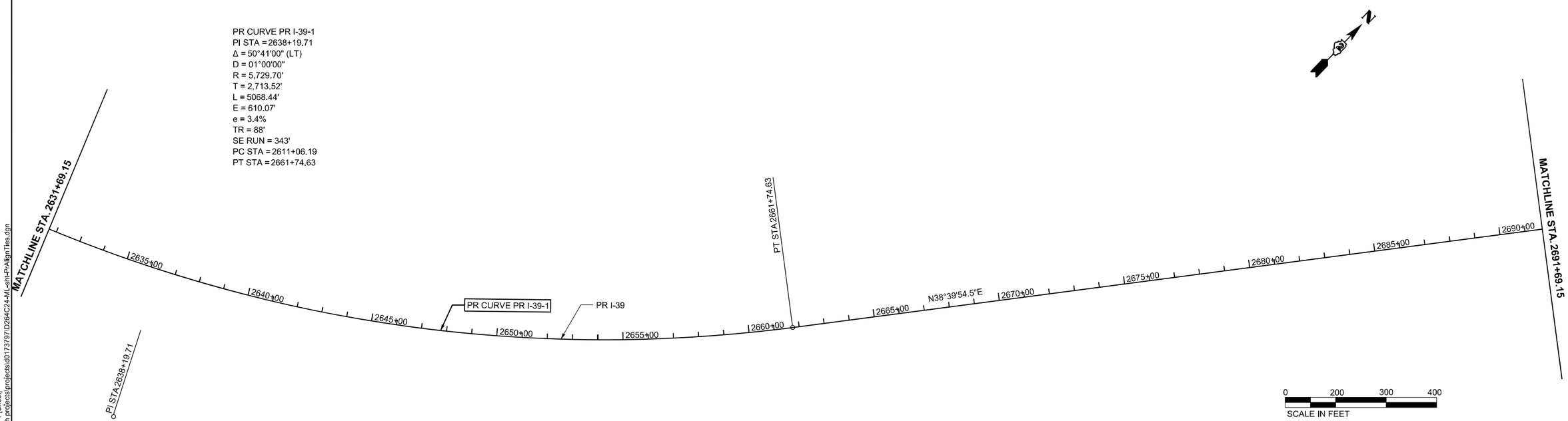

MODEL: I39 Align and Tie - Plan 1 [Sheet]
FILE NAME: c:\pwworkfi\benesch projects\projects\d0173797\D264C24-MLs-sht-PrAlignTies.dgn

benesch
Alfred Benesch & Company
35 W Wacker Drive, Suite 3200
Chicago, Illinois 60601
312-565-0450 Job No. 10800.00

USER NAME = lfranceschina	DESIGNED - A.GIBSON	REVISED -	
	DRAWN - T.BLANK	REVISED -	
PLOT SCALE = $SCALE$	CHECKED - J.TARDY	REVISED -	
PLOT DATE = 8/12/2024	DATE - 02/14/2025	REVISED -	

STATE OF ILLINOIS
DEPARTMENT OF TRANSPORTATION

PROPOSED ALIGNMENT AND TIES

SCALE: 1"=200' | SHEET 5 OF 9 SHEETS | STA. 2571+69.15 TO STA. 2691+69.15

F.A.I RTE.	SECTION	COUNTY	TOTAL SHEETS	SHEET NO.
*	(201-3)R & (4-1.5)R	WINNEBAGO	1685	92
		CONTRACT NO. 64C24		
	ILLINOIS	FED. AID PROJECT		

* FAI ROUTE 39 (I-39) & FAP 301 (US 20)

PR CURVE PR RAMP B-1
PI STA = 215+89.82
Δ = 17°09'16" (RT)
D = 06°51'42"
R = 835.00'
T = 125.94'
L = 250.00
E = 9.44'
e = 6.0%
TR = N/A
SE RUN = 162.0'
PC STA = 214+63.88
PCC STA = 217+13.88

PR CURVE PR RAMP B-2
PI STA = 218+11.86
Δ = 16°53'16" (RT)
D = 08°40'52"
R = 660.00'
T = 97.98'
L = 194.53
E = 7.23'
e = 6.0%
TR = 49.98'
SE RUN = 200.0'
PCC STA = 217+13.88
PT STA = 219+08.41

PR CURVE PR RAMP D-1
PI STA = 408+93.41
Δ = 28°08'18" (RT)
D = 06°51'42"
R = 835.00'
T = 209.26'
L = 410.07
E = 25.82'
e = 6.0%
TR = N/A
SE RUN = 192.0'
PC STA = 406+84.15
PT STA = 410+94.23

PR CURVE PR I-39-2
PI STA = 2724+62.27
Δ = 17°40'00" (LT)
D = 00°50'00"
R = 6,875.65'
T = 1,068.50'
L = 2120.05'
E = 82.53'
e = 3.0%
TR = 84.0'
SE RUN = 180.0'
PC STA = 2713+93.76
PT STA = 2735+13.81

PR CURVE PR I-39 NB-1
PI STA = 4+14.04
Δ = 06°52'43" (LT)
D = 00°49'54"
R = 6,889.15'
T = 414.04'
L = 827.09'
E = 12.43'
e = 3.0%
TR = 45.00'
SE RUN = 135.00'
PC STA = 0+00.00
PT STA = 8+27.09

PR CURVE PR I-39 SB-1
PI STA = 1304+04.28
Δ = 06°44'36" (LT)
D = 00°50'06"
R = 6,862.15'
T = 404.28'
L = 807.63'
E = 11.90'
e = 3.0%
TR = 84.00'
SE RUN = 180.00'
PC STA = 1300+00.00
PT STA = 1308+07.63

PR CURVE PR RAMP B-3
PI STA = 223+20.74
Δ = 44°00'59" (LT)
D = 16°51'06"
R = 340.00'
T = 137.43'
L = 261.20'
E = 26.72'
e = 6.0%
TR = 43.47'
SE RUN = 174.0'
PC STA = 221+83.31
PT STA = 224+44.51

PR CURVE PR I-39 NB
PI STA = 16+98.27
Δ = 07°01'38" (RT)
D = 01°21'23"
R = 4,224.50'
T = 259.39'
L = 518.12
E = 7.96'
e = 4.4%
TR (IN) = 38.00'
SE RUN (IN) = 301.00'
TR (OUT) = 79.00'
SE RUN (OUT) = 264.00'
PC STA = 14+38.88
PT STA = 19+57.00

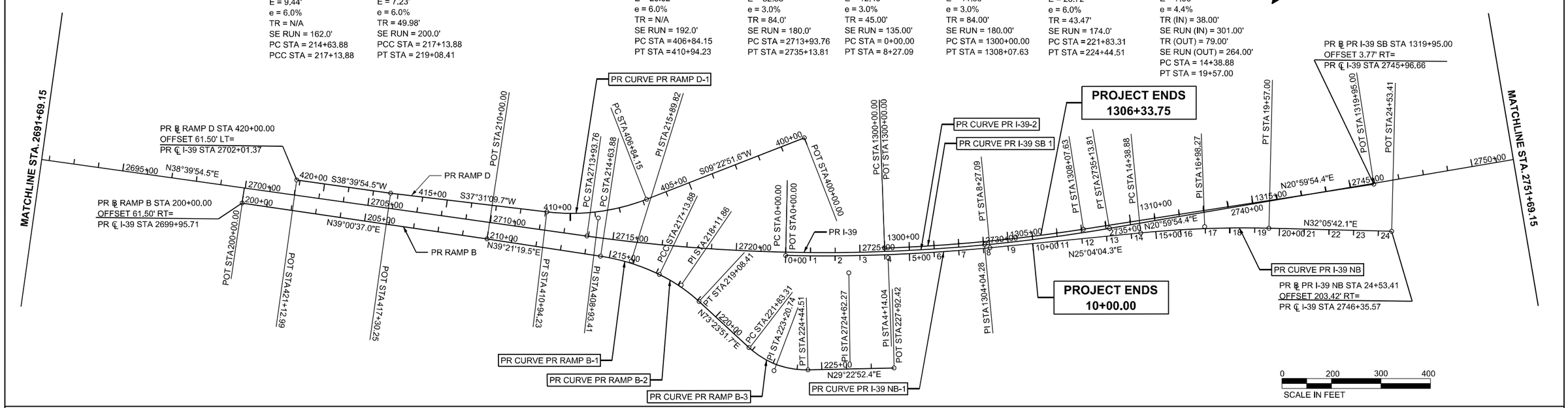

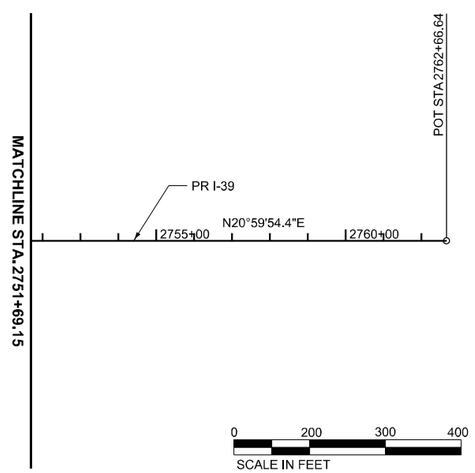

COORDINATE DATA - I-39 NB

Point Type	Station	Northing	Easting	Radius	Length	Tangent
PC	0+00.00	2031803.046	2621611.236			
HPI	4+14.04	2032154.377	2621830.317	6889.15	827.09	414.04
PT	8+27.09	2032529.419	2622005.743			
PT	8+27.09	2032529.419	2622005.743			
PC	14+38.88	2033083.584	2622264.954			
PC	14+38.88	2033083.584	2622264.954			
HPI	16+98.27	2033318.537	2622374.854	4224.5	518.12	259.39
PT	19+57.00	2033538.281	2622512.673			
PT	19+57.00	2033538.281	2622512.673			
END	24+53.41	2033958.822	2622776.427			

COORDINATE DATA - I-39

Point Type	Station	Northing	Easting	Radius	Length	Tangent
START	2571+69.15	2024883.09	2609527.903			
PC	2611+06.19	2024927.859	2613464.689			
PC	2611+06.19	2024927.859	2613464.689			
HPI	2638+19.71	2024958.716	2616178.029	5729.7	5068.441	2713.516
PT	2661+74.63	2027077.459	2617873.346			
PT	2661+74.63	2027077.459	2617873.346			
PC	2713+93.76	2031152.611	2621134.089			
PC	2713+93.76	2031152.611	2621134.089			
HPI	2724+62.27	2031986.911	2621801.656	6875.65	2120.051	1068.505
PT	2735+13.81	2032984.457	2622184.546			
PT	2735+13.81	2032984.457	2622184.546			
END	2762+66.64	2035554.474	2623171.003			

COORDINATE DATA - RAMP B

Point Type	Station	Northing	Easting	Radius	Length	Tangent
START	200+00.00	2030022.575	2620308.652			
HPI	210+00.00	2030799.608	2620938.112			
HPI	210+00.00	2030799.608	2620938.112			
PC	214+63.88	2031158.291	2621232.27			
PC	214+63.88	2031158.291	2621232.27			
HPI	215+89.82	2031255.673	2621312.134	835	250	125.942
PCC	217+13.88	2031325.167	2621417.167			
PCC	217+13.88	2031325.167	2621417.167			
HPI	218+11.86	2031379.23	2621498.878	660	194.534	97.977
PT	219+08.41	2031407.225	2621592.771			
PT	219+08.41	2031407.225	2621592.771			
PC	221+83.31	2031485.771	2621856.209			
PC	22183.31	2031485.771	2621856.209			
HPI	22320.736	2031525.037	2621987.906	340	261.199	137.426
PT	22444.509	2031644.787	2622055.329			
PT	22444.509	2031644.787	2622055.329			
END	22792.422	2031947.949	2622226.022			

COORDINATE DATA - I-39 SB

Point Type	Station	Northing	Easting	Radius	Length	Tangent
PC	1300+00.00	2032162.034	2621789.592			
HPI	1304+04.28	2032516.942	2621983.201	6862.15	807.63	404.28
PT	1308+07.63	2032892.129	2622133.797			
PT	1308+07.63	2032892.129	2622133.797			
END	1319+95.00	2033994.04	2622576.093			

COORDINATE DATA - RAMP D

Point Type	Station	Northing	Easting	Radius	Length	Tangent
START	400+00.00	2032110.743	2621240.647			
PC	406+84.15	2031435.74	2621129.132			
PC	406+84.15	2031435.74	2621129.132			
HPI	408+93.41	2031229.279	2621095.022	835	410.075	209.26
PT	410+94.23	2031063.305	2620967.577			
PT	410+94.23	2031063.305	2620967.577			
HPI	417+30.25	2030558.841	2620580.218			
HPI	417+30.25	2030558.841	2620580.218			
END	421+12.99	2030260	2620341.099			

MODEL: I39 Align and Tie - Plan 3 [Sheet]
FILE NAME: c:\pwworkfi\benesch projects\projects\d0173797\D264C24-ML-sht-PrAlignTies.dgn

benesch
Alfred Benesch & Company
35 W Wacker Drive, Suite 3300
Chicago, Illinois 60601
312-565-0450 Job No. 10800.00

USER NAME = agibson	DESIGNED - A.GIBSON	REVISED -	
	DRAWN - T.BLANK	REVISED -	
PLOT SCALE = $SCALE$	CHECKED - J.TARDY	REVISED -	
PLOT DATE = 2/6/2025	DATE - 02/14/2025	REVISED -	

STATE OF ILLINOIS
DEPARTMENT OF TRANSPORTATION

PROPOSED ALIGNMENT AND TIES

SCALE: 1"=200' | SHEET 6 OF 9 SHEETS | STA. 2691+69.15 TO STA. 2811+69.15

F.A.I RTE.	SECTION	COUNTY	TOTAL SHEETS	SHEET NO.
*	(201-3)R & (4-1.5)R	WINNEBAGO	1685	93
		CONTRACT NO. 64C24		
	ILLINOIS	FED. AID PROJECT		

* FAI ROUTE 39 (I-39) & FAP 301 (US 20)

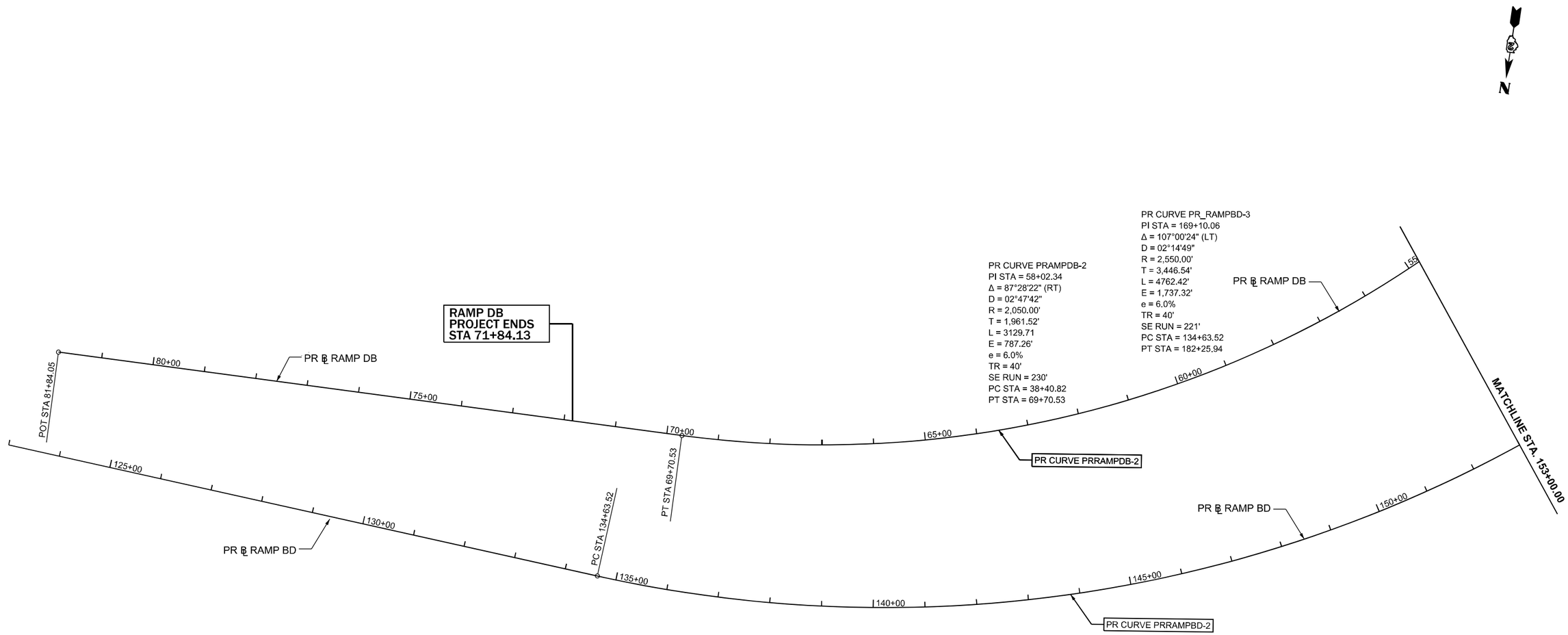

MODEL: PrRamps-Plan 1 [Sheet]
FILE NAME: c:\pwworkdir\benesch projects\projects\d0173797\D264C24_ML-Sht-PrRamps.dgn

benesch
Alfred Benesch & Company
35 W Wacker Drive, Suite 3200
Chicago, Illinois 60601
312-565-4450 Job No. 10806.00

USER NAME = agibson	DESIGNED - J.MAJCHER	REVISED -	
	DRAWN - T.BLANK	REVISED -	
PLOT SCALE = $SCALE$	CHECKED - J.TARDY	REVISED -	
PLOT DATE = 2/6/2025	DATE - 02/14/2025	REVISED -	

STATE OF ILLINOIS
DEPARTMENT OF TRANSPORTATION

PROPOSED ALIGNMENT AND TIES

SCALE: 1"=100' | SHEET 7 OF 9 SHEETS | STA. 123+00.00 TO STA. 153+00.00

F.A.I RTE.	SECTION	COUNTY	TOTAL SHEETS	SHEET NO.
*	(201-3)R & (4-1.5)R	WINNEBAGO	1685	94
		CONTRACT NO. 64C24		
	ILLINOIS	FED. AID PROJECT		

* FAI ROUTE 39 (I-39) & FAP 301 (US 20)

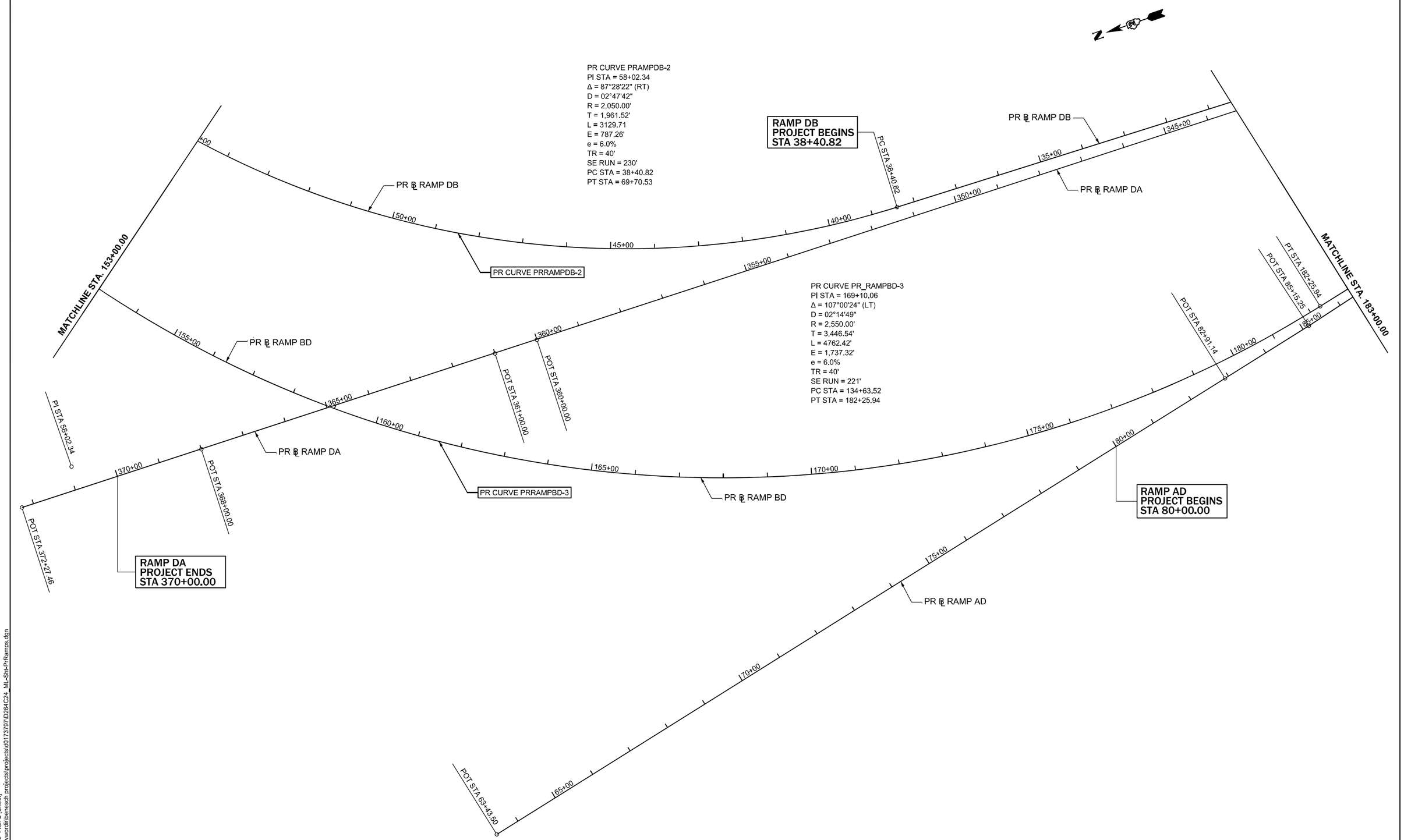

MODEL: PrRamps-Plan 2 [Sheet]
FILE NAME: c:\pwworkdir\benesch projects\projects\d0173797\D264C24_ML-Sht-PrRamps.dgn

benesch
Alfred Benesch & Company
35 W Wacker Drive, Suite 3200
Chicago, Illinois 60601
312-565-6450 Job No. 10800.00

USER NAME = lfranceschina	DESIGNED - J.MAJCHER	REVISED -	
	DRAWN - T.BLANK	REVISED -	
PLOT SCALE = $SCALE$	CHECKED - J.TARDY	REVISED -	
PLOT DATE = 8/12/2024	DATE - 02/14/2025	REVISED -	

STATE OF ILLINOIS
DEPARTMENT OF TRANSPORTATION

PROPOSED ALIGNMENT AND TIES

SCALE: 1"=100' | SHEET 8 OF 9 SHEETS | STA. 153+00.00 TO STA. 183+00.00

F.A.I RTE.	SECTION	COUNTY	TOTAL SHEETS	SHEET NO.
*	(201-3)R & (4-1.5)R	WINNEBAGO	1685	95
		CONTRACT NO. 64C24		
	ILLINOIS	FED. AID PROJECT		

* FAI ROUTE 39 (I-39) & FAP 301 (US 20)

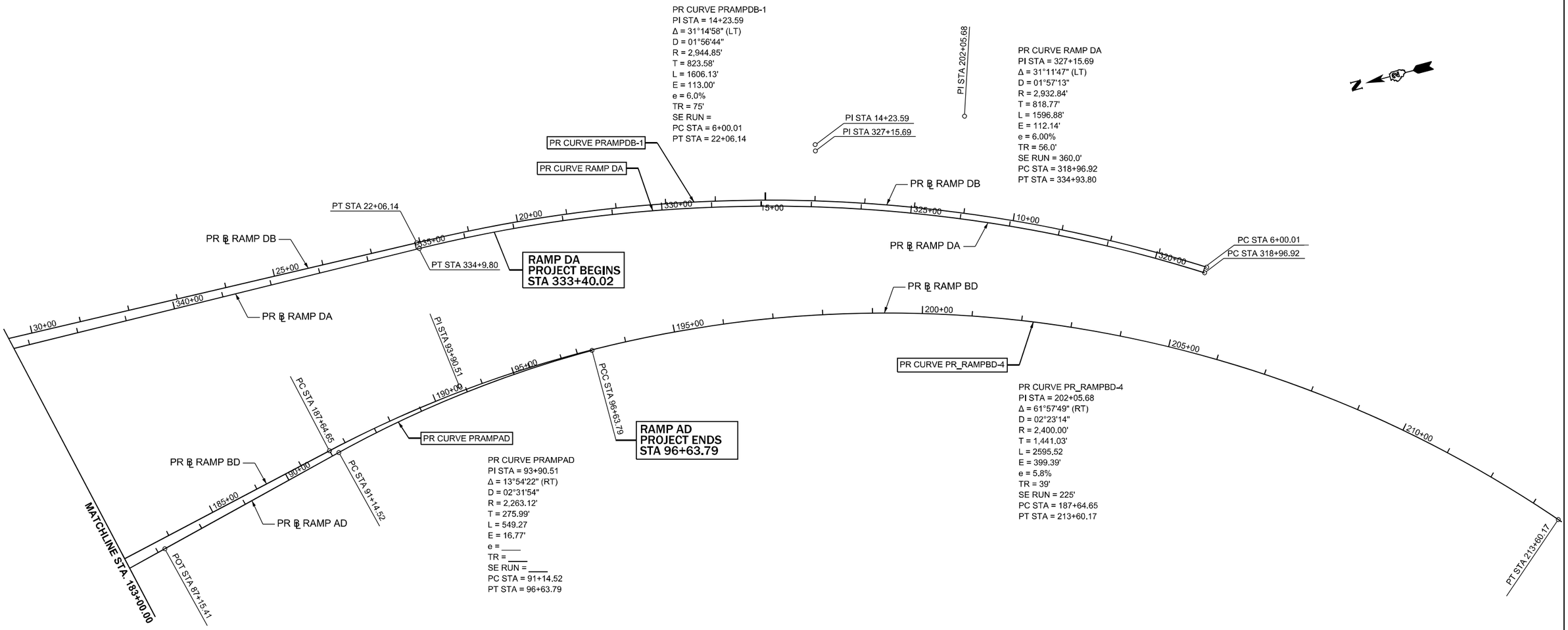

PR CURVE PRAMPAD
PI STA = 93+90.51
Δ = 13°54'22" (RT)
D = 02°31'54"
R = 2,263.12'
T = 275.99'
L = 549.27
E = 16.77'
e = ____
TR = ____
SE RUN = ____
PC STA = 91+14.52
PT STA = 96+63.79

PR CURVE PR_RAMPBD-4
PI STA = 202+05.68
Δ = 61°57'49" (RT)
D = 02°23'14"
R = 2,400.00'
T = 1,441.03'
L = 2595.52
E = 399.39'
e = 5.8%
TR = 39'
SE RUN = 225'
PC STA = 187+64.65
PT STA = 213+60.17

MODEL: PrRamps-Plan 3 [Sheet]
FILE NAME: c:\pwworld\benesch projects\projects\d0173797\D264C24_ML-Sht-PrRamps.dgn

benesch
Alfred Benesch & Company
35 W Wacker Drive, Suite 3200
Chicago, Illinois 60601
312-565-6450 Job No. 10800.00

USER NAME = agibson	DESIGNED -	J.MAJCHER	REVISED -	STATE OF ILLINOIS DEPARTMENT OF TRANSPORTATION	PROPOSED ALIGNMENT AND TIES
	DRAWN -	T.BLANK	REVISED -		
PLOT SCALE = $SCALE$	CHECKED -	J.TARDY	REVISED -		
PLOT DATE = 2/6/2025	DATE -	02/14/2025	REVISED -		

SCALE: 1"=100' | SHEET 9 OF 9 SHEETS | STA. 183+00.00 TO STA. 215+00.00

F.A.I RTE.	SECTION	COUNTY	TOTAL SHEETS	SHEET NO.
*	(201-3)R & (4-1.5)R	WINNEBAGO	1685	96
		CONTRACT NO. 64C24		
	ILLINOIS	FED. AID PROJECT		

* FAI ROUTE 39 (I-39) & FAP 301 (US 20)

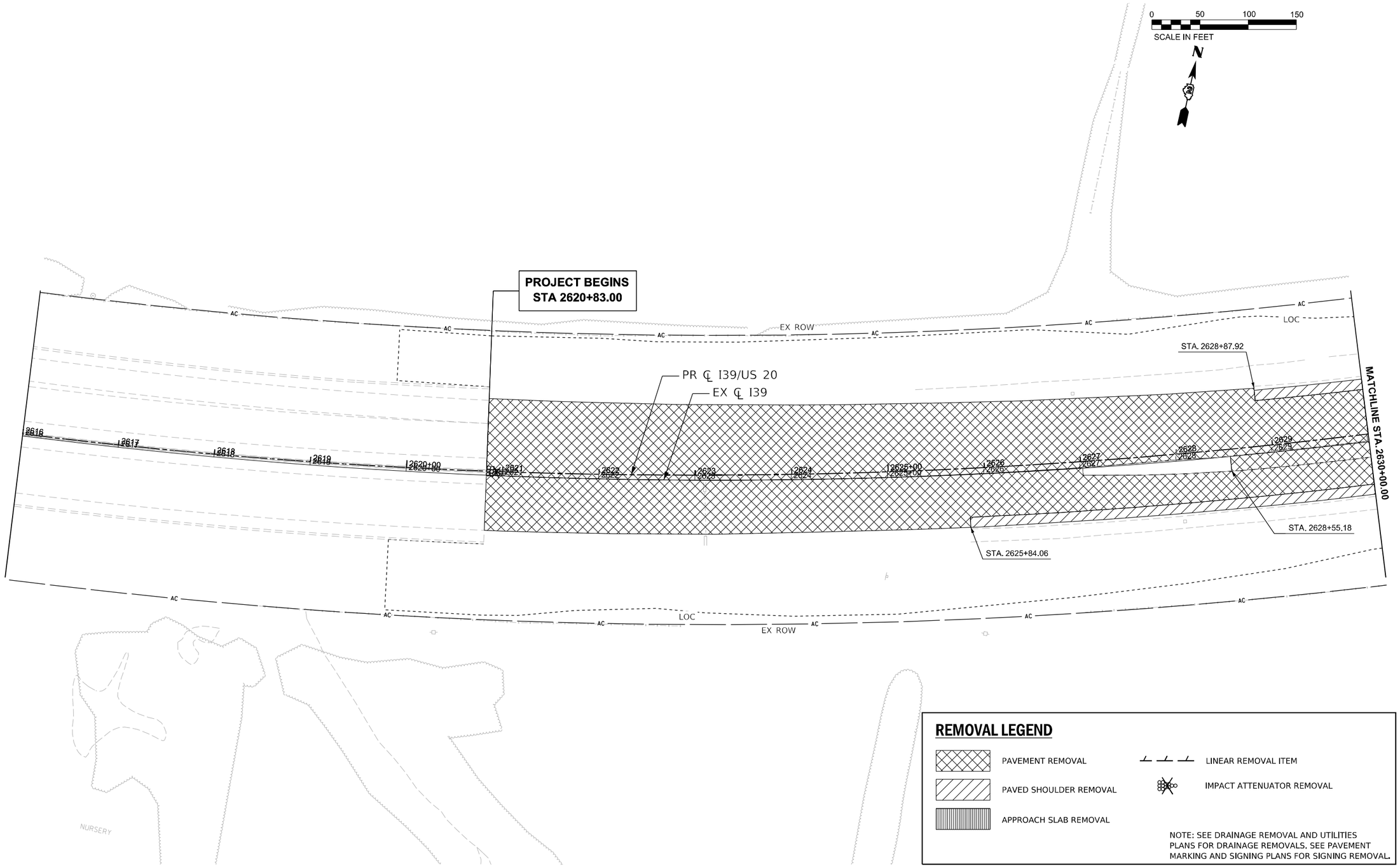

REMOVAL LEGEND

- PAVEMENT REMOVAL
- PAVED SHOULDER REMOVAL
- APPROACH SLAB REMOVAL
- LINEAR REMOVAL ITEM
- IMPACT ATTENUATOR REMOVAL

NOTE: SEE DRAINAGE REMOVAL AND UTILITIES PLANS FOR DRAINAGE REMOVALS. SEE PAVEMENT MARKING AND SIGNING PLANS FOR SIGNING REMOVAL.

MODEL: I39 Wide - REM Plan 5 [Sheet]
FILE NAME: c:\pwworkdir\benesch projects\projects\d0173783\D264C24_ML-sht-REM-I39.dgn

benesch
Alfred Benesch & Company
35 W Wacker Drive, Suite 3200
Chicago, Illinois 60601
312-565-4450 Job No. 10800.00

USER NAME = agibson	DESIGNED - A.GIBSON	REVISED -	
	DRAWN - E.SAYRE	REVISED -	
PLOT SCALE = $SCALE$	CHECKED - J.TARDY	REVISED -	
PLOT DATE = 2/6/2025	DATE - 02/14/2025	REVISED -	

STATE OF ILLINOIS
DEPARTMENT OF TRANSPORTATION

REMOVAL PLAN
I-39

SCALE: 1"=50' | SHEET 1 OF 10 SHEETS | STA. 2616+00.00 TO STA. 2630+00.00

F.A.I RTE.	SECTION	COUNTY	TOTAL SHEETS	SHEET NO.
*	(201-3)R & (4-1.5)R	WINNEBAGO	1685	97
		CONTRACT NO. 64C24		
		ILLINOIS	FED. AID PROJECT	

* FAI ROUTE 39 (I-39) & FAP 301 (US 20)

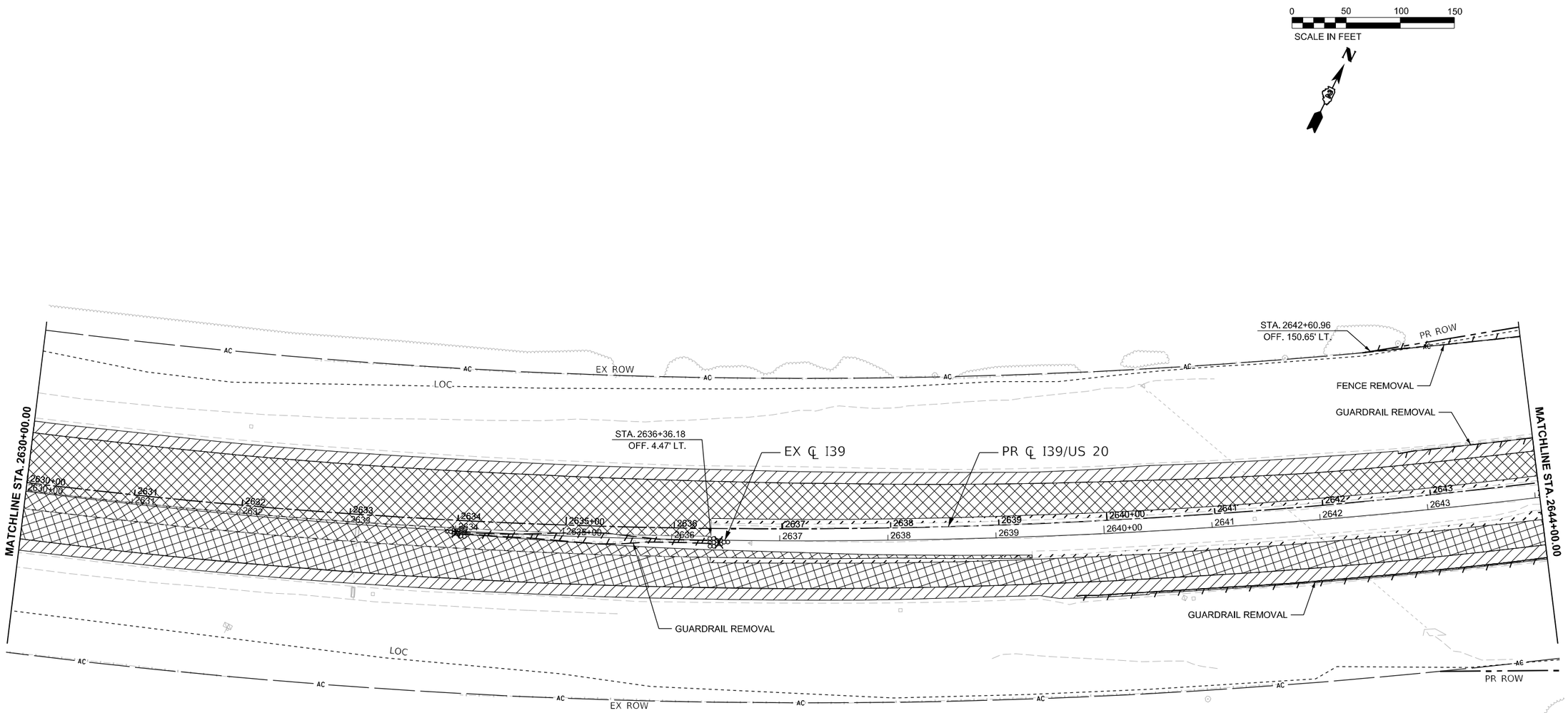

REMOVAL LEGEND

- PAVEMENT REMOVAL
- PAVED SHOULDER REMOVAL
- APPROACH SLAB REMOVAL
- LINEAR REMOVAL ITEM
- IMPACT ATTENUATOR REMOVAL

NOTE: SEE DRAINAGE REMOVAL AND UTILITIES PLANS FOR DRAINAGE REMOVALS. SEE PAVEMENT MARKING AND SIGNING PLANS FOR SIGNING REMOVAL.

MODEL: I39 Wide - REM Plan 6 [Sheet]
FILE NAME: c:\pwworkdir\benesch projects\projects\d0173783\D284C24_ML-sht-REM-I39.dgn

benesch
Alfred Benesch & Company
35 W Wacker Drive, Suite 3300
Chicago, Illinois 60601
312-565-6450 Job No. 10800.00

USER NAME = agibson	DESIGNED - A.GIBSON	REVISED -	
	DRAWN - E.SAYRE	REVISED -	
PLOT SCALE = $SCALE$	CHECKED - J.TARDY	REVISED -	
PLOT DATE = 2/6/2025	DATE - 02/14/2025	REVISED -	

STATE OF ILLINOIS
DEPARTMENT OF TRANSPORTATION

REMOVAL PLAN
I-39

SCALE: 1"=50' | SHEET 2 OF 10 SHEETS | STA. 2630+00.00 TO STA. 2644+00.00

F.A.I RTE.	SECTION	COUNTY	TOTAL SHEETS	SHEET NO.
*	(201-3)R & (4-1.5)R	WINNEBAGO	1685	98
		CONTRACT NO. 64C24		
		ILLINOIS	FED. AID PROJECT	

* FAI ROUTE 39 (I-39) & FAP 301 (US 20)

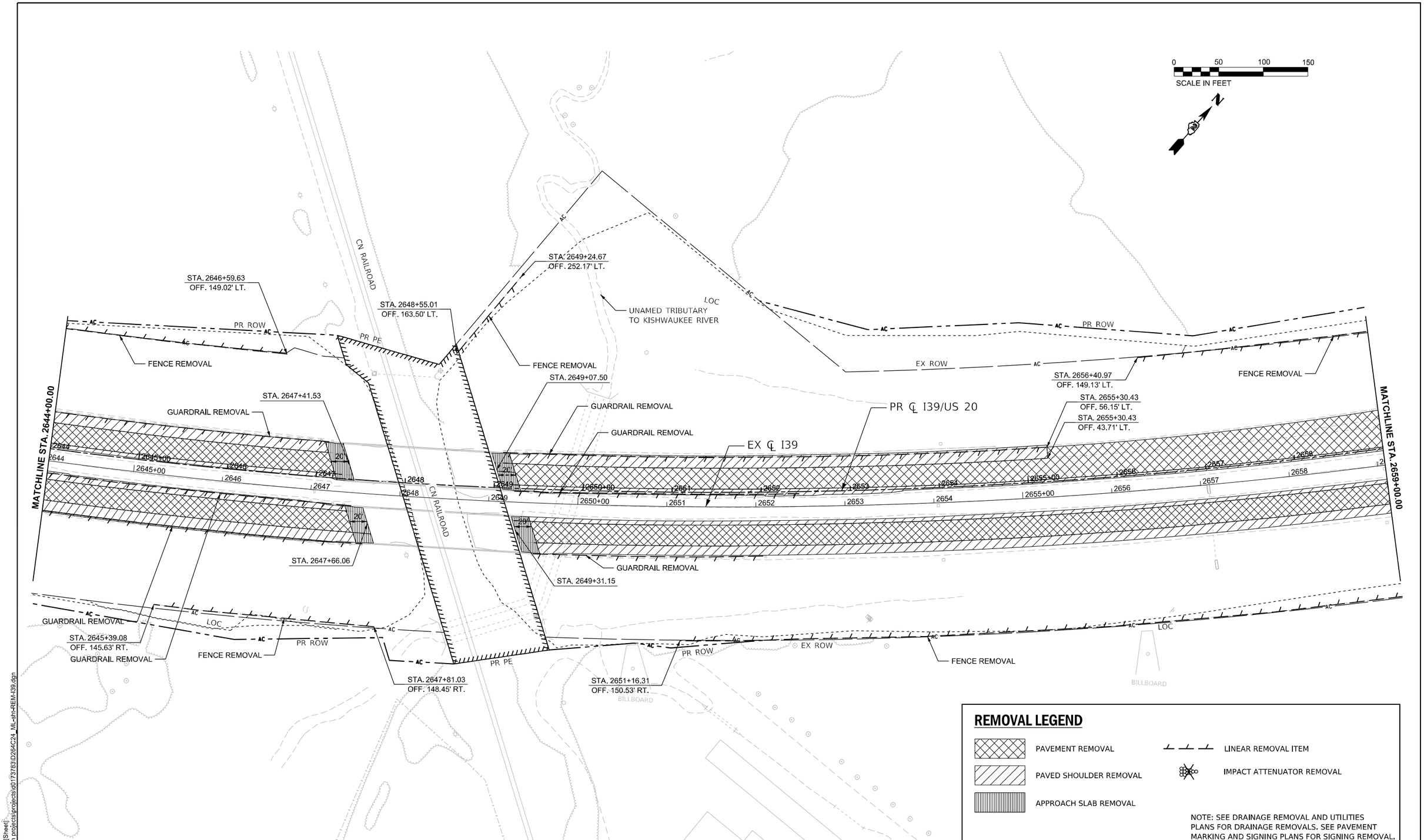

MODEL: I39 Wide - REM Plan 7 [Sheet]
FILE NAME: c:\pwworkin\benesch projects\projects\0173783\D264C24_ML-sh-REM-I39.dgn

USER NAME = agibson	DESIGNED - A.GIBSON	REVISED -	
	DRAWN - E.SAYRE	REVISED -	
PLOT SCALE = $SCALE$	CHECKED - J.TARDY	REVISED -	
PLOT DATE = 2/6/2025	DATE - 02/27/24	REVISED -	

STATE OF ILLINOIS
DEPARTMENT OF TRANSPORTATION

REMOVAL PLAN
I-39

SCALE: 1"=50' | SHEET 3 OF 10 SHEETS | STA. 2644+00.00 TO STA. 2659+00.00

F.A.I RTE.	SECTION	COUNTY	TOTAL SHEETS	SHEET NO.
*	(201-3)R & (4-1.5)R	WINNEBAGO	1685	99
		CONTRACT NO. 64C24		
	ILLINOIS	FED. AID PROJECT		

* FAI ROUTE 39 (I-39) & FAP 301 (US 20)

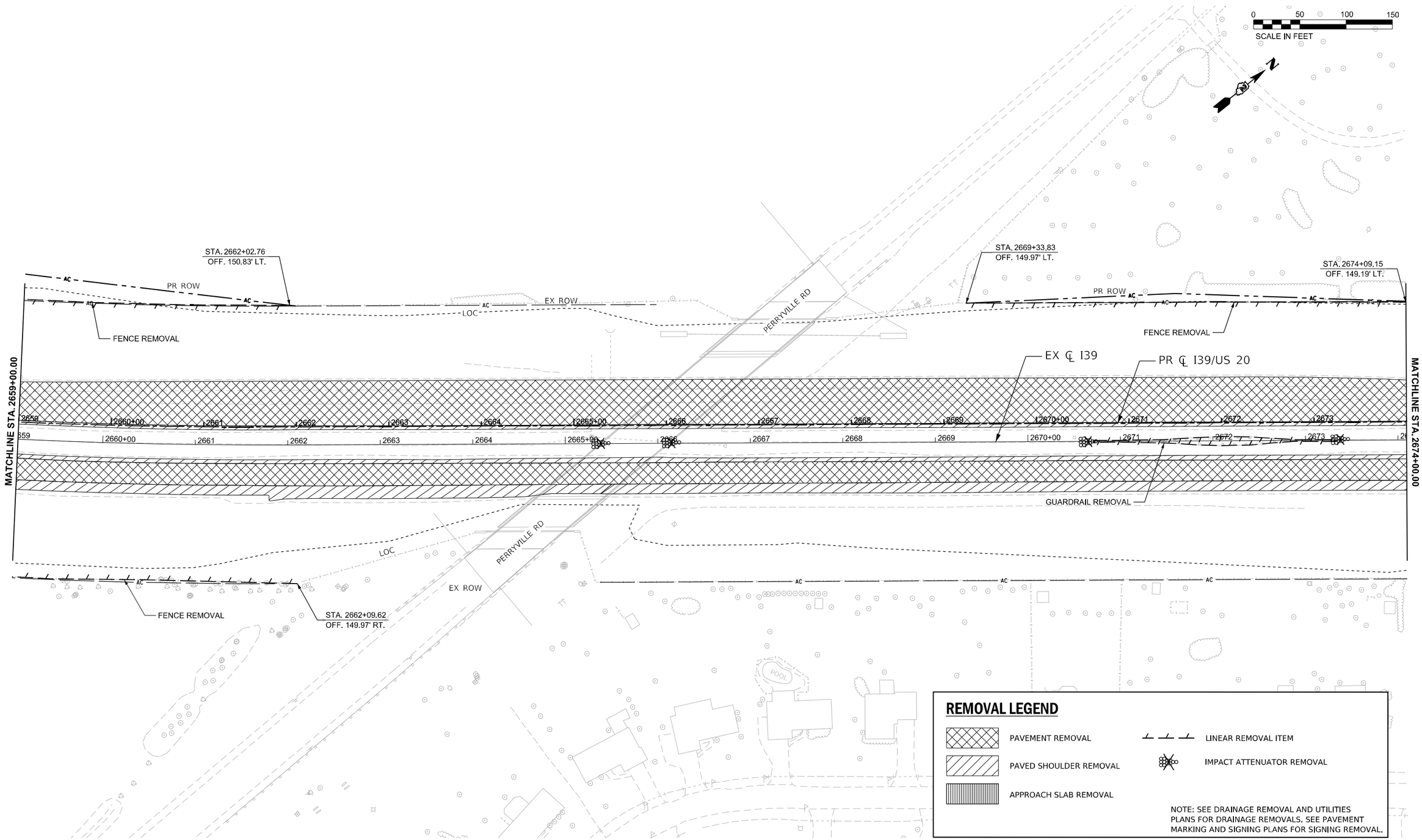

MODEL: I39 Wide - REM Plan 8 [Sheet]
FILE NAME: c:\pwworkdir\benesch projects\projects\d0173783\D264C24_ML-sht-REM-I39.dgn

USER NAME = agibson	DESIGNED - A.GIBSON	REVISED -	
	DRAWN - E.SAYRE	REVISED -	
PLOT SCALE = $SCALE$	CHECKED - J.TARDY	REVISED -	
PLOT DATE = 2/6/2025	DATE - 02/27/24	REVISED -	

STATE OF ILLINOIS
DEPARTMENT OF TRANSPORTATION

REMOVAL PLAN
I-39

SCALE: 1"=50' | SHEET 4 OF 10 SHEETS | STA. 2659+00.00 TO STA. 2674+00.00

F.A.I RTE.	SECTION	COUNTY	TOTAL SHEETS	SHEET NO.
*	(201-3)R & (4-1,5)R	WINNEBAGO	1685	100
		CONTRACT NO. 64C24		
		ILLINOIS	FED. AID PROJECT	

* FAI ROUTE 39 (I-39) & FAP 301 (US 20)