F.A.U. RTE.	SECTION	COUNTY	TOTAL SHEETS	SHEET NO.
4006	22-00094-00-FP	KANE	105	1
	ILLINOIS	CONTRACT NO. 61L58		

08-01-2025 LETTING ITEM 007

FEDERAL AID PROGRAM ENGINEER: CARMEN E. RAMOS, PE, SCHAUMBURG, IL

STATE OF ILLINOIS
DEPARTMENT OF TRANSPORTATION

PROPOSED
HIGHWAY PLANS

FAU 4006 / MUN 0415 (LW BESINGER DRIVE)
FROM LAKE MARIAN ROAD TO ILLINOIS ROUTE 25
RESURFACING AND RECONSTRUCTION
SECTION NO.: 22-00094-00-FP
PROJECT NO.: 3M81(649)
VILLAGE OF CARPENTERSVILLE
KANE COUNTY
JOB: C-91-363-22

FOR INDEX OF SHEETS, SEE SHEET NO. 2
FOR HIGHWAY STANDARDS, SEE SHEET NO. 2

TRAFFIC DATA

ADT:	2023 TRAFFIC
BESINGER DRIVE	4000 VPD

ROADWAY	SPEED LIMIT	DESIGN SPEED
BESINGER DRIVE	25 MPH	25 MPH

DESIGN DESIGNATION
BESINGER DRIVE - MAJOR COLLECTOR

PROJECT LOCATION MAP
KANE COUNTY, ILLINOIS
N.T.S.

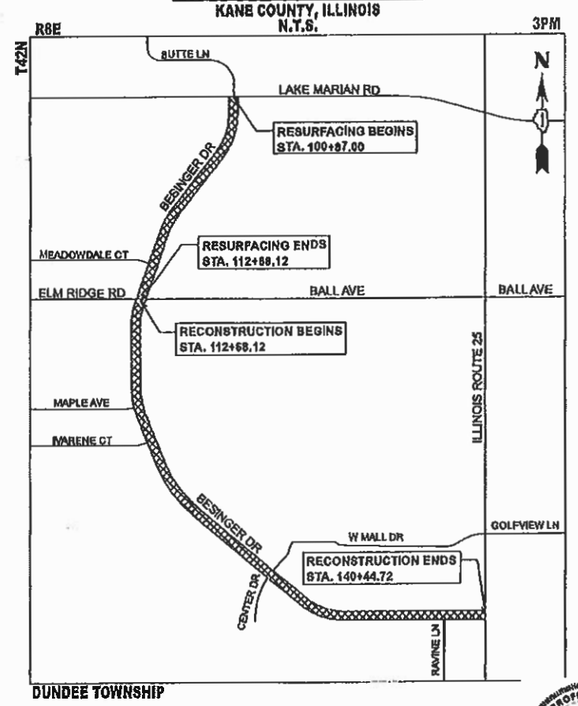

GROSS LENGTH = 3958 FT. = 0.75 MILE
NET LENGTH = 3958 FT. = 0.75 MILE

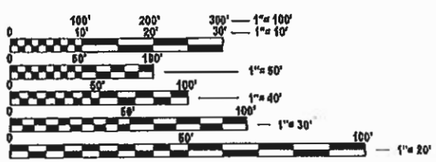

FULL SIZE PLANS HAVE BEEN PREPARED USING STANDARD ENGINEERING SCALES. REDUCED SIZED PLANS WILL NOT CONFORM TO STANDARD SCALES. IN MAKING MEASUREMENTS ON REDUCED PLANS, THE ABOVE SCALES MAY BE USED.

J.U.L.I.E.
JOINT UTILITY LOCATION INFORMATION FOR EXCAVATION
1-800-892-0123
OR 811

PROJECT ENGINEER: J. HORWITZ
PROJECT MANAGER: J. MELHUISH

CONTRACT NO. 61L58

LOCATION OF SECTION INDICATED THUS:

KOSHY J. VAIDYAN
062-037286
REGISTERED PROFESSIONAL ENGINEER OF ILLINOIS
SEAL

PROFESSIONAL ENGINEER'S SIGN & SEAL
EXCLUDING SHEET(S):
KOSHY J. VAIDYAN, P.E.
EXPIRES: 11-30-25

JACK R. MELHUISH, JR.
062-056288
REGISTERED PROFESSIONAL ENGINEER OF ILLINOIS
SEAL

PROFESSIONAL ENGINEER'S SIGN & SEAL
EXCLUDING SHEET(S):
JACK R. MELHUISH, P.E.
EXPIRES: 11-30-25

LICENSED PROFESSIONAL ENGINEER
JACK R. MELHUISH
062-056288
STATE OF ILLINOIS

HRGreen
1391 CORPORATE DRIVE, SUITE 203 | McHENRY, ILLINOIS 60050
Phone: 815.385.1778 | Toll Free: 800.720.7805 | Fax: 815.385.1781 | HRGreen.com
ILLINOIS PROFESSIONAL DESIGN FIRM #184-001322

STATE OF ILLINOIS
DEPARTMENT OF TRANSPORTATION

APPROVED MAY 22 20 25
VILLAGE OF CARPENTERSVILLE

PASSED May 22 20 25
DISTRICT ONE ENGINEER OF LOCAL ROADS AND STREETS

RELEASED FOR BID BASED ON LIMITED REVIEW May 29th 20 25
REGIONAL ENGINEER

PRINTED BY THE AUTHORITY OF THE STATE OF ILLINOIS

INDEX OF SHEETS

1		COVER SHEET
2		INDEX OF SHEETS, STATE STANDARDS & DISTRICT 1 DETAILS
3	- 4	GENERAL NOTES
5	- 17	SUMMARY OF QUANTITIES
18	- 19	TYPICAL SECTIONS
20	- 21	SCHEDULE OF QUANTITIES
22	- 23	ALIGNMENT, TIES AND BENCHMARKS
24	- 25	ROADWAY REMOVAL PLANS
26	- 28	ROADWAY PLAN AND PROFILE
29	- 35	SUGGESTED MAINTENANCE OF TRAFFIC PLANS
36		DETOUR PLAN
37	- 38	EROSION CONTROL AND LANDSCAPE PLANS
39	- 41	DRAINAGE PLAN AND PROFILES
42	- 43	DRAINAGE SCHEDULE
44	- 47	SANITARY AND WATER MAIN PLANS
48	- 49	INTERSECTION GRADING PLANS
50		SUPERELEVATION TABLE
51	- 52	PAVEMENT MARKING AND SIGNING PLANS
53	- 62	TRAFFIC SIGNAL PLANS
63	- 71	LIGHTING PLANS
72	- 74	SIDEWALK RAMP DETAILS
75	- 89	IDOT DISTRICT 1 DETAILS
90	- 105	BESINGER DRIVE CROSS SECTIONS

DISTRICT ONE DETAILS

STANDARD NO.	LIST OF DESCRIPTION
BD01	DRIVEWAY DETAILS-DISTANCE BETWEEN R.O.W. AND FACE OF CURB & EDGE OF SHOULDER ≥ TO 15 FT
BD02	DRIVEWAY DETAILS-DISTANCE BETWEEN R.O.W. AND FACE OF CURB & EDGE OF SHOULDER < TO 15 FT
BD07	DETAIL OF STORM SEWER CONNECTION TO EXISTING STORM SEWER
BD08	FRAMES AND LIDS ADJUSTMENT WITH MILLING
BD32	BUTT JOINTS AND HMA TAPER
BD36	FIRE HYDRANT TO BE MOVED
BD51	BENCHING DETAIL FOR EMBANKMENT WIDENING
BE300	LIGHTPOLE FOUNDATION 30' TO 35' M.H. 11 1/2" BOLT CIRCLE
BE310	LIGHT POLE FOUNDATION, OFFSET 40' (12.192 m) TO 47' (14.478 m) M.H. 15" (381 mm) BOLT CIRCLE
BE403	ALUMINUM LIGHT POLE 30' MOUNTING HEIGHT
BE701	LUMINAIRE SAFETY CABLE ASSEMBLY
BE702	MISC. ELECTRICAL DETAILS
TC10	TRAFFIC CONTROL AND PROTECTION FOR SIDE ROADS, INTERSECTIONS, AND DRIVEWAYS
TC11	TYPICAL APPLICATIONS RAISED REFLECTIVE PAVEMENT MARKERS (SNOW PLOW RESISTANT)
TC13	DISTRICT ONE TYPICAL PAVEMENT MARKINGS
TC14	TRAFFIC CONTROL AND PROTECTION AT TURN BAYS (TO REMAIN OPEN TO TRAFFIC)
TC16	PAVEMENT MARKING LETTERS AND SYMBOLS FOR TRAFFIC STAGING
TC21	DETOUR SIGNING FOR CLOSING STATE HIGHWAYS
TC22	ARTERIAL ROAD INFORMATION SIGN
TC26	DRIVEWAY ENTRANCE SIGNING
TS05	STANDARD TRAFFIC SIGNAL DESIGN DETAILS (7 SHEETS)

STATE STANDARDS

STANDARD NO.	LIST OF DESCRIPTION
000001-08	STANDARD SYMBOLS, ABBREVIATIONS AND PATTERNS
280001-07	TEMPORARY EROSION CONTROL SYSTEMS
424001-12	PERPENDICULAR CURB RAMPS FOR SIDEWALKS
424021-07	DEPRESSED CURB FOR SIDEWALKS
442201-03	CLASS C AND D PATCHES
542306-03	PRECAST REINFORCED CONCRETE ELLIPTICAL FLARED END SECTION
542311-07	TRAVERSABLE PIPE GRATE FOR CONCRETE END SECTION
601001-05	PIPE UNDERDRAINS
602001-02	CATCH BASIN, TYPE A
602011-02	CATCH BASIN, TYPE C
602301-04	INLET, TYPE A
602402-03	PRECAST MANHOLE, TYPE A 5' DIAMETER
602406-11	PRECAST MANHOLE, TYPE A 6' DIAMETER
602411-09	PRECAST MANHOLE, TYPE A 7' DIAMETER
602601-06	PRECAST REINFORCED CONCRETE FLAT SLAB TOP
602701-02	MANHOLE STEPS
604001-05	FRAME AND LIDS, TYPE 1
604051-04	FRAME AND GRATE TYPE 11
604091-05	FRAME AND GRATE TYPE 24
606001-08	CONCRETE CURB TYPE B AND COMBINATION CONCRETE CURB AND GUTTER
631011-10	TRAFFIC BARRIER TERMINAL, TYPE 2
701006-05	OFF-RD OPERATIONS, 2L, 2W, 15' (4.5M) TO 24" (600 MM) FROM PAVEMENT EDGE
701011-04	OFF-RD MOVING OPERATIONS, 2L, 2W, DAY ONLY
701101-05	OFF-RD OPERATIONS, MULTILANE, 15' TO 24" FROM PAVEMENT EDGE
701106-02	OFF-RD OPERATIONS, MULTILANE, MORE THAN 15' AWAY
701301-04	LANE CLOSURE, 2L, 2W, SHORT TIME OPERATIONS
701311-03	LANE CLOSURE, 2L, 2W, MOVING OPERATIONS - DAY ONLY
701427-05	LANE CLOSURE, MULTILANE, INTERMITTENT OR MOVING OPER., FOR SPEEDS <= 40 MPH
701501-06	URBAN LANE CLOSURE, 2L, 2W, UNDIVIDED
701701-10	URBAN LANE CLOSURE, MULTILANE INTERSECTION
701801-06	SIDEWALK, CORNER OR CROSSWALK CLOSURE
701901-10	TRAFFIC CONTROL DEVICES
720001-01	SIGN PANEL MOUNTING DETAILS
720006-04	SIGN PANEL ERECTION DETAILS
720011-01	METAL POSTS FOR SIGNS, MARKERS, AND DELINEATORS
728001-01	TELESCOPING STEEL SIGN SUPPORT
729001-01	APPLICATION OF TYPE A AND B METAL POSTS (FOR SIGNS AND MARKERS)
731001-01	BASE FOR TELESCOPING STEEL SIGN SUPPORT
780001-05	TYPICAL PAVEMENT MARKINGS
781001-04	TYPICAL APPLICATIONS RAISED REFLECTIVE PAVEMENT MARKINGS
782006-01	GUARDRAIL AND BARRIER WALL REFLECTOR MOUNTING DETAILS
805001-01	ELECTRICAL SERVICE INSTALLATION DETAILS
814001-03	HANDHOLES
814006-03	DOUBLE HANDHOLES
836001-05	LIGHT POLE FOUNDATION
877001-08	STEEL MAST ARM ASSEMBLY AND POLE 16' THROUGH 55'
878001-11	CONCRETE FOUNDATION DETAILS
880006-01	TRAFFIC SIGNAL MOUNTING DETAILS
886001-01	DETECTOR LOOP INSTALLATIONS
886006-01	TYPICAL LAYOUTS FOR DETECTION LOOPS

GENERAL NOTES

1. ALL REFERENCES TO "STANDARD SPECIFICATIONS" IN THESE GENERAL NOTES SHALL BE INTERPRETED TO MEAN "STANDARD SPECIFICATIONS FOR ROAD AND BRIDGE CONSTRUCTION" ADOPTED BY THE ILLINOIS DEPARTMENT OF TRANSPORTATION, JANUARY 1, 2022. THE SUPPLEMENTAL SPECIFICATIONS AND RECURRING SPECIAL PROVISIONS ADOPTED JANUARY 1, 2025. ALL WORK TO BE COMPLETED IN ACCORDANCE WITH THE STANDARD SPECIFICATIONS.

2. IT IS THE CONTRACTOR'S RESPONSIBILITY TO ASCERTAIN EXISTING FIELD CONDITIONS PRIOR TO BIDDING ON THE PROJECT.

3. BEFORE STARTING ANY EXCAVATION, THE CONTRACTOR SHALL CALL "JULIE" (JOINT UTILITY LOCATION INFORMATION FOR EXCAVATION) AT 8-1-1 IDOT AT (847) 705-4436 AND THE VILLAGE OF CARPENTERSVILLE AT (224) 293-1613 FOR FIELD LOCATIONS OF BURIED UTILITIES (48 HOURS NOTIFICATION IS REQUIRED).

4. ALL ELEVATIONS SHOWN ON THE PLANS ARE ON THE NAVD88 DATUM.

5. ALL RADII FOR PROPOSED CURB AND GUTTER ARE TO THE EDGE OF PAVEMENT, UNLESS OTHERWISE NOTED. CURB AND GUTTER ELEVATIONS SHOWN ALONG RETURNS AND AT POINTS OF CURVATURE, ETC. ARE TO THE EDGE OF PAVEMENT UNLESS OTHERWISE NOTED.

6. SAW CUTTING WILL BE REQUIRED FOR ALL REMOVAL ITEMS LISTED IN SECTION 440 OF THE STANDARD SPECIFICATIONS, SHOWN IN THE PLANS, AND AS DIRECTED BY THE ENGINEER.

7. DRIVEWAYS ARE TO BE CONSTRUCTED TO THE R.O.W. UNLESS OTHERWISE NOTED.

8. ABANDONED UNDERGROUND UTILITIES THAT CONFLICT WITH CONSTRUCTION SHALL BE DISPOSED OF OUTSIDE THE LIMITS OF THE RIGHT OF WAY ACCORDING TO ARTICLE 202.03 OF THE STANDARD SPECIFICATIONS AND AS DIRECTED BY THE ENGINEER.

9. THE ELEVATIONS SHOWN ON THE PLANS ARE FINISHED GRADES OF PROPOSED PAVEMENT, UNLESS OTHERWISE NOTED.

10. CURB RAMPS SHALL BE INSTALLED AT ALL INTERSECTING STREETS AND DRIVEWAYS PER CURRENT IDOT STANDARDS AT LOCATIONS WHERE SIDEWALK IS SHOWN ON THE PLAN.

11. THE CONTRACTOR SHALL NOT BE ALLOWED TO SET UP A YARD OR FIELD OFFICE ON VILLAGE OR IDOT PROPERTY WITHOUT WRITTEN CONSENT FROM THE VILLAGE OF CARPENTERSVILLE OR IDOT.

12. THE SUBGRADE STABILITY SHALL BE VERIFIED BY PROOF ROLLING WITH A FULLY LOADED TANDEM-AXEL TRUCK.

13. ANY AGGREGATE SUBGRADE IMPROVEMENT CONTAMINATED AND/OR DAMAGED BY THE CONTRACTOR'S VEHICLES AND/OR EQUIPMENTS IS TO REMOVED AND REPLACED AS DIRECTED BY THE ENGINEER.

14. AGGREGATE SUBGRADE IMPROVEMENT (CU.YD.) HAS BEEN PROVIDED FOR USE AT THE LOCATION INDICATED FOR SOILS THAT TEND TO BE UNSTABLE AND/OR UNSUITABLE. THE ACTUAL NEED FOR REMOVAL AND REPLACEMENT WITH AGGREGATE SUBGRADE IMPROVEMENT (CU.YD.) WILL BE IN THE FIELD AT THE TIME OF CONSTRUCTION BY THE GEOTECHNICAL ENGINEER. ALL POTENTIALLY UNSTABLE SOIL SHOULD BE TESTED WITH A STATIC AND/OR DYNAMIC CONE PENETROMETER AND TREATED IN ACCORDANCE WITH ARTICLE 301.04 OF THE SSRBC STANDARD AND CURRENT IDOT SUBGRADE STABILITY MANUAL. IF UNSTABLE AND/OR UNSUITABLE SOIL ARE NOT ENCOUNTER, THEN THE QUANTITY SHALL BE DEDUCTED AND NO ADDITIONAL COMPENSATION WILL BE DUE TO THE CONTRACTOR.

15. GEOTECHNICAL FABRIC FOR GROUND STABILIZATION AND/OR AGGREGATE SUBGRADE IMPROVEMENT (CU.YD.) HAVE BEEN PROVIDED FOR USE AT THE LOCATIONS INDICATED FOR SOILS THAT TEND TO BE UNSTABLE AND/OR UNSUITABLE. THE ACTUAL NEED FOR REMOVAL AND REPLACEMENT WITH ABOVE ITEM WILL BE DETERMINED IN THE FIELD AT THE TIME OF CONSTRUCTION BY THE GEOTECHNICAL ENGINEER. ALL POTENTIALLY UNSTABLE SOILS SHOULD BE TESTED WITH A STATIC OR DYNAMIC CONE PENETROMETER AND TREATED IN ACCORDANCE WITH ARTICLE 301.04 OF THE SSRBC AND IDOT SUBGRADE STABILITY MANUAL. IF UNSTABLE AND/OR UNSUITABLE SOILS ARE NOT ENCOUNTERED, THEN THE QUANTITY SHALL BE DEDUCTED AND NO ADDITIONAL COMPENSATION WILL BE DUE TO THE CONTRACTOR.

16. CONTRACTOR SHALL TAKE PRECAUTION BY PRESERVING EXISTING TREES WITHIN THE RIGHT OF WAY. IF ANY DAMAGE OCCURS, TREES SHALL BE REPLACED IN KIND PER ARTICLE 201.07. REPAIR IR REPLACEMENT OF EXISTING PLANT MATERIAL REQUIREMENTS STATED HEREIN.

17. THE RESIDENT ENGINEER SHALL CONTACT EMAD ALHUSSEINI, AREA TRAFFIC FIELD ENGINEER, VIA EMAIL AT EMAD.ALHUSSEINI@ILLINOIS.GOV A MINIMUM OF TWO (2) WEEKS PRIOR TO THE PLACEMENT OF PERMANENT PAVEMENT MARKINGS.

18. BEFORE BEGINNING ANY WORK, THE CONTRACTORS SHALL RETAIN AND RECORD FOR FUTURE REFERENCE, ALL EXISTING PAVEMENT MARKING LINES (AND RAISED REFLECTIVE PAVEMENT MARKERS) IN ORDER THAT THESE LOCATIONS CAN BE RE-ESTABLISHED FOR STRIPING. EXACT LOCATIONS OF ALL PAVEMENT MARKINGS SHALL BE SHOWN ON THE PLANS OR AS DIRECTED BY THE RESIDENT ENGINEER.

STORM SEWERS, WATER MAINS, AND UTILITIES

1. THE CONTRACTOR SHALL BE RESPONSIBLE FOR CONTACTING THE OWNERS OF ALL UTILITIES PRIOR TO CONSTRUCTION TO DETERMINE THE LOCATION OF ALL UTILITY EQUIPMENT. THE CONTRACTOR SHALL COOPERATE WITH ALL UTILITY OWNERS IN ACCORDANCE WITH THE STANDARD SPECIFICATIONS IF UTILITY RELOCATION, ADJUSTMENT, OR PROTECTION IS NECESSARY

2. THE LOCATION OF EXISTING DRAINAGE STRUCTURES, STORM SEWERS, WATER MAINS, SANITARY SEWERS, AND ANY OTHER PUBLIC OR PRIVATE UTILITIES AS SHOWN ON THE PLANS IS APPROXIMATE AND THEIR EXACT LOCATION IS TO BE DETERMINED IN THE FIELD BY THE CONTRACTOR.

3. THE CONTRACTOR SHALL BE RESPONSIBLE FOR THE PROTECTION OF ALL UNDERGROUND AND SURFACE UTILITIES EVEN THOUGH THEY MIGHT NOT BE SHOWN ON THE PLANS. ANY UTILITY PROPERTY DAMAGE DURING CONSTRUCTION SHALL BE REPAIRED OR REPLACED TO THE SATISFACTION OF THE OWNER BY THE CONTRACTOR.

4. ALL UTILITY COMPANIES SHALL BE NOTIFIED AT LEAST 3 DAYS PRIOR TO THE START OF CONSTRUCTION.

5. THE CONTRACTOR SHALL COORDINATE WITH THE VILLAGE OF CARPENTERSVILLE IF ANY UTILITY IMPROVEMENTS ARE REQUIRED BY THE VILLAGE WITHIN THE DURATION OF THE CONTRACT.

6. OFFSET LOCATIONS GIVEN IN THE PLANS FOR STRUCTURES, EDGE OF PAVEMENT, ETC. ARE FROM THE ROADWAY CENTERLINE.

7. FRAME ELEVATIONS GIVEN ON THE PLANS ARE ONLY TO ASSIST THE CONTRACTOR IN DETERMINING THE APPROXIMATE OVERALL HEIGHT OF THE STRUCTURE. FRAMES ON ALL NEW, ADJUSTED OR RECONSTRUCTED STRUCTURES WILL BE ADJUSTED TO THE FINAL ELEVATION OF THE AREA IN WHICH THEY ARE LOCATED AS PART OF THE STRUCTURE.

8. WHERE NEW WORK MEETS EXISTING FEATURES TO REMAIN, FIELD CHECK ALL DIMENSIONS AND ELEVATIONS BEFORE PROCEEDING WITH CONSTRUCTION, NOTIFY ENGINEER IMMEDIATELY OF ANY DISCREPANCIES.

9. ALL FRAMES, GRATES, LIDS, AND BOXES SCHEDULED TO BE REMOVED FROM EXISTING STUCTURES SHALL REMAIN THE PROPERTY AND BE DELIVERED TO THE VILLAGE OF CARPENTERSVILLE, AS APPLICABLE.

10. ANY LOOSE MATERIAL DEPOSITED IN THE FLOW LINE OF DRAINAGE STRUCTURES, WHICH OBSTRUCTS THE NATURAL FLOW OF WATER, SHALL BE REMOVED AT THE CLOSE OF EACH WORKING DAY. PRIOR TO ACCEPTANCE OF THE IMPROVEMENT, ALL DRAINAGE STRUCTURES SHALL BE FREE OF DIRT AND DEBRIS.

11. CONTRACTOR SHALL MAINTAIN THE CONVEYANCE OF ALL FLOWS DURING CONSTRUCTION OF THIS PROJECT. WHEN EXISTING DRAINAGE FACILITIES ARE DISTURBED, THE CONTRACTOR SHALL PROVIDE AND MAINTAIN TEMPORARY OUTLETS AND CONNECTIONS FOR ALL PRIVATE AND PUBLIC DRAINS, SEWERS, CULVERTS, AND OTHER DRAINAGE FACILITIES. THE CONTRACTOR SHALL PROVIDE FACILITIES TO TAKE IN ALL STORM WATER WHICH WILL BE RECEIVED BY THESE DRAINS AND SEWERS AND DISCHARGE THE SAME. THE CONTRACTOR SHALL PROVIDE AND MAINTAIN A PUMPING PLANT, IF NECESSARY, AND A TEMPORARY OUTLET AND BE PREPARED AT ALL TIMES TO DISPOSE OF THE WATER RECEIVED FROM THESE TEMPORARY CONNECTIONS UNTIL SUCH TIME THAT THE PERMANENT CONNECTIONS WITH SEWERS OR CULVERTS ARE BUILT AND IN SERVICE.

GENERAL NOTES CONTINUED

STORM SEWERS, WATER MAINS, AND UTILITIES (CONTINUED)

12. ALL FRAMES WITH CLOSED LIDS TO BE FURNISHED AS PART OF THE CONTRACT FOR CONSTRUCTION, ADJUSTMENT OR RECONSTRUCTION OF ANY MANHOLE, CATCH BASIN, INLET, VALVE VAULT OR METER VAULT SHALL HAVE CAST INTO THE LID ONE OF THE FOLLOWING WORDS: ALL LIDS TO BE USED ON WATER STRUCTURES SHALL BEAR THE WORD "WATER". ALL LIDS TO BE USED ON STORM SEWER STRUCTURES SHALL BEAR THE WORD "STORM". ALL LIDS TO BE USED ON SANITARY SYSTEM STRUCTURES SHALL BEAR THE WORD "SANITARY". REFER TO THE VILLAGE OF CARPENTERSVILLE DETAILS FOR ORDERING INFORMATION OR CONTACT THE DEPARTMENT OF PUBLIC WORKS.

13. ONLY PRECAST CONCRETE ADJUSTMENT RINGS, MAXIMUM OF 12" IN HEIGHT, WILL BE ALLOWED IN THE ADJUSTMENT OR RECONSTRUCTION OF CATCH BASIN, MANHOLE, INLET AND VALVE VAULT STRUCTURES. COMMON BRICK WILL NOT BE ALLOWED.

14. ALL DRAINAGE STRUCTURES LOCATED IN THE ROADWAY VERTICAL CURVE SAGES (LOW-POINTS) SHALL HAVE 4" SUB-SURFACE PAVEMENT DRAIN OPENINGS BLOCKED OUT (PRECAST) AS SHOWN IN THE PLAN DETAILS FOR UNDER DRAIN CONNECTIONS. CONTRACTOR SHALL NOTE THAT STRUCTURE.

15. THE INDISCRIMINATE USE OF FIRE HYDRANTS OR EXISTING STREAMS, CREEKS, WETLANDS, OR PONDS IS STRICTLY PROHIBITED. THE CONTRACTOR SHALL PROVIDE A WATER TRUCK AND DRIVER AS REQUIRED TO OBTAIN AND TRANSPORT THE WATER. THE CONTRACTOR SHALL BE RESPONSIBLE FOR OBTAINING WATER FROM AN APPROVED SOURCE. IF THIS WATER IS FROM A SOURCE OTHER THAN HIS YARD, WRITTEN APPROVAL FROM THE AGENCY HAVING JURISDICTION FOR THE SOURCE OF THE WATER MUST BE RECEIVED BY THE ENGINEER PRIOR TO USE OF THE WATER.

16. PIPE UNDERDRAINS SHALL BE INSTALLED ACCORDING TO SECTION 601 OF THE SSRBC AND STANDARD 601001-05. TOP OF PIPE UNDERDRAINS SHALL BE PLACED MINIMUM 6" BELOW THE AGGREGATE SUBGRADE IMPROVEMENT LAYER.

BACKFILL

1. ALL TRENCHES WITHIN KANE COUNTY ROW SHALL BE TRENCH BACKFILLED WITH FA-6 SAND IN ACCORDANCE WITH METHOD 1 IN ACCORDANCE WITH ARTICLE 550.07 OF THE (IDOT) STANDARD SPECIFICATIONS FOR ROAD AND BRIDGE CONSTRUCTION.

2. BACKFILLING STORM SEWER CONSTRUCTED UNDER THE ROADWAY SPECIFIED UNDER ART. 550.07 (b, c) OF THE SSRBC WILL NOT BE ALLOWED.

3. PROVIDE TRENCH BACKFILL FOR ALL UTILITY LINES WITHIN 2' OF PAVED AREAS. ALL TRENCH BACKFILL QUANTITIES FOR STORM SEWER HAVE BEEN COMPUTED AND SHALL BE PAID FOR IN ACCORDANCE WITH THE STATE OF ILLINOIS DEPARTMENT OF TRANSPORTATION DIVISION OF HIGHWAYS BUREAU OF CONSTRUCTION TRENCH BACKFILL TABLE, BASED ON PIPE SIZE AND INVERT DEPTH FROM SUBGRADE. BACK FILLING STORM AND SEWER CONSTRUCTED UNDER THE ROADWAY SPECIFIED UNDER ART. 550.07 (b, c) OF THE SSRBC WILL NOT BE ALLOWED.

4. THE AGGREGATE GRADATION FOR THE AGGREGATE SUBGRADE IMPROVEMENT 12" LOWER LIFT SHALL BE CS 1 OR RR 1.

SIGNING AND STRIPING

1. ALL SIGNS SHALL BE INSTALLED IN PERMANENT LOCATIONS AS THE ROADWAY IS COMPLETED.

2. SEE IDOT STANDARD DETAIL 780001, DISTRICT ONE DETAILS AND PLAN SHEETS FOR PAVEMENT MARKING DETAILS.

3. SIGNS SHALL NOT BE MOVED OR COVERED UNTIL PROGRESS OF WORK NECESSITATES IT.

4. IN ACCORDANCE TO ARTICLE 107.25 OF THE STANDARD SPECIFICATIONS, THE CONTRACTOR WILL BE REQUIRED TO TEMPORARY RESET ALL SUCH SIGNS THAT INTERFERE WITH HIS CONSTRUCTION OPERATIONS. ALL SUCH SIGNS MUST BE MAINTAINED STRAIGHT AND CLEAN FOR THE DURATION OF THE TEMPORARY SETTING AND MUST BE RE-ERECTED AT A TEMPORARY LOCATION IN A WORKMANLIKE MANNER AND BE VISIBLE TO THE TRAFFIC FOR WHICH IT IS INTENDED.

5. LONGER POSTS MAY BE REQUIRED AT SOME TEMPORARY OR PERMANENT SIGN LOCATIONS TO MAINTAIN PROPER SIGN ELEVATIONS. THIS WORK SHALL BE COMPLETED IN ACCORDANCE WITH SECTION 729 OF THE STANDARD SPECIFICATIONS.

EARTHWORK

1. SUBGRADE SHALL BE PREPARED IN ACCORDANCE WITH ARTICLE 301.04 OF THE STANDARD SPECIFICATIONS BEFORE REMOVAL OF ANY UNSTABLE MATERIAL.

2. PRIOR TO ANY EMBANKMENT PLACEMENT, ALL VEGETATION AND UNSTABLE MATERIAL SHOULD BE REMOVED TO DEPTH ENCOUNTERED AND REPLACED WITH SUITABLE EMBANKMENT MATERIAL AS APPROVED BY THE ENGINEER.

SEDIMENTATION AND EROSION CONTROL

1. SEE EROSION CONTROL PLANS FOR GENERAL NOTES CONCERNING EROSION CONTROL.

LANDSCAPE PLAN

1. THE CONTRACTOR SHALL TAKE EXTRA CARE IN GRADING AND EXCAVATING NEAR TREES WHICH ARE NOT MARKED FOR REMOVAL SO AS NOT TO CAUSE INJURY TO THE ROOT SYSTEM OR TRUNKS. ANY DAMAGE DONE TO EXISTING ITEMS BY THE CONTRACTOR SHALL BE REPAIRED BY THE CONTRACTOR AT THE CONTRACTOR'S OWN EXPENSE.

2. EXISTING VEGETATED AREAS (TREES, SHRUBS, VEGETATIVE BUFFERS, TURF AREAS, ETC.) WHERE DISTURBANCE IS NOT OCCURING (INCLUDING AREAS OUTSIDE THE PROJECT LIMITS) SHALL NOT BE DISTURBED TO ENSURE THAT EXISTING VEGETATION IS PRESERVED HEALTHY TO MINIMIZE SOIL EROSION AND TO ELIMINATE SOIL COMPACTION. NO MATERIALS ARE TO BE STORED OR VEHICLES DRIVEN OR PARKED WITHIN THESE UNDISTURBED AREAS AT ANY TIME.

3. ALL TREE PROTECTION, TREE REMOVAL, PRUNING, AND ROOT PRUNING SHALL BE COMPLETED BEFORE CONSTRUCTION OPERATIONS COMMENCE IN ANY AREA. AT NO TIME SHALL THE CONTRACTOR PRUNE OR REMOVE ANY TREES UNLESS SPECIFICALLY DIRECTED BY THE ENGINEER.

TRAFFIC CONTROL

1. THE CONTRACTOR SHALL CONTACT KALPANA KANNAN-HOSADURGA, THE DISTRICT ONE TRAFFIC CONTROL SUPERVISOR AT KALPANA.KANNAN-HOSADURGA@ILLINOIS.GOV A MINIMUM OF 72 HOURS IN ADVANCE OF BEGINNING WORK.

2. SEE TRAFFIC CONTROL PLANS FOR GENERAL NOTES CONCERNING TRAFFIC CONTROL AND PROTECTION.

LIGHTING PLANS

1. SEE LIGHTING PLANS FOR GENERAL NOTES CONCERNING LIGHTING DESIGN.

COMMITMENTS

NONE

PAYCODE	ITEM DESCRIPTION	UNIT	TOTAL	CONSTRUCTION CODE		
				ROADWAY 80% FEDERAL 20% STATE 0004	LIGHTING 80% FEDERAL 20% LOCAL 0021	100% LOCAL 004
20101100	TREE TRUNK PROTECTION	EACH	8	8		
20200100	EARTH EXCAVATION	CU YD	7,634	7,634		
20201200	REMOVAL AND DISPOSAL OF UNSUITABLE MATERIAL	CU YD	875	875		
20800150	TRENCH BACKFILL	CU YD	3,275	1,671		1,604
21001000	GEOTECHNICAL FABRIC FOR GROUND STABILIZATION	SQ YD	2,540	2,540		
21101615	TOPSOIL FURNISH AND PLACE, 4"	SQ YD	3,721	3,721		
25200110	SODDING, SALT TOLERANT	SQ YD	3,721	3,721		
25200200	SUPPLEMENTAL WATERING	UNIT	186	186		
28000250	TEMPORARY EROSION CONTROL SEEDING	POUND	77	77		
28000400	PERIMETER EROSION BARRIER	FOOT	867	867		
28000510	INLET FILTERS	EACH	65	65		
28001100	TEMPORARY EROSION CONTROL BLANKET	SQ YD	3,721	3,721		
30300001	AGGREGATE SUBGRADE IMPROVEMENT	CU YD	389	389		
30300112	AGGREGATE SUBGRADE IMPROVEMENT 12"	SQ YD	11,667	11,667		
31101400	SUBBASE GRANULAR MATERIAL, TYPE B 6"	SQ YD	3,300	3,300		
35501308	HOT-MIX ASPHALT BASE COURSE, 6"	SQ YD	10,157	10,157		

+ SPECIALTY ITEM
X CONSTRUCTION TYPE CODE 0042

MODEL: ScQ-01 [Sheet]
FILE NAME: \\hrgreen.com\hrg\Data\2020\201569\CAD\Sheets\201569-sht-soq.dgn

HRGreen.com
Illinois Professional Design Firm # 184-001322
HRGreen

USER NAME = jhorwit	DESIGNED -	REVISED - XX/XX/XXXX	STATE OF ILLINOIS - DEPARTMENT OF TRANSPORTATION
	DRAWN - BJB	REVISED - XX/XX/XXXX	
PLOT SCALE = 0.16666633 ' / in.	CHECKED -	REVISED - XX/XX/XXXX	
PLOT DATE = 5/20/2025	DATE - 4/21/2025	REVISED - XX/XX/XXXX	

SUMMARY OF QUANTITIES
L.W. BESINGER DRIVE

SCALE: N.T.S. | SHEET 1 OF 13 SHEETS | STA. TO STA.

X RTE.	SECTION	COUNTY	TOTAL SHEETS	SHEET NO.
4006	22-00094-00-FP	KANE	105	5
		CONTRACT NO. 61L58		
	ILLINOIS	FED. AID PROJECT		

PAYCODE	ITEM DESCRIPTION	UNIT	TOTAL	CONSTRUCTION CODE ROADWAY 80% FEDERAL 20% STATE 0004	LIGHTING 80% FEDERAL 20% LOCAL 0021	100% LOCAL 004
35501316	HOT-MIX ASPHALT BASE COURSE, 8"	SQ YD	1,624	1,624		
40600275	BITUMINOUS MATERIALS (PRIME COAT)	POUND	9,608	9,608		
40600290	BITUMINOUS MATERIALS (TACK COAT)	POUND	32,466	29,707		2,759
40600370	LONGITUDINAL JOINT SEALANT	FOOT	6,735	6,735		
40600982	HOT-MIX ASPHALT SURFACE REMOVAL - BUTT JOINT	SQ YD	75			75
40603080	HOT-MIX ASPHALT BINDER COURSE, IL-19.0, N50	TON	334	334		
40603200	POLYMERIZED HOT-MIX ASPHALT BINDER COURSE, IL-4.75, N50	TON	172			172
40604060	HOT-MIX ASPHALT SURFACE COURSE, IL-9.5, MIX "D", N50	TON	748	405		343
40701871	HOT MIX ASPHALT PAVEMENT (FULL DEPTH), 9 1/2"	SQ YD	10,157	8,282		1,875
42400200	PORTLAND CEMENT CONCRETE SIDEWALK 5 INCH	SQ FT	6,057	6,057		
42400800	DETECTABLE WARNINGS	SQ FT	171	171		
44000100	PAVEMENT REMOVAL	SQ YD	11,590	9,450		2,140
44000157	HOT-MIX ASPHALT SURFACE REMOVAL, 2"	SQ YD	4,088			4,088
44000200	DRIVEWAY PAVEMENT REMOVAL	SQ YD	1,365	1,365		
44000500	COMBINATION CURB AND GUTTER REMOVAL	FOOT	3,287	3,287		
44000600	SIDEWALK REMOVAL	SQ FT	5,079	5,079		

+ SPECIALTY ITEM
X CONSTRUCTION TYPE CODE 0042

MODEL: SoQ-2 [Sheet]
FILE NAME: \\hrgreen.com\hrg\Data\2020\2201569\CAD\Sheets\2201569-sht-soq.dgn

HRGreen.com
Illinois Professional Design Firm # 184-001322
HRGreen

USER NAME = jhorwit	DESIGNED -	REVISED -	
	DRAWN -	REVISED -	
PLOT SCALE = 0.16666633 ' / in.	CHECKED -	REVISED -	
PLOT DATE = 5/20/2026	DATE -	REVISED -	

STATE OF ILLINOIS - DEPARTMENT OF TRANSPORTATION

SUMMARY OF QUANTITIES
L.W. BESINGER DRIVE

SCALE: SHEET 2 OF 13 SHEETS STA. TO STA.

F.A.U. RTE.	SECTION	COUNTY	TOTAL SHEETS	SHEET NO.
4006	22-00094-00-FP	KANE	105	6

CONTRACT NO. 61L58

ILLINOIS FED. AID PROJECT

PAYCODE	ITEM DESCRIPTION	UNIT	TOTAL	CONSTRUCTION CODE ROADWAY 80% FEDERAL 20% STATE 0004	LIGHTING 80% FEDERAL 20% LOCAL 0021	100% LOCAL 004
44201761	CLASS D PATCHES, TYPE I, 10 INCH	SQ YD	23			23
44201765	CLASS D PATCHES, TYPE II, 10 INCH	SQ YD	10			10
44201769	CLASS D PATCHES, TYPE III, 10 INCH	SQ YD	10			10
44201771	CLASS D PATCHES, TYPE IV, 10 INCH	SQ YD	5			5
54214527	PRECAST REINFORCED CONCRETE FLARED END SECTIONS, EQUIVALENT ROUND-SIZE 42"	EACH	1	1		
550A0050	STORM SEWERS, CLASS A, TYPE 1 12"	FOOT	407	407		
550A0070	STORM SEWERS, CLASS A, TYPE 1 15"	FOOT	175	175		
550A0090	STORM SEWERS, CLASS A, TYPE 1 18"	FOOT	107	107		
550A0120	STORM SEWERS, CLASS A, TYPE 1 24"	FOOT	282	282		
550A0140	STORM SEWERS, CLASS A, TYPE 1 30"	FOOT	58	58		
550A0160	STORM SEWERS, CLASS A, TYPE 1 36"	FOOT	53	53		
550A0340	STORM SEWERS, CLASS A, TYPE 2 12"	FOOT	63	63		
550A0360	STORM SEWERS, CLASS A, TYPE 2 15"	FOOT	47	47		
550A0410	STORM SEWERS, CLASS A, TYPE 2 24"	FOOT	759	759		
550A0430	STORM SEWERS, CLASS A, TYPE 2 30"	FOOT	412	412		
550A2320	STORM SEWERS, RUBBER GASKET, CLASS A, TYPE 1 12"	FOOT	350	350		

+ SPECIALTY ITEM
X CONSTRUCTION TYPE CODE 0042

MODEL: SoQ-3 [Sheet]
FILE NAME: \\hrgreen.com\hrgData\2020\201569\CAD\Sheets\201569-sht-soq.dgn

PAYCODE	ITEM DESCRIPTION	UNIT	TOTAL	CONSTRUCTION CODE ROADWAY 80% FEDERAL 20% STATE 0004	LIGHTING 80% FEDERAL 20% LOCAL 0021	100% LOCAL 004
550A2330	STORM SEWERS, RUBBER GASKET, CLASS A, TYPE 1 15"	FOOT	85	85		
550A2340	STORM SEWERS, RUBBER GASKET, CLASS A, TYPE 1 18"	FOOT	27	27		
550A2360	STORM SEWERS, RUBBER GASKET, CLASS A, TYPE 1 24"	FOOT	177	177		
550A2520	STORM SEWERS, RUBBER GASKET, CLASS A, TYPE 2 12"	FOOT	35	35		
550A2530	STORM SEWERS, RUBBER GASKET, CLASS A, TYPE 2 15"	FOOT	83	83		
550A2560	STORM SEWERS, RUBBER GASKET, CLASS A, TYPE 2 24"	FOOT	81	81		
550A2580	STORM SEWERS, RUBBER GASKET, CLASS A, TYPE 2 30"	FOOT	140	140		
550A4300	STORM SEWERS, CLASS A, TYPE 1 EQUIVALENT ROUND-SIZE 30"	FOOT	28	28		
550A4700	STORM SEWERS, CLASS A, TYPE 1 EQUIVALENT ROUND-SIZE 42"	FOOT	5	5		
55100400	STORM SEWER REMOVAL 10"	FOOT	219	219		
55100500	STORM SEWER REMOVAL 12"	FOOT	149	149		
55100700	STORM SEWER REMOVAL 15"	FOOT	125	125		
55100900	STORM SEWER REMOVAL 18"	FOOT	216	216		
55101100	STORM SEWER REMOVAL 21"	FOOT	185	185		
55101200	STORM SEWER REMOVAL 24"	FOOT	1,267	1,267		
55101300	STORM SEWER REMOVAL 27"	FOOT	280	280		

+ SPECIALTY ITEM
X CONSTRUCTION TYPE CODE 0042

MODEL: SoQ-4 [Sheet]
FILE NAME: \\hrgreen.com\hrg\Data\2022\2201559\CAD\Sheets\201559-sht-soq.dgn

HRGreen.com
Illinois Professional Design Firm
184-001322
HRGreen.

USER NAME = jhorwit	DESIGNED -	REVISED -	
	DRAWN -	REVISED -	
PLOT SCALE = 0.16666633 ' / in.	CHECKED -	REVISED -	
PLOT DATE = 5/20/2025	DATE -	REVISED -	

STATE OF ILLINOIS - DEPARTMENT OF TRANSPORTATION

SUMMARY OF QUANTITIES
L.W. BESINGER DRIVE

SCALE: | SHEET 4 OF 13 SHEETS | STA. | TO STA.

F.A.U. RTE.	SECTION	COUNTY	TOTAL SHEETS	SHEET NO.
4006	22-00094-00-FP	KANE	105	8

CONTRACT NO. 61L58

ILLINOIS | FED. AID PROJECT

	PAYCODE	ITEM DESCRIPTION	UNIT	TOTAL	CONSTRUCTION CODE		
					ROADWAY 80% FEDERAL 20% STATE 0004	LIGHTING 80% FEDERAL 20% LOCAL 0021	100% LOCAL 004
	55101400	STORM SEWER REMOVAL 30"	FOOT	37	37		
+	56103100	DUCTILE IRON WATER MAIN 8"	FOOT	2,263			2,263
+	56105000	WATER VALVES 8"	EACH	9			9
+	56400100	FIRE HYDRANTS TO BE MOVED	EACH	2			2
+	56400500	FIRE HYDRANTS TO BE REMOVED	EACH	5			5
+	56400820	FIRE HYDRANT WITH AUXILIARY VALVE AND VALVE BOX	EACH	7			7
	60108204	PIPE UNDERDRAINS, TYPE 2, 4"	FOOT	873	873		
	60201105	CATCH BASINS, TYPE A, 4'-DIAMETER, TYPE 11 FRAME AND GRATE	EACH	12	12		
	60201340	CATCH BASINS, TYPE A, 4'-DIAMETER, TYPE 24 FRAME AND GRATE	EACH	1	1		
	60204805	CATCH BASINS, TYPE A, 5'-DIAMETER, TYPE 11 FRAME AND GRATE	EACH	5	5		
	60206905	CATCH BASINS, TYPE C, TYPE 1 FRAME, OPEN LID	EACH	1	1		
	60207905	CATCH BASINS, TYPE C, TYPE 11 FRAME AND GRATE	EACH	10	10		
	60208240	CATCH BASINS, TYPE C, TYPE 24 FRAME AND GRATE	EACH	1	1		
	60221100	MANHOLES, TYPE A, 5'-DIAMETER, TYPE 1 FRAME, CLOSED LID	EACH	14	14		
	60222000	MANHOLES, TYPE A, 5'-DIAMETER, TYPE 11 FRAME AND GRATE	EACH	1	1		
	60223800	MANHOLES, TYPE A, 6'-DIAMETER, TYPE 1 FRAME, CLOSED LID	EACH	15	15		

+ SPECIALTY ITEM
X CONSTRUCTION TYPE CODE 0042

MODEL: SoC-S [Sheet]
FILE NAME: \\hrgreen.com\hrg\Data\2020\20015691CAD\Sheets\201569-sht-soq.dgn

HRGreen.com
Illinois Professional Design Firm # 184-001322
HRGreen

USER NAME = jhorwit	DESIGNED -	REVISED -	
	DRAWN -	REVISED -	
PLOT SCALE = 0.16666633 ' / in.	CHECKED -	REVISED -	
PLOT DATE = 5/20/2025	DATE -	REVISED -	

STATE OF ILLINOIS - DEPARTMENT OF TRANSPORTATION

SUMMARY OF QUANTITIES
L.W. BESINGER DRIVE

SCALE: | SHEET 5 OF 13 SHEETS | STA. | TO STA.

F.A.U. RTE.	SECTION	COUNTY	TOTAL SHEETS	SHEET NO.
4006	22-00094-00-FP	KANE	105	9

CONTRACT NO. 61L58

ILLINOIS | FED. AID PROJECT

	PAYCODE	ITEM DESCRIPTION	UNIT	TOTAL	CONSTRUCTION CODE ROADWAY 80% FEDERAL 20% STATE 0004	LIGHTING 80% FEDERAL 20% LOCAL 0021	100% LOCAL 004
	60224020	MANHOLES, TYPE A, 6'-DIAMETER, TYPE 11 FRAME AND GRATE	EACH	5	5		
	60224446	MANHOLES, TYPE A, 7'-DIAMETER, TYPE 1 FRAME, CLOSED LID	EACH	3	3		
	60236800	INLETS, TYPE A, TYPE 11 FRAME AND GRATE	EACH	8	8		
	60237470	INLETS, TYPE A, TYPE 24 FRAME AND GRATE	EACH	2	2		
	60248700	VALVE VAULTS, TYPE A, 4'-DIAMETER, TYPE 1 FRAME, CLOSED LID	EACH	3			3
	60248900	VALVE VAULTS, TYPE A, 5'-DIAMETER, TYPE 1 FRAME, CLOSED LID	EACH	6			6
	60300305	FRAMES AND LIDS TO BE ADJUSTED	EACH	15			15
	60500040	REMOVING MANHOLES	EACH	26	26		
	60500060	REMOVING INLETS	EACH	13	13		
	60603800	COMBINATION CONCRETE CURB AND GUTTER, TYPE B-6.12	FOOT	5,421	5,421		
	60605000	COMBINATION CONCRETE CURB AND GUTTER, TYPE B-6.24	FOOT	265	265		
+	63000001	STEEL PLATE BEAM GUARDRAIL, TYPE A, 6 FOOT POSTS	FOOT	113	113		
+	63100045	TRAFFIC BARRIER TERMINAL, TYPE 2	EACH	1	1		
+	63100167	TRAFFIC BARRIER TERMINAL, TYPE 1 (SPECIAL) TANGENT	EACH	1	1		
	63200310	GUARDRAIL REMOVAL	FOOT	87	87		
+	66900200	NON-SPECIAL WASTE DISPOSAL	CU YD	1,200	1,200		

+ SPECIALTY ITEM
X CONSTRUCTION TYPE CODE 0042

MODEL: SoC-6 [Sheet]
FILE NAME: \\hrgreen.com\hrgIData\2020\20215695\CAD\Sheets\201569-sh-soq.dgn

HRGreen.com
Illinois Professional Design Firm # 184-001322
HRGreen

USER NAME = jherwk	DESIGNED -	REVISED -
	DRAWN -	REVISED -
PLOT SCALE = 0.166666633 ' / in.	CHECKED -	REVISED -
PLOT DATE = 5/20/2025	DATE -	REVISED -

STATE OF ILLINOIS - DEPARTMENT OF TRANSPORTATION

SUMMARY OF QUANTITIES
L.W. BESINGER DRIVE

SCALE: | SHEET 6 OF 13 SHEETS | STA. | TO STA.

F.A.U. RTE.	SECTION	COUNTY	TOTAL SHEETS	SHEET NO.
4006	22-00094-00-FP	KANE	105	10

CONTRACT NO. 61L58

ILLINOIS | FED. AID PROJECT

	PAYCODE	ITEM DESCRIPTION	UNIT	TOTAL	CONSTRUCTION CODE ROADWAY 80% FEDERAL 20% STATE 0004	LIGHTING 80% FEDERAL 20% LOCAL 0021	100% LOCAL 004
+	66900530	SOIL DISPOSAL ANALYSIS	EACH	2	2		
+	66901001	REGULATED SUBSTANCES PRE-CONSTRUCTION PLAN	LSUM	1	1		
+	66901003	REGULATED SUBSTANCES FINAL CONSTRUCTION REPORT	LSUM	1	1		
+	66901006	REGULATED SUBSTANCES MONITORING	CAL DA	100	100		
	67000400	ENGINEER'S FIELD OFFICE, TYPE A	CAL MO	4	4		
	67100100	MOBILIZATION	L SUM	1	1		
	70107025	CHANGEABLE MESSAGE SIGN	CAL DA	730	730		
	70300100	SHORT TERM PAVEMENT MARKING	FOOT	6,338	6,338		
	70300150	SHORT TERM PAVEMENT MARKING REMOVAL	SQ FT	9,143	9,143		
	70300211	TEMPORARY PAVEMENT MARKING LETTERS AND SYMBOLS - PAINT	SQ FT	188	188		
	70300221	TEMPORARY PAVEMENT MARKING - LINE 4"- PAINT	FOOT	5,739	5,739		
	70300241	TEMPORARY PAVEMENT MARKING - LINE 6"- PAINT	FOOT	1,150	1,150		
	70300261	TEMPORARY PAVEMENT MARKING - LINE 12"- PAINT	FOOT	776	776		
	70300281	TEMPORARY PAVEMENT MARKING - LINE 24"- PAINT	FOOT	120	120		
	70307120	TEMPORARY PAVEMENT MARKING - LINE 4" - TYPE IV TAPE	FOOT	14,632	14,632		
	70307210	TEMPORARY PAVEMENT MARKING - LINE 24"- TYPE IV TAPE	FOOT	22	22		

+ SPECIALTY ITEM
X CONSTRUCTION TYPE CODE 0042

MODEL: SoO-7 [Sheet]
FILE NAME: \\hrgreen.com\hrg\Data\2020\201569\CAD\Sheets\201569-sht-soq.dgn

HRGreen.com
Illinois Professional Design Firm # 184-001322
HRGreen

USER NAME = jhorvit	DESIGNED -	REVISED -	
	DRAWN -	REVISED -	
PLOT SCALE = 0.16666633 '/in.	CHECKED -	REVISED -	
PLOT DATE = 6/12/2025	DATE -	REVISED -	

STATE OF ILLINOIS - DEPARTMENT OF TRANSPORTATION

SUMMARY OF QUANTITIES
L.W. BESINGER DRIVE

SCALE: | SHEET 7 OF 13 SHEETS | STA. | TO STA.

F.A.U. RTE.	SECTION	COUNTY	TOTAL SHEETS	SHEET NO.
4006	22-00094-00-FP	KANE	105	11

CONTRACT NO. 61L58

ILLINOIS | FED. AID PROJECT

	PAYCODE	ITEM DESCRIPTION	UNIT	TOTAL	CONSTRUCTION CODE		
					ROADWAY 80% FEDERAL 20% STATE 0004	LIGHTING 80% FEDERAL 20% LOCAL 0021	100% LOCAL 004
+	72000100	SIGN PANEL - TYPE 1	SQ FT	82	82		
	72400100	REMOVE SIGN PANEL ASSEMBLY - TYPE A	EACH	3	3		
	72400500	RELOCATE SIGN PANEL ASSEMBLY - TYPE A	EACH	12	12		
+	72800100	TELESCOPING STEEL SIGN SUPPORT	FOOT	150	150		
+	78000100	THERMOPLASTIC PAVEMENT MARKING - LETTERS AND SYMBOLS	SQ FT	136	136		
+	78000200	THERMOPLASTIC PAVEMENT MARKING - LINE 4"	FOOT	3,770	3,770		
+	78000400	THERMOPLASTIC PAVEMENT MARKING - LINE 6"	FOOT	789	789		
+	78000600	THERMOPLASTIC PAVEMENT MARKING - LINE 12"	FOOT	395	395		
+	78000650	THERMOPLASTIC PAVEMENT MARKING - LINE 24"	FOOT	195	195		
+	78100100	RAISED REFLECTIVE PAVEMENT MARKER	EACH	123	123		
+	78200005	GUARDRAIL REFLECTORS, TYPE A	EACH	4	4		
	78300201	PAVEMENT MARKING REMOVAL - GRINDING	SQ FT	4,090	4,090		
	78300202	PAVEMENT MARKING REMOVAL - WATER BLASTING	SQ FT	4,090	4,090		
+	80400100	ELECTRIC SERVICE INSTALLATION	EACH	2	2		
+	80400200	ELECTRIC UTILITY SERVICE CONNECTION	L SUM	1	1		
+	81028220	UNDERGROUND CONDUIT, GALVANIZED STEEL, 3" DIA.	FOOT	30	30		

+ SPECIALTY ITEM
X CONSTRUCTION TYPE CODE 0042

MODEL: SoC-8 [Sheet]
FILE NAME: \\hrgreen.com\hrg\Data\2020\201569\CAD\Sheets\201569-sht-soq.dgn

	PAYCODE	ITEM DESCRIPTION	UNIT	TOTAL	CONSTRUCTION CODE ROADWAY 80% FEDERAL 20% STATE 0004	LIGHTING 80% FEDERAL 20% LOCAL 0021	100% LOCAL 004
+	81028240	UNDERGROUND CONDUIT, GALVANIZED STEEL, 4" DIA.	FOOT	389	355	34	
+	81400100	HANDHOLE	EACH	2	2		
+	81400300	DOUBLE HANDHOLE	EACH	1	1		
+	81603096	UNIT DUCT, 600V, 4-1C NO.8, 1/C NO.8 GROUND, (XLP-TYPE USE), 1 1/4" DIA. POLYETHYLENE	FOOT	3,115		3,115	
+	83006300	LIGHT POLE, ALUMINUM, 30 FT. M.H., 8 FT. MAST ARM	EACH	21		21	
+	83600200	LIGHT POLE FOUNDATION, 24" DIAMETER	FOOT	180		180	
+	83800105	BREAKAWAY DEVICE, TRANSFORMER BASE, 11.5 INCH BOLT CIRCLE	EACH	21		21	
+	84200500	REMOVAL OF LIGHTING UNIT, SALVAGE	EACH	2		2	
+	84200804	REMOVAL OF POLE FOUNDATION	EACH	2		2	
+	85000200	MAINTENANCE OF EXISTING TRAFFIC SIGNAL INSTALLATION	EACH	1	1		
+	87301245	ELECTRIC CABLE IN CONDUIT, SIGNAL NO. 14 5C	FOOT	695	695		
+	87301255	ELECTRIC CABLE IN CONDUIT, SIGNAL NO. 14 7C	FOOT	815	815		
+	87301305	ELECTRIC CABLE IN CONDUIT, LEAD-IN, NO. 14 1 PAIR	FOOT	406	406		
+	87301900	ELECTRIC CABLE IN CONDUIT, EQUIPMENT GROUNDING CONDUCTOR, NO. 6 1C	FOOT	424	424		
+	87501200	TRAFFIC SIGNAL POST, 16 FT.	EACH	2	2		
+	87700180	STEEL MAST ARM ASSEMBLY AND POLE, 28 FT.	EACH	1	1		

+ SPECIALTY ITEM
X CONSTRUCTION TYPE CODE 0042

MODEL: SoQ-9 [Sheet]
FILE NAME: \\hrgreen.com\hrg\Data\2020\20156919\CAD\Sheets\2015669-sht-soq.dgn

HRGreen.com
Illinois Professional Design Firm
184-001322
HRGreen.

USER NAME = jhorwit	DESIGNED -	REVISED -	
	DRAWN -	REVISED -	
PLOT SCALE = 0.16666833 ' / in.	CHECKED -	REVISED -	
PLOT DATE = 5/20/2025	DATE -	REVISED -	

STATE OF ILLINOIS - DEPARTMENT OF TRANSPORTATION

SUMMARY OF QUANTITIES
L.W. BESINGER DRIVE

SCALE: | SHEET 9 OF 13 SHEETS | STA. | TO STA.

F.A.U. RTE.	SECTION	COUNTY	TOTAL SHEETS	SHEET NO.
4006	22-00094-00-FP	KANE	105	13

CONTRACT NO. 61L58

ILLINOIS | FED. AID PROJECT

	PAYCODE	ITEM DESCRIPTION	UNIT	TOTAL	CONSTRUCTION CODE ROADWAY 80% FEDERAL 20% STATE 0004	LIGHTING 80% FEDERAL 20% LOCAL 0021	100% LOCAL 004
+	87800100	CONCRETE FOUNDATION, TYPE A	FOOT	8	8		
+	87800415	CONCRETE FOUNDATION, TYPE E 36-INCH DIAMETER	FOOT	10	10		
+	87900200	DRILL EXISTING HANDHOLE	EACH	3	3		
+	88030020	SIGNAL HEAD, LED, 1-FACE, 3-SECTION, MAST-ARM MOUNTED	EACH	3	3		
+	88030050	SIGNAL HEAD, LED, 1-FACE, 3-SECTION, BRACKET MOUNTED	EACH	6	6		
+	88030100	SIGNAL HEAD, LED, 1-FACE, 5-SECTION, BRACKET MOUNTED	EACH	3	3		
+	88030110	SIGNAL HEAD, LED, 1-FACE, 5-SECTION, MAST-ARM MOUNTED	EACH	2	2		
+	88200410	TRAFFIC SIGNAL BACKPLATE, LOUVERED, FORMED PLASTIC	EACH	5	5		
+	88500100	INDUCTIVE LOOP DETECTOR	EACH	1	1		
+	88600100	DETECTOR LOOP, TYPE I	FOOT	244	244		
X +	89501250	RELOCATE EXISTING TRAFFIC SIGNAL EQUIPMENT	EACH	1	1		
+	89502200	MODIFY EXISTING CONTROLLER	EACH	1	1		
+	89502300	REMOVE ELECTRIC CABLE FROM CONDUIT	FOOT	693	693		
X +	89502375	REMOVE EXISTING TRAFFIC SIGNAL EQUIPMENT	EACH	1	1		
+	89502380	REMOVE EXISTING HANDHOLE	EACH	2	2		
+	89502385	REMOVE EXISTING CONCRETE FOUNDATION	EACH	2	2		

+ SPECIALTY ITEM
X CONSTRUCTION TYPE CODE 0042

MODEL: SoQ10 [Sheet]
FILE NAME: \\hrgreen.com\hrg\Data\2020\201569\CAD\Sheets\201569-sht-soq.dgn

HRGreen.com
Illinois Professional Design Firm
184-001322
HRGreen

USER NAME = jhorwit	DESIGNED -	REVISED -	
	DRAWN -	REVISED -	
PLOT SCALE = 0.16666633 ' / in.	CHECKED -	REVISED -	
PLOT DATE = 5/20/2025	DATE -	REVISED -	

STATE OF ILLINOIS - DEPARTMENT OF TRANSPORTATION

SUMMARY OF QUANTITIES
L.W. BESINGER DRIVE

SCALE: | SHEET 10 OF 13 SHEETS | STA. | TO STA.

F.A.U. RTE.	SECTION	COUNTY	TOTAL SHEETS	SHEET NO.
4006	22-00094-00-FP	KANE	105	14
		CONTRACT NO. 61L58		
	ILLINOIS	FED. AID PROJECT		

	PAYCODE	ITEM DESCRIPTION	UNIT	TOTAL	CONSTRUCTION CODE ROADWAY 80% FEDERAL 20% STATE 0004	LIGHTING 80% FEDERAL 20% LOCAL 0021	100% LOCAL 004
	X0322916	PROPOSED STORM SEWER CONNECTION TO EXISTING STORM SEWER	EACH	1	1		
+	X0323760	SANITARY SEWER SERVICE, 6" PVC, COMPLETE	EACH	1	1		
+	X0324636	WATER VALVE BOXES TO BE ABANDONED	EACH	8			8
+	X0328629	ABANDON AND FILL EXISTING SANITARY SEWER (CLSM), 6"	FOOT	39			39
+	X0328630	ABANDON AND FILL EXISTING SANITARY SEWER (CLSM), 8"	FOOT	946			946
+	XX009718	ABANDON AND FILL EXISTING SANITARY SEWER (CLSM), 15"	FOOT	9			9
+	X1200015	VALVE VAULTS TO BE ABANDONED	EACH	2			2
+	X1200309	WATER MAIN QUALITY CASING PIPE, 18"	FOOT	22			22
+	X2130010	EXPLORATION TRENCH (SPECIAL)	FOOT	100	100		
	X4022000	TEMPORARY ACCESS (COMMERCIAL ENTRANCE)	EACH	16	16		
	X4023000	TEMPORARY ACCESS (ROAD)	EACH	5	5		
+	X5430208	CURED-IN-PLACE PIPE LINER, 8"	FOOT	1,107			1,107
+	X5510312	SANITARY SEWER REMOVAL 12"	FOOT	74			74
+	X5510318	SANITARY SEWER REMOVAL, 18"	FOOT	43			43
+	X5610656	WATER MAIN TO BE ABANDONED, 6"	FOOT	2,187			2,187
+	X5610752	WATER MAIN LINE STOP 12"	EACH	1			1

+ SPECIALTY ITEM
X CONSTRUCTION TYPE CODE 0042

MODEL: SoC-11 [Sheet]
FILE NAME: \\hrgreen.com\hrg\Data\2020\2015\69\CAD\Sheets\2015169-sht-soq.dgn

HRGreen.com
Illinois Professional Design Firm
184-001322
HRGreen.

USER NAME = jhorwit	DESIGNED -	REVISED -	
	DRAWN - BJB	REVISED -	
PLOT SCALE = 0.16666833 ' / in.	CHECKED -	REVISED -	
PLOT DATE = 5/20/2025	DATE - 4/21/2025	REVISED -	

STATE OF ILLINOIS - DEPARTMENT OF TRANSPORTATION

SUMMARY OF QUANTITIES
I.W. BESINGER DRIVE

SCALE: N.T.S. | SHEET 11 OF 13 SHEETS | STA. | TO STA.

F.A.U. RTE.	SECTION	COUNTY	TOTAL SHEETS	SHEET NO.
4008	22-00094-00-FP	KANE	105	15
		CONTRACT NO. 61L58		
	ILLINOIS	FED. AID PROJECT		

	PAYCODE	ITEM DESCRIPTION	UNIT	TOTAL	CONSTRUCTION CODE ROADWAY 80% FEDERAL 20% STATE 0004	LIGHTING 80% FEDERAL 20% LOCAL 0021	100% LOCAL 004
+	X5620118	WATER SERVICE CONNECTION (LONG)	EACH	1			1
+	X5630706	CONNECTION TO EXISTING WATER MAIN 6"	EACH	3			3
+	X5630708	CONNECTION TO EXISTING WATER MAIN 8"	EACH	1			1
+	X5630712	CONNECTION TO EXISTING WATER MAIN 12"	EACH	1			1
+	X5630716	CONNECTION TO EXISTING WATER MAIN 16"	EACH	1			1
+	X6022312	DROP SANITARY MANHOLES, WITH TYPE 1 FRAME, CLOSED LID	EACH	1			1
+	X6022810	MANHOLES, SANITARY, 4'-DIAMETER, TYPE 1 FRAME, CLOSED LID	EACH	6			6
+	X6022830	MANHOLES, SANITARY, 6'-DIAMETER, TYPE 1 FRAME, CLOSED LID	EACH	1			1
	X6025620	CATCH BASINS, TYPE A, 5'-DIAMETER, WITH SPECIAL FRAME AND GRATE	EACH	1	1		
+	X6026054	SANITARY MANHOLES TO BE REMOVED	EACH	4			4
	X6029510	CATCH BASINS, TYPE C, WITH SPECIAL FRAME AND GRATE	EACH	6	6		
	X6030310	FRAMES AND LIDS TO BE ADJUSTED (SPECIAL)	EACH	10	10		
	X7010216	TRAFFIC CONTROL AND PROTECTION, (SPECIAL)	L SUM	1	1		
	X7200061	TEMPORARY INFORMATION SIGNING	SQ FT	100	100		
+	X8000003	MAINTENANCE OF LIGHTING SYSTEM	CAL MO	3		3	
+	X8360215	LIGHT POLE FOUNDATION, 24" DIAMETER, OFFSET	FOOT	9		9	

+ SPECIALTY ITEM
X CONSTRUCTION TYPE CODE 0042

MODEL: SuQ-12 [Sheet]
FILE NAME: \\hrgreen.com\hrgData\2020\20215569\CAD\Sheets\201569-alt-soq.dgn

	PAYCODE	ITEM DESCRIPTION	UNIT	TOTAL	CONSTRUCTION CODE		
					ROADWAY 80% FEDERAL 20% STATE 0004	LIGHTING 80% FEDERAL 20% LOCAL 0021	100% LOCAL 004
+	X8809005	LED SIGNAL FACE, LENS COVER	EACH	14	14		
+	X8900104	TEMPORARY TRAFFIC SIGNAL TIMING	EACH	1	1		
+	XX009551	LUMINAIRE, LED, ROADWAY	EACH	21		21	
	Z0013798	CONSTRUCTION LAYOUT	L SUM	1	1		
+	Z0033020	LUMINAIRE SAFETY CABLE ASSEMBLY	EACH	21		21	
+	Z0033044	RE-OPTIMIZE TRAFFIC SIGNAL SYSTEM LEVEL 1	EACH	1	1		
+	Z0056900	SANITARY SEWER 8"	FOOT	610			610
+	Z0057300	SANITARY SEWER 18"	FOOT	67			67
	Z0062456	TEMPORARY PAVEMENT	SQ YD	250	250		
	Z0062458	TEMPORARY PAVEMENT (VARIABLE DEPTH)	TON	5	5		
X	Z0076600	TRAINEES	HOUR	500	500		
X	Z0076604	TRAINEES TRAINING PROGRAM GRADUATE	HOUR	500	500		

+ SPECIALTY ITEM
X CONSTRUCTION TYPE CODE 0042

MODEL: SoQ-13 [Sheet]
FILE NAME: \\hrgreen.com\hrg\Data\2020\20201569\CAD\Sheets\201569-sht-soq.dgn

HRGreen.com
Illinois Professional Design Firm # 184-001322
HRGreen.

USER NAME = jhorwit	DESIGNED -	REVISED -	
	DRAWN - BJB	REVISED -	
PLOT SCALE = 0.156666633 ' / in.	CHECKED -	REVISED -	
PLOT DATE = 5/12/2025	DATE - 6/12/2025	REVISED -	

STATE OF ILLINOIS - DEPARTMENT OF TRANSPORTATION

SUMMARY OF QUANTITIES
L.W. BESINGER DRIVE

SCALE: N.T.S. | SHEET 13 OF 13 SHEETS | STA. TO STA.

F.A.U. RTE.	SECTION	COUNTY	TOTAL SHEETS	SHEET NO.
4006	22-00094-00-FP	KANE	105	17
		CONTRACT NO. 61L58		
		ILLINOIS	FED. AID PROJECT	

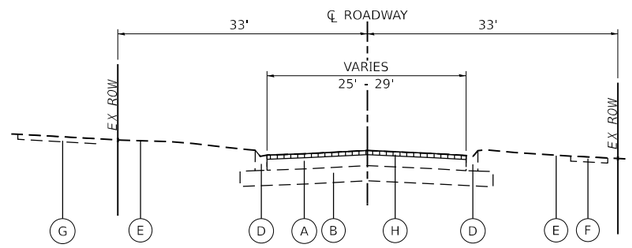

EXISTING TYPICAL SECTION

BESINGER DRIVE
STA. 100+87.00 - STA. 112+68.12

LEGEND

- HOT-MIX ASPHALT SURFACE REMOVAL, 2"
- PAVEMENT REMOVAL
- SIDEWALK REMOVAL
- COMBINATION CONCRETE CURB AND GUTTER REMOVAL
- SHOULDER REMOVAL (PAID AS EARTH EXCAVATION)

EXISTING LEGEND

- (A) EXISTING HOT-MIX ASPHALT PAVEMENT, VARIES, ~7"
- (B) EXISTING SUBBASE GRANULAR MATERIAL, VARIES, ~11" (PAID AS EARTH EXCAVATION)
- (C) EXISTING AGGREGATE SHOULDERS (PAID AS EARTH EXCAVATION)
- (D) EXISITNG COMBINATION CONCRETE CURB AND GUTTER
- (E) EXISTING GROUND
- (F) EXISTING SIDEWALK
- (G) EXISTING HOT-MIX ASPHALT MULTI-USE PATH
- (H) HOT-MIX ASPHALT SURFACE REMOVAL, 2"

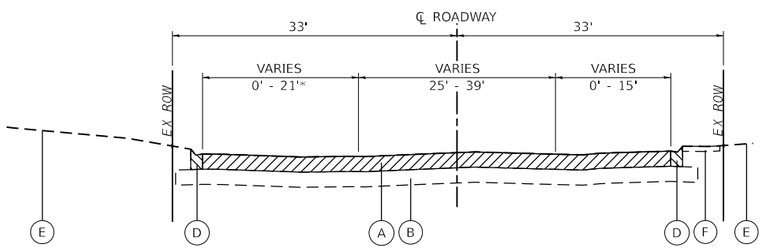

EXISTING TYPICAL SECTION

BESINGER DRIVE
STA. 112+68.12 - STA. 117+20.50
*STA. 113+99.70 - STA. 116+25.62

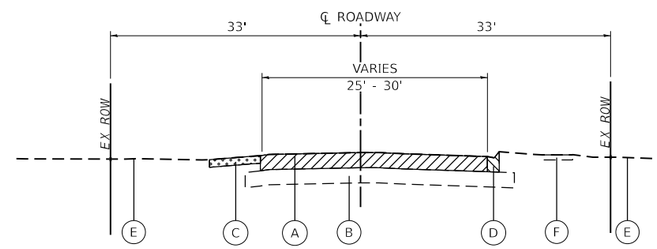

EXISTING TYPICAL SECTION

BESINGER DRIVE
STA. 117+20.50 - STA. 128+71.87

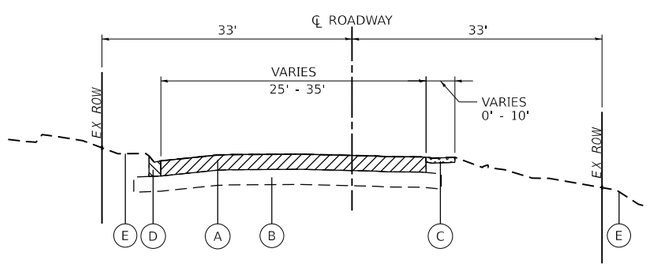

EXISTING TYPICAL SECTION

BESINGER DRIVE
STA. 128+71.87 - STA. 139+03.90

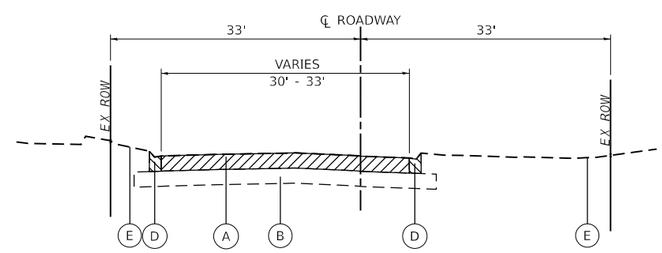

EXISTING TYPICAL SECTION

BESINGER DRIVE
STA. 139+03.90 - STA. 140+44.72

MODEL: typ-1 [Sheet]
FILE NAME: 201569-sht-typ.dgn

HRGreen.com
Illinois Professional Design Firm # 184-001322

USER NAME = jhorwit	DESIGNED -	REVISED -	
	DRAWN - BJB	REVISED -	
PLOT SCALE = 0.16666633 ' / in.	CHECKED -	REVISED -	
PLOT DATE = 6/12/2025	DATE - 6/12/2025	REVISED -	

STATE OF ILLINOIS - DEPARTMENT OF TRANSPORTATION

TYPICAL SECTIONS
L.W. BESINGER DRIVE

SCALE: N.T.S. | SHEET 1 OF 2 SHEETS | STA. | TO STA.

F.A.U. RTE.	SECTION	COUNTY	TOTAL SHEETS	SHEET NO.
4006	22-00094-00-FP	KANE	105	18
		CONTRACT NO. 61L58		
		ILLINOIS	FED. AID PROJECT	

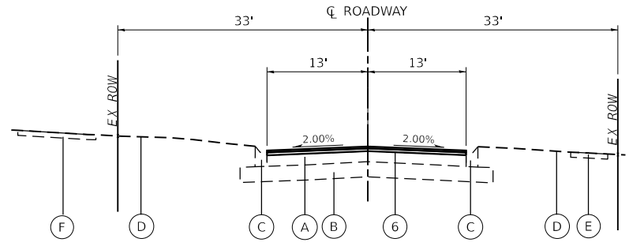

PROPOSED TYPICAL SECTION

BESINGER DRIVE
STA. 100+87.00 - STA. 112+68.12
THE LONGITUDINAL JOINT SEALANT SHALL BE PLACED ON THE
POLYMERIZED HOT-MIX ASPHALT BINDER COURSE, IL-4.75, N50

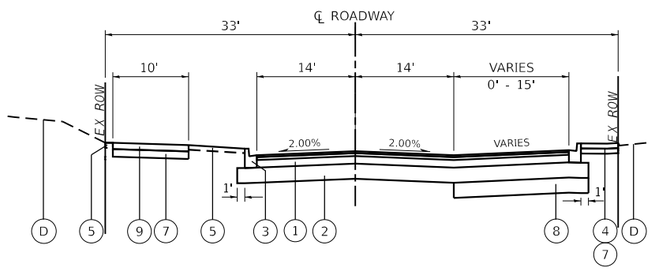

PROPOSED TYPICAL SECTION

BESINGER DRIVE
STA. 112+68.12 - STA. 117+20.50

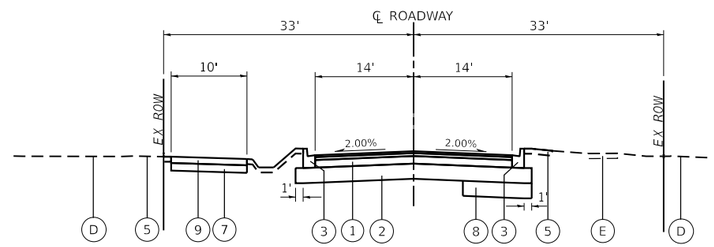

PROPOSED TYPICAL SECTION

BESINGER DRIVE
STA. 117+20.50 - STA. 128+71.87

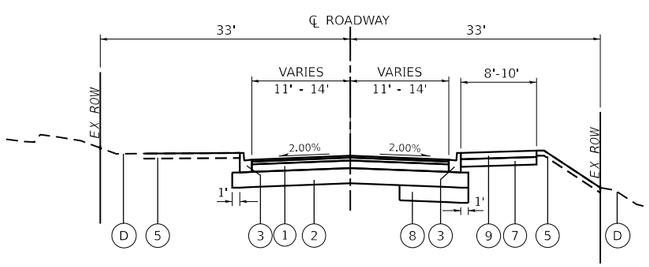

PROPOSED TYPICAL SECTION

BESINGER DRIVE
STA. 128+71.87 - STA. 139+03.90

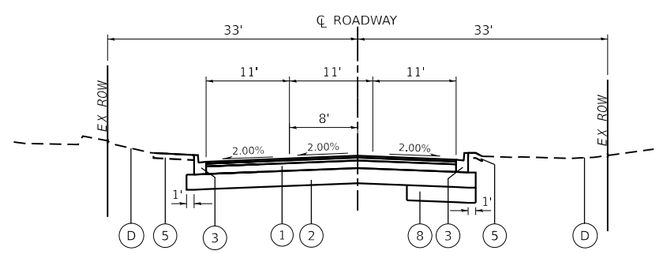

PROPOSED TYPICAL SECTION

BESINGER DRIVE
STA. 139+03.90 - STA. 140+44.72

FOR HOT-MIX ASPHALT PAVEMENT (FULL-DEPTH), THE LONGITUDINAL JOINT SEALANT SHALL BE PLACED BEFORE AND AFTER THE TOP LIFT OF HOT-MIX ASPHALT BINDER COURSE, IL-19.0, N50

EXISTING LEGEND

- (A) EXISTING PAVEMENT, ~7"
- (B) EXISTING SUBBASE GRANULAR MATERIAL, VARIES, ~11"
- (C) EXISTING COMBINATION CURB AND GUTTER
- (D) EXISTING GROUND
- (E) EXISTING SIDEWALK
- (F) EXISTING HOT-MIX ASPHALT MULTI-USE PATH

PROPOSED LEGEND

- (1) HOT-MIX ASPHALT PAVEMENT (FULL-DEPTH), 9 1/2"
- (2) AGGREGATE SUBGRADE IMPROVEMENT, 12" (SQ YD)
- (3) COMBINATION CONCRETE CURB AND GUTTER, TYPE B-6.12
- (4) PORTLAND CEMENT CONCRETE SIDEWALK, 5"
- (5) TOPSOIL FURNISH AND PLACE, 4"
  SODDING, SALT TOLERANT
- (6) HOT-MIX ASPHALT SURFACE COURSE, IL-9.5, MIX "D", N50; 1-1/2"
  POLYMERIZED HOT-MIX ASPHALT BINDER COURSE, IL-4.75, N50; 3/4"
- (7) SUBBASE GRANULAR MATERIAL, TYPE B 6"
- (8) AGGREGATE SUBGRADE IMPROVEMENT (CU YD)
  (EXACT LOCATION TO BE DETERMINED IN THE FIELD BY THE ENGINEER)
- (9) HOT-MIX ASPHALT MULTI-USE PATH
  HOT-MIX ASPHALT SURFACE COURSE, IL-9.5, MIX "D", N50; 1-1/2"
  HMA BINDER COURSE, IL-19.0, N50; 2-1/4"

HOT-MIX ASPHALT MIXTURE REQUIREMENTS		QMP
MIXTURE TYPE	AIR VOIDS @ NDES	
FULL DEPTH PAVEMENT: BESINGER DRIVE		
HOT-MIX ASPHALT PAVEMENT (FULL-DEPTH), 9 1/2"		
HOT-MIX ASPHALT SURFACE COURSE, IL-9.5, MIX "D", N50; 2"	4% @ 50 GYR.	LR 1030-2
HOT-MIX ASPHALT BINDER COURSE, IL-19.0, N50; 7-1/2"	4% @ 50 GYR.	LR 1030-2
PAVEMENT RESURFACING: BESINGER DRIVE		
HOT-MIX ASPHALT SURFACE COURSE, IL-9.5, MIX "D", N50; 1-1/2"	4% @ 50 GYR.	LR 1030-2
POLYMERIZED HOT-MIX ASPHALT BINDER COURSE, IL-4.75, N50; 3/4"	3.5% @ 50 GYR.	LR 1030-2
HOT-MIX ASPHALT MULTI-USE PATH		
HOT-MIX ASPHALT SURFACE COURSE, IL-9.5, MIX "D", N50; 1-1/2"	4% @ 50 GYR.	LR 1030-2
HOT-MIX ASPHALT BINDER COURSE, IL-19.0, N50; 2-1/4"	4% @ 50 GYR.	LR 1030-2
DRIVEWAYS		
HOT-MIX ASPHALT SURFACE COURSE, MIX "D", IL-9.5, N50; 2"	4% @ 50 GYR.	LR 1030-2
HOT-MIX ASPHALT BASE COURSE (HMA BINDER IL-19mm); CE-8", PE-6"	4% @ 50 GYR.	LR 1030-2
PATCHING		
CLASS D PATCHES (HMA BINDER IL-19.0)	4% @ 70 GYR.	LR 1030-2
TEMPORARY PAVEMENT		
HOT-MIX ASPHALT SURFACE COURSE, MIX "D", IL-9.5, N50; 1-1/2"	4% @ 50 GYR.	LR 1030-2
HOT-MIX ASPHALT BINDER COURSE, IL-19.0, N50; 8"	4% @ 50 GYR.	LR 1030-2
TEMPORARY PAVEMENT (VARIABLE DEPTH)		
HOT-MIX ASPHALT SURFACE COURSE, MIX "D", IL-9.5, N50; (VARIABLE DEPTH)	4% @ 50 GYR.	LR 1030-2
QMP DESIGNATION: QUALITY CONTROL / QUALITY ASSURANCE PER LR 1030-2		

THE UNIT WEIGHT USED TO CALCULATE ALL HOT-MIX ASPHALT SURFACE MIXTURES IS 112 LBS/SQ YD/IN.

THE "AC TYPE" FOR POLYMERIZED HMA MIXES SHALL BE "SBS/SBR PG 76 - 22" AND FOR NON-POLYMERIZED HMA THE "AC TYPE" SHALL BE "PG 64 - 22" UNLESS MODIFIED BY RECLAIMED MATERIALS SPECIFICATIONS.

MODEL: typ-2 [Sheet]
FILE NAME: 201569-sht-typ.dgn

HRGreen.com
Illinois Professional Design Firm # 184-001322

USER NAME = jhorwit	DESIGNED -	REVISED -	
	DRAWN - BJB	REVISED -	
PLOT SCALE = 0.16666633 ' / in.	CHECKED -	REVISED -	
PLOT DATE = 6/12/2025	DATE - 6/12/2025	REVISED -	

STATE OF ILLINOIS - DEPARTMENT OF TRANSPORTATION

TYPICAL SECTIONS
L.W. BESINGER DRIVE

SCALE: N.T.S. | SHEET 2 OF 2 SHEETS | STA. | TO STA.

F.A.U. RTE.	SECTION	COUNTY	TOTAL SHEETS	SHEET NO.
4006	22-00094-00-FP	KANE	105	19
		CONTRACT NO. 61L58		
		ILLINOIS	FED. AID PROJECT	

BESINGER	STAGE 1 (CU YD)				STAGE 2 (CU YD)				EARTHWORK BALANCE WASTE (+) OR SHORTAGE (-) WITH 15% SHRINKAGE	
STATION	REMOVAL AND DISPOSAL OF UNSUITABLE MATERIAL	EARTH EXCAVATION	EMBANKMENT	AGGREGATE SUBGRADE IMPROVEMENT	REMOVAL AND DISPOSAL OF UNSUITABLE MATERIAL	EARTH EXCAVATION	EMBANKMENT	AGGREGATE SUBGRADE IMPROVEMENT	**STAGE 1**	**STAGE 2**
112+68.50									0.0	0.0
113+00.00	0.9	30.7	3.4	0.0	5.8	42.5	0.2	0.0	22.7	35.9
113+50.00	0.0	63.7	0.0	0.0	9.2	60.0	1.0	0.0	54.1	50.0
114+00.00	0.0	59.4	0.0	0.0	7.8	47.7	3.0	0.0	50.5	37.5
114+50.00	0.0	59.1	0.0	0.0	3.2	39.0	5.9	0.0	50.2	27.2
115+00.00	0.0	66.2	0.0	0.0	0.0	36.9	6.0	0.0	56.2	25.4
115+50.00	0.0	69.1	0.1	0.0	0.0	37.7	5.1	0.0	58.7	27.0
116+00.00	0.0	65.7	0.0	0.0	0.0	39.9	5.0	0.0	55.8	28.9
116+50.00	0.0	62.7	0.0	0.0	2.3	43.1	4.7	0.0	53.3	32.0
117+00.00	0.0	64.1	0.0	0.0	5.0	47.4	4.4	0.0	54.4	35.9
117+50.00	0.0	65.8	0.0	0.0	6.0	52.3	3.0	0.0	55.9	41.4
117+71.74	0.0	44.6	0.0	0.0	3.1	24.0	0.7	0.0	37.9	19.7
118+00.00	0.0	69.6	0.0	0.0	4.3	32.2	0.7	0.0	59.1	26.6
118+50.00	1.4	79.4	0.8	0.0	8.2	56.3	1.5	0.0	66.7	46.4
119+00.00	1.4	45.7	0.8	0.0	8.3	54.7	2.1	0.0	38.0	44.4
119+50.00	0.0	43.6	0.2	0.0	7.6	53.8	2.9	0.0	36.8	42.8
119+76.45	0.0	33.1	0.1	0.0	3.6	29.3	1.6	0.0	28.0	23.3
120+00.00	0.5	30.0	0.3	0.0	3.0	28.2	1.0	0.0	25.2	22.9
120+44.45	0.9	43.8	0.6	0.0	5.5	59.2	0.8	0.0	36.6	49.5
120+50.00	0.0	5.5	0.0	0.0	0.7	7.9	0.0	0.0	4.7	6.7
121+00.00	0.0	50.0	0.1	0.0	6.0	74.3	0.3	0.0	42.4	62.9
121+50.00	0.7	52.4	0.1	0.0	6.3	78.9	0.1	0.0	44.4	67.0
122+00.00	0.7	53.9	0.3	0.0	6.7	81.5	0.0	0.0	45.5	69.3
122+50.00	0.1	53.1	0.5	0.0	7.0	80.6	0.0	0.0	44.5	68.5
123+00.00	0.1	53.0	0.2	0.0	7.1	76.2	1.0	0.0	44.9	63.8
123+17.25	0.0	21.9	0.0	0.0	2.3	25.7	0.6	0.0	18.6	21.2
123+50.00	0.7	43.6	0.0	0.0	4.0	51.2	0.5	0.0	37.1	43.0
123+95.62	1.0	58.9	0.0	0.0	5.6	71.9	1.2	0.0	50.0	59.9
124+00.00	0.0	6.0	0.0	0.0	0.6	6.7	0.2	0.0	5.1	5.5
124+50.00	2.5	69.9	0.0	0.0	6.7	76.0	2.0	0.0	59.4	62.6
125+00.00	8.1	78.7	0.0	0.0	6.9	83.6	1.2	0.0	66.9	69.9
125+50.00	9.1	83.4	0.1	0.0	6.8	89.0	0.7	0.0	70.8	74.9
125+84.60	2.4	55.1	0.1	0.0	4.5	58.9	0.5	0.0	46.8	49.5
126+00.00	0.2	22.1	0.0	0.0	1.9	25.6	0.1	0.0	18.8	21.6
126+50.00	1.4	57.8	0.0	0.0	6.2	78.5	0.7	0.0	49.1	66.0
126+75.79	0.4	30.8	0.0	0.0	3.2	37.8	0.6	0.0	26.2	31.5
127+00.00	0.5	28.6	0.0	0.0	3.0	34.1	0.7	0.0	24.3	28.3
127+50.00	1.6	49.2	0.0	0.0	6.6	60.5	3.2	0.0	41.8	48.3
128+00.00	2.3	46.5	0.4	0.0	7.2	51.5	4.8	0.0	39.1	39.0
128+50.00	3.3	43.2	0.7	0.0	8.2	55.5	2.8	0.0	36.0	44.4
129+00.00	1.6	65.0	0.3	0.0	4.5	63.2	0.4	0.0	55.0	53.3
129+06.06	0.0	10.7	0.0	0.0	0.0	8.0	0.0	0.0	9.1	6.8
129+06.60	0.0	1.0	0.0	0.0	0.0	0.7	0.0	0.0	0.8	0.6
129+50.00	0.9	61.0	2.3	0.0	0.3	51.3	0.0	0.0	49.6	43.6
130+00.00	1.7	52.7	4.4	0.0	1.5	50.7	0.0	0.0	40.4	43.1
130+50.00	1.4	56.6	2.7	0.0	1.2	64.8	0.0	0.0	45.4	55.1
130+98.27	1.6	59.5	1.0	0.0	0.0	79.3	0.0	0.0	49.6	67.4
131+00.00	0.1	2.2	0.0	0.0	0.0	2.9	0.0	0.0	1.9	2.5
131+50.00	2.7	63.5	0.7	0.0	0.0	80.8	0.0	0.0	53.3	68.7

MODEL: SCH-1 [Sheet]
FILE NAME: \\hrgreen.com\hrg\Data\2020\201569\CAD\Sheets\201569-sht-sch.dgn

HRGreen.com
Illinois Professional Design Firm
184-001322

USER NAME = jhorwit	DESIGNED -	REVISED -	
	DRAWN - JCH	REVISED -	
PLOT SCALE = 0.16666633 ' / in.	CHECKED -	REVISED -	
PLOT DATE = 6/12/2025	DATE - 6/12/2025	REVISED -	

STATE OF ILLINOIS - DEPARTMENT OF TRANSPORTATION

SCHEDULE OF QUANTITIES
L.W. BESINGER DRIVE

SCALE: N.T.S. | SHEET 1 OF 2 SHEETS | STA. TO STA.

F.A.U. RTE.	SECTION	COUNTY	TOTAL SHEETS	SHEET NO.
4006	22-00094-00-FP	KANE	105	20

CONTRACT NO. 61L58

ILLINOIS FED. AID PROJECT

BESINGER	STAGE 1 (CU YD)				STAGE 2 (CU YD)				EARTHWORK BALANCE WASTE () OR SHORTAGE (-) WITH 15% SHRINKAGE	
STATION	REMOVAL AND DISPOSAL OF UNSUITABLE MATERIAL	EARTH EXCAVATION	EMBANKMENT	AGGREGATE SUBGRADE IMPROVEMENT	REMOVAL AND DISPOSAL OF UNSUITABLE MATERIAL	EARTH EXCAVATION	EMBANKMENT	AGGREGATE SUBGRADE IMPROVEMENT	**STAGE 1**	**STAGE 2**
132+00.00	5.7	66.2	0.5	0.0	1.8	73.4	0.0	0.0	55.8	62.4
132+50.00	9.1	77.8	0.0	0.0	4.3	79.5	0.1	0.0	66.2	67.5
133+00.00	12.4	76.9	5.5	0.0	4.9	89.4	0.2	0.0	59.9	75.8
133+27.60	8.0	32.9	13.1	0.0	1.3	57.3	0.1	0.0	14.9	48.7
133+50.00	7.2	22.2	18.3	0.0	1.0	45.1	0.6	0.0	0.6	37.7
134+00.00	16.3	47.6	31.5	0.0	6.5	66.8	4.3	0.0	9.0	52.5
134+47.33	7.2	41.6	8.4	0.0	8.0	47.6	5.2	0.0	26.9	35.3
134+50.00	0.0	2.2	0.0	0.0	0.5	2.7	0.3	0.0	1.8	2.0
135+00.00	5.2	58.1	0.0	0.0	8.5	58.7	2.4	0.0	49.4	47.6
135+36.41	3.8	50.0	0.0	0.0	3.1	70.9	0.0	0.0	42.5	60.2
135+36.63	0.0	0.3	0.0	0.0	0.0	0.6	0.0	0.0	0.2	0.5
135+50.00	0.0	14.7	0.0	0.0	0.0	32.5	0.0	0.0	12.5	27.6
136+00.00	0.0	51.1	0.0	0.0	4.3	80.3	1.2	0.0	43.4	67.1
136+12.64	0.0	12.5	0.0	0.0	2.2	10.3	0.9	0.0	10.7	7.9
136+47.64	0.0	26.2	0.0	0.0	6.0	22.2	5.0	0.0	22.3	13.8
136+50.00	0.0	1.4	0.0	0.0	0.4	1.2	0.5	0.0	1.2	0.6
137+00.00	0.0	26.8	0.0	0.0	7.2	23.8	10.5	0.0	22.8	9.8
137+16.54	0.0	8.1	0.0	0.0	1.7	7.5	4.0	0.0	6.9	2.4
137+50.00	2.9	21.1	0.1	0.0	1.6	31.2	4.2	0.0	17.9	22.3
137+69.18	3.2	15.8	0.0	0.0	0.0	20.9	0.0	0.0	13.4	17.8
138+00.00	5.2	27.9	0.1	0.0	1.8	25.7	0.6	0.0	23.7	21.3
138+50.00	4.2	67.2	0.1	0.0	5.9	52.8	1.0	0.0	57.0	43.9
138+66.21	0.0	29.0	0.0	0.0	2.0	20.3	0.0	0.0	24.6	17.2
139+00.00	2.3	47.3	0.0	0.0	4.0	40.7	0.2	0.0	40.2	34.4
139+50.00	4.2	38.3	1.7	0.0	5.9	61.8	0.4	0.0	30.9	52.2
140+00.00	2.2	36.7	4.6	0.0	6.7	102.6	0.2	0.0	26.6	87.0
140+31.82	3.2	54.4	1.9	0.0	2.4	135.3	0.1	0.0	44.3	114.9
TOTALS	**152.4**	**3286.5**	**106.4**	**0.0**	**289.8**	**3653.1**	**113.2**	**0.0**	**2687.1**	**2992.0**

EARTHWORK SUMMARY

			CROSS SECTION BASED		
ITEM NO.	**CODE**	**DESCRIPTION**	**BESINGER**	**CONTINGENCY 10%**	**TOTAL**
1	**20200100**	**EARTH EXCAVATION**	**6,939.5**	**694.0**	**7,633.5**
2	**20201200**	**REMOVAL AND DISPOSAL OF UNSUITABLE MATERIAL**	**442.2**	**44.2**	**486.4**

MODEL: SCH-2 [Sheet]
FILE NAME: \\hrgreen.com\hrg\Data\2020\201569\CAD\Sheets\201569-sht-sch.dgn

HRGreen.com
Illinois Professional Design Firm
184-001322

USER NAME = jhorwit	DESIGNED -	REVISED -	
	DRAWN - JCH	REVISED -	
PLOT SCALE = 0.16666633 ' / In.	CHECKED -	REVISED -	
PLOT DATE = 6/12/2025	DATE - 6/12/2025	REVISED -	

STATE OF ILLINOIS - DEPARTMENT OF TRANSPORTATION

SCHEDULE OF QUANTITIES
L.W. BESINGER DRIVE

SCALE: N.T.S. | SHEET 2 OF 2 SHEETS | STA. TO STA.

F.A.U. RTE.	SECTION	COUNTY	TOTAL SHEETS	SHEET NO.
4006	22-00094-00-FP	KANE	105	21

CONTRACT NO. 61L58

ILLINOIS | FED. AID PROJECT

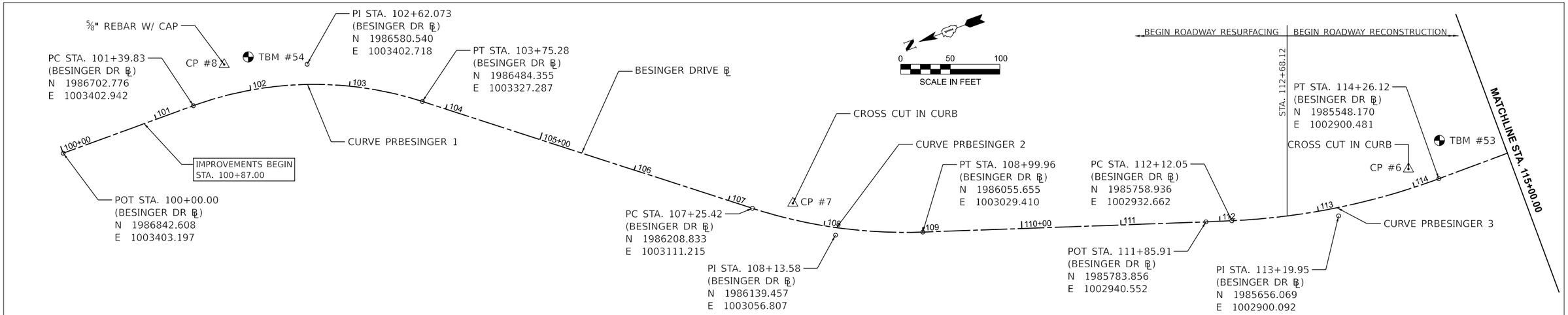

BENCHMARKS

TEMPORARY BENCHMARK #54
CROSS CUT IN NORTHEAST
CORNER OF CONCRETE
BUS STOP RETAINING
WALL.
NAVD 88 ELEV = 717.76

TEMPORARY BENCHMARK #53
CROSS CUT IN NORTHWEST
CORNER OF CONCRETE
ELECTRICAL CONTROL
BOX FOUNDATION.
NAVD 88 ELEV = 866.70

TEMPORARY BENCHMARK #52
CROSS CUT IN SOUTHWEST
CORNER OF CONCRETE
TRANSFORMER FOUNDATION.
NAVD 88 ELEV = 874.49

TEMPORARY BENCHMARK #51
CROSS CUT IN SOUTH SIDE
OF CONCRETE LIGHT POLE
BASE.
NAVD 88 ELEV = 881.08

CURVE DATA

PR CURVE PRBESINGER 1
PI STA = 102+62.07
Δ = 38°00'00" (RT)
D = 16°08'23"
R = 355.00'
T = 122.24'
L = 235.44'
E = 20.46'
PC STA = 101+39.83
PT STA = 103+75.28

PR CURVE PRBESINGER 2
PI STA = 108+13.58
Δ = 20°00'02" (LT)
D = 11°27'33"
R = 500.00'
T = 88.17'
L = 174.54'
E = 7.71'
PC STA = 107+25.42
PT STA = 108+99.96

PR CURVE PRBESINGER 3
PI STA = 113+19.95
Δ = 17°46'32" (LT)
D = 08°18'13"
R = 690.00'
T = 107.90'
L = 214.07'
E = 8.39'
PC STA = 112+12.05
PT STA = 114+26.12

PR CURVE PRBESINGER 4
PI STA = 117+11.21
Δ = 18°09'30" (LT)
D = 08°18'13"
R = 690.00'
T = 110.26'
L = 218.68'
E = 8.75'
PC STA = 116+00.95
PT STA = 118+19.63

PR CURVE PRBESINGER 5
PI STA = 122+05.47
Δ = 31°59'29" (LT)
D = 07°29'23"
R = 765.00'
T = 219.30'
L = 427.14'
E = 30.81'
PC STA = 119+86.17
PT STA = 124+13.31

PR CURVE PRBESINGER 6
PI STA = 132+49.65
Δ = 39°23'17" (LT)
D = 36°57'54"
R = 155.00'
T = 55.48'
L = 106.55'
E = 9.63'
PC STA = 131+94.17
PT STA = 133+00.72

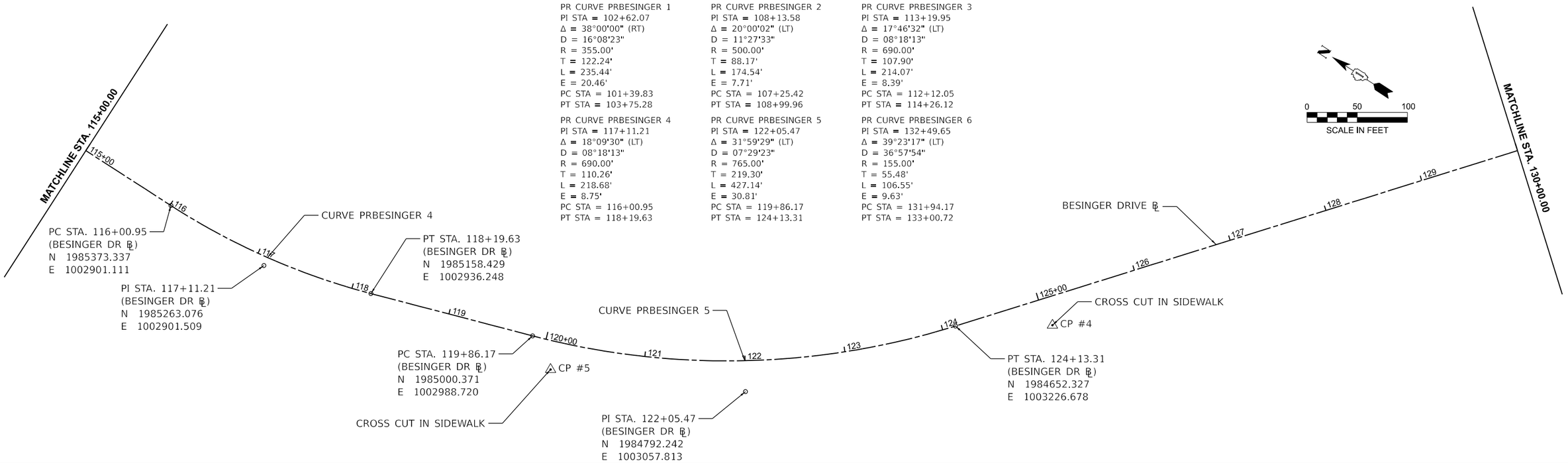

MODEL: align-1 [Sheet]
FILE NAME: 201569-sht-alb.dgn

HRGreen.com
Illinois Professional Design Firm
184-001322
HRGreen

USER NAME = jhorwit	DESIGNED -	REVISED -	
	DRAWN - BJB	REVISED -	
PLOT SCALE = 0.16666633 ' / in.	CHECKED -	REVISED -	
PLOT DATE = 6/12/2025	DATE - 6/12/2025	REVISED -	

STATE OF ILLINOIS - DEPARTMENT OF TRANSPORTATION

ALIGNMENT, TIES AND BENCHMARKS
L.W. BESINGER DRIVE

SCALE: 1"=50' | SHEET 1 OF 2 SHEETS | STA. 100+00.00 TO STA. 130+00.00

F.A.U. RTE.	SECTION	COUNTY	TOTAL SHEETS	SHEET NO.
4006	22-00094-00-FP	KANE	105	22
		CONTRACT NO. 61L58		
	ILLINOIS	FED. AID PROJECT		

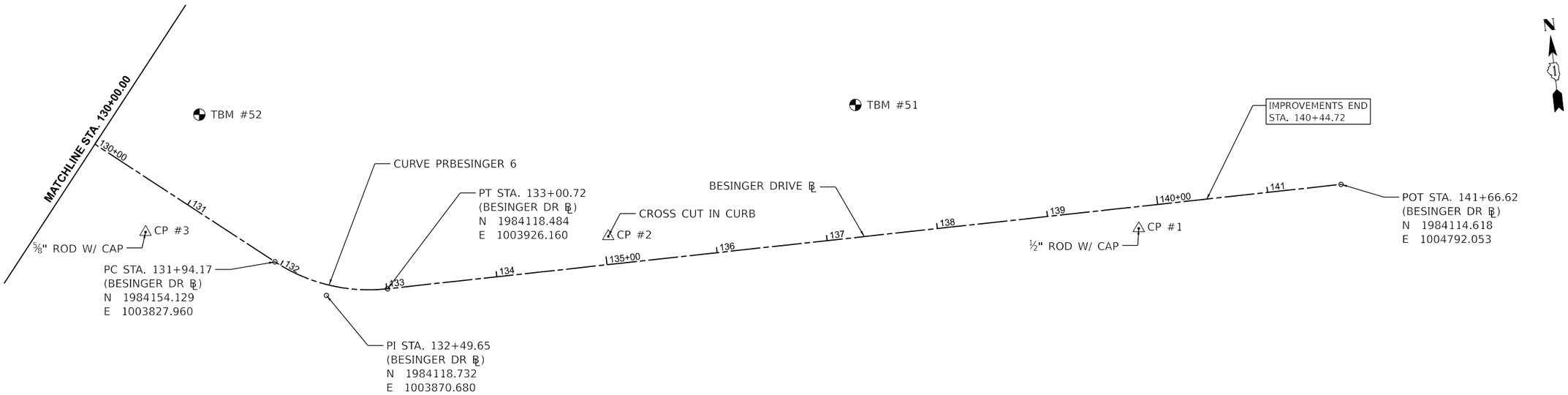

BENCHMARKS

TEMPORARY BENCHMARK #54
CROSS CUT IN NORTHEAST
CORNER OF CONCRETE
BUS STOP RETAINING
WALL.
NAVD 88 ELEV = 717.76

TEMPORARY BENCHMARK #53
CROSS CUT IN NORTHWEST
CORNER OF CONCRETE
ELECTRICAL CONTROL
BOX FOUNDATION.
NAVD 88 ELEV = 866.70

TEMPORARY BENCHMARK #52
CROSS CUT IN SOUTHWEST
CORNER OF CONCRETE
TRANSFORMER FOUNDATION.
NAVD 88 ELEV = 874.49

TEMPORARY BENCHMARK #51
CROSS CUT IN SOUTH SIDE
OF CONCRETE LIGHT POLE
BASE.
NAVD 88 ELEV = 881.08

CURVE DATA

PR CURVE PRBESINGER 1
PI STA = 102+62.07
Δ = 38°00'00" (RT)
D = 16°08'23"
R = 355.00'
T = 122.24'
L = 235.44'
E = 20.46'
PC STA = 101+39.83
PT STA = 103+75.28

PR CURVE PRBESINGER 2
PI STA = 108+13.58
Δ = 20°00'02" (LT)
D = 11°27'33"
R = 500.00'
T = 88.17'
L = 174.54'
E = 7.71'
PC STA = 107+25.42
PT STA = 108+99.96

PR CURVE PRBESINGER 3
PI STA = 113+19.95
Δ = 17°46'32" (LT)
D = 08°18'13"
R = 690.00'
T = 107.90'
L = 214.07'
E = 8.39'
PC STA = 112+12.05
PT STA = 114+26.12

PR CURVE PRBESINGER 4
PI STA = 117+11.21
Δ = 18°09'30" (LT)
D = 08°18'13"
R = 690.00'
T = 110.26'
L = 218.68'
E = 8.75'
PC STA = 116+00.95
PT STA = 118+19.63

PR CURVE PRBESINGER 5
PI STA = 122+05.47
Δ = 31°59'29" (LT)
D = 07°29'23"
R = 765.00'
T = 219.30'
L = 427.14'
E = 30.81'
PC STA = 119+86.17
PT STA = 124+13.31

PR CURVE PRBESINGER 6
PI STA = 132+49.65
Δ = 39°23'17" (LT)
D = 36°57'54"
R = 155.00'
T = 55.48'
L = 106.55'
E = 9.63'
PC STA = 131+94.17
PT STA = 133+00.72

MODEL: align-2 [Sheet]
FILE NAME: 201569-sht-alb.dgn

HRGreen.com
Illinois Professional Design Firm
184-001322
HRGreen

USER NAME = jhorwit	DESIGNED -	REVISED -	STATE OF ILLINOIS - DEPARTMENT OF TRANSPORTATION
	DRAWN - BJB	REVISED -	
PLOT SCALE = 0.16666633 ' / In.	CHECKED -	REVISED -	
PLOT DATE = 6/12/2025	DATE - 6/12/2025	REVISED -	

ALIGNMENT, TIES AND BENCHMARKS
L.W. BESINGER DRIVE

SCALE: 1"=50' | SHEET 2 OF 2 SHEETS | STA. 130+00.00 TO STA. 145+00.00

F.A.U. RTE.	SECTION	COUNTY	TOTAL SHEETS	SHEET NO.
4006	22-00094-00-FP	KANE	105	23
		CONTRACT NO. 61L58		
	ILLINOIS	FED. AID PROJECT		

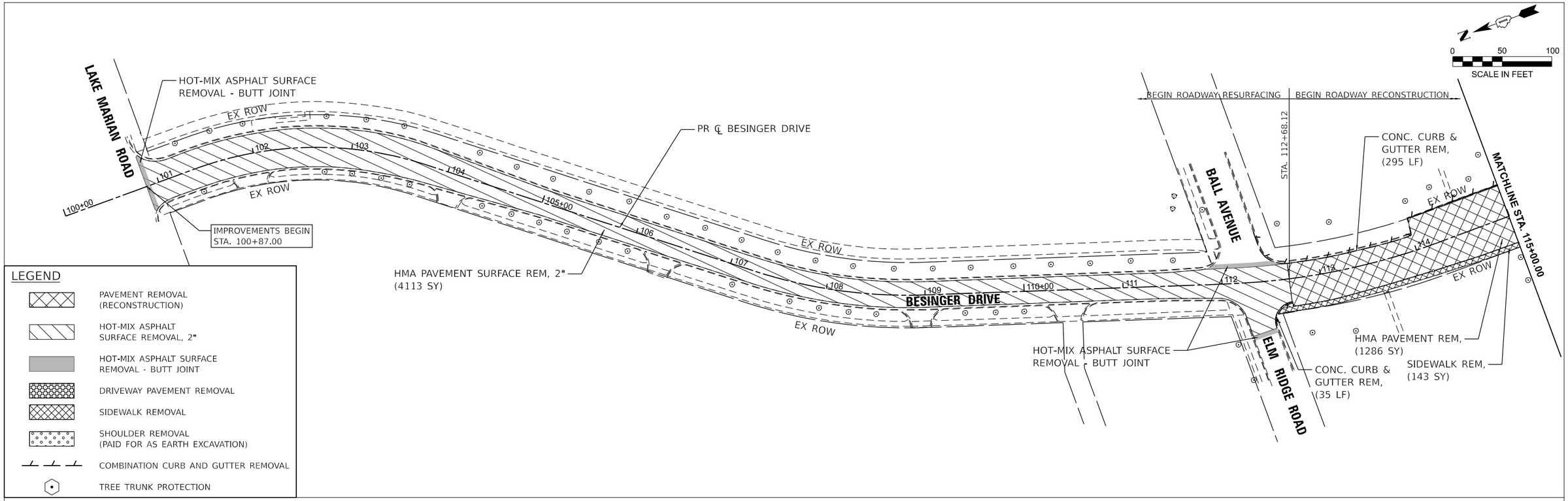

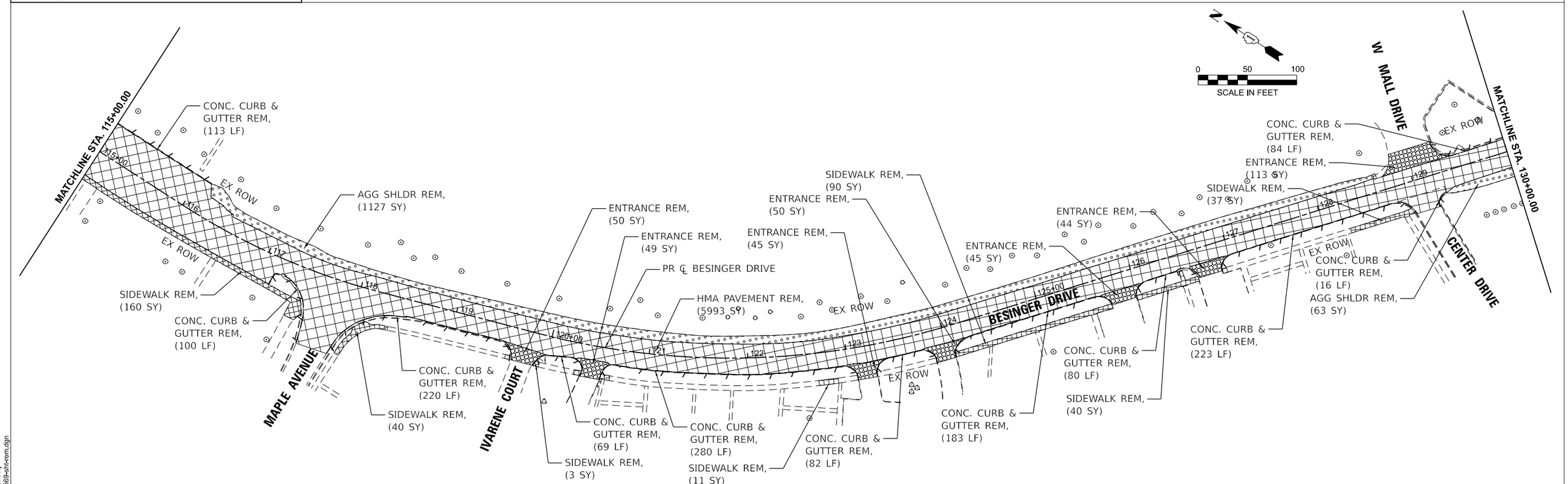

MODEL: rem-1 [Sheet]
FILE NAME: 201569-sht-rem.dgn

HRGreen.com
Illinois Professional Design Firm # 184-001322

USER NAME = jhorwit	DESIGNED -	REVISED -	
	DRAWN - BJB	REVISED -	
PLOT SCALE = 0.16666633 ' / in.	CHECKED -	REVISED -	
PLOT DATE = 6/12/2025	DATE - 6/12/2025	REVISED -	

STATE OF ILLINOIS - DEPARTMENT OF TRANSPORTATION

ROADWAY REMOVAL PLAN
L.W. BESINGER DRIVE

SCALE: 1"=50' | SHEET 1 OF 2 SHEETS | STA. 100+00.00 TO STA. 130+00.00

F.A.U. RTE.	SECTION	COUNTY	TOTAL SHEETS	SHEET NO.
4006	22-00094-00-FP	KANE	105	24

CONTRACT NO. 61L58

ILLINOIS | FED. AID PROJECT

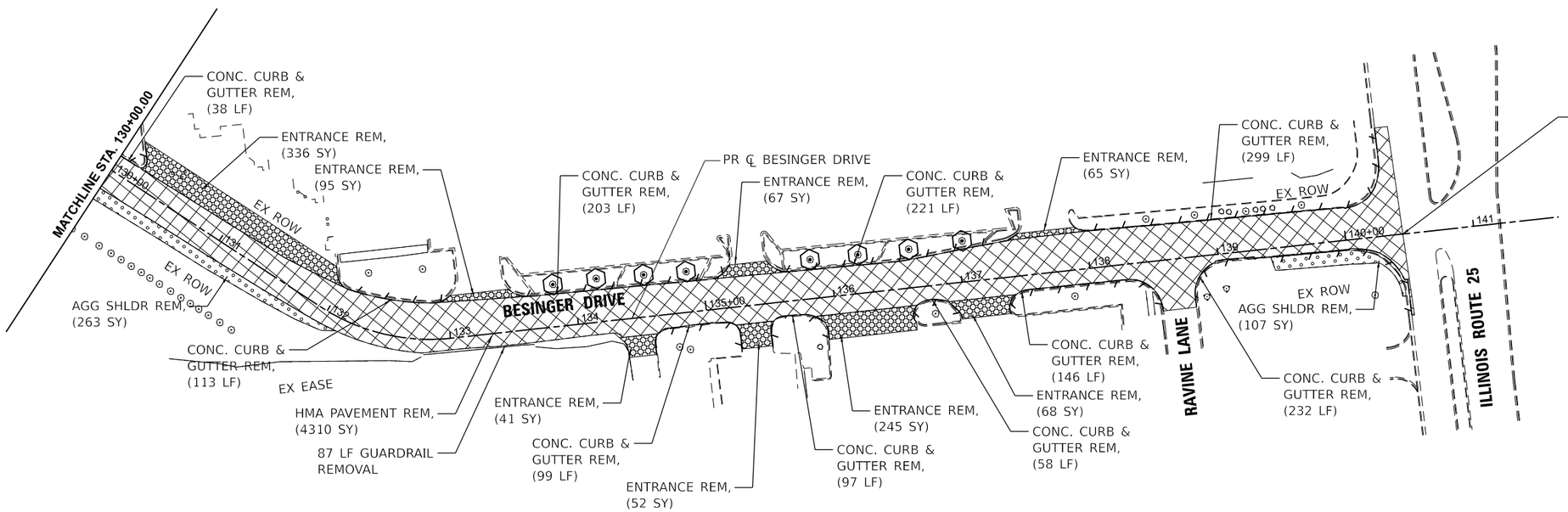

LEGEND

- PAVEMENT REMOVAL (RECONSTRUCTION)
- HOT-MIX ASPHALT SURFACE REMOVAL, 2"
- HOT-MIX ASPHALT SURFACE REMOVAL - BUTT JOINT
- DRIVEWAY PAVEMENT REMOVAL
- SIDEWALK REMOVAL
- SHOULDER REMOVAL (PAID FOR AS EARTH EXCAVATION)
- COMBINATION CURB AND GUTTER REMOVAL
- TREE TRUNK PROTECTION

MODEL: rem-2 [Sheet]
FILE NAME: 201569-sht-rem.dgn

HRGreen.com
Illinois Professional Design Firm # 184-001322
HRGreen

USER NAME = jhorwit	DESIGNED -	REVISED -	STATE OF ILLINOIS - DEPARTMENT OF TRANSPORTATION
	DRAWN - BJB	REVISED -	
PLOT SCALE = 0.16666633 ' / in.	CHECKED -	REVISED -	
PLOT DATE = 6/12/2025	DATE - 6/12/2025	REVISED -	

ROADWAY REMOVAL PLAN
L.W. BESINGER DRIVE

SCALE: 1"=50' | SHEET 2 OF 2 SHEETS | STA. 130+00.00 TO STA. 145+00.00

F.A.U. RTE.	SECTION	COUNTY	TOTAL SHEETS	SHEET NO.
4006	22-00094-00-FP	KANE	105	25
		CONTRACT NO. 61L58		
	ILLINOIS	FED. AID PROJECT		

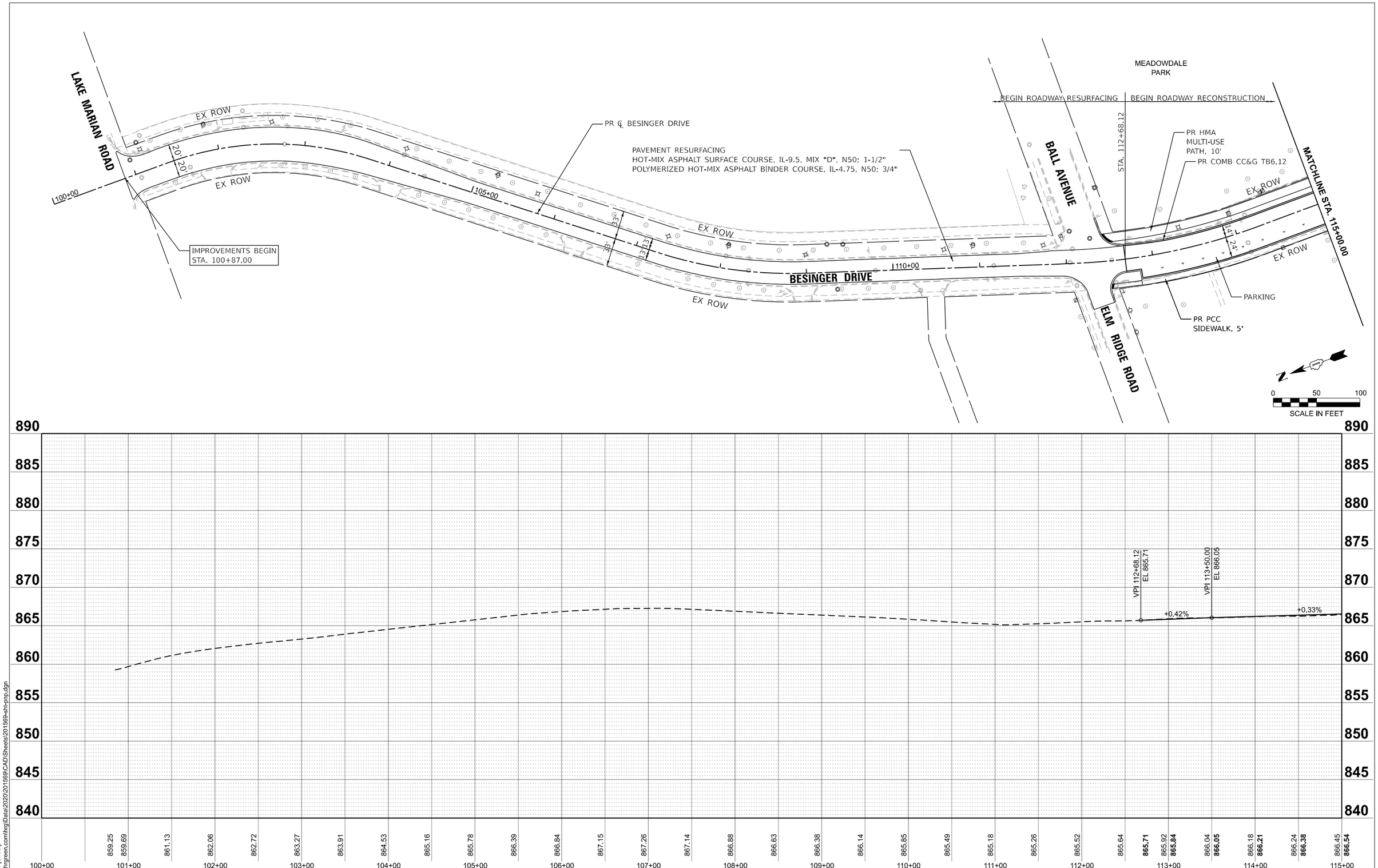

MODEL: pnp-1 [Sheet]
FILE NAME: \\hrgreen.com\hrg\Data\2020\201569\CAD\Sheets\201569-sht-pnp.dgn

HRGreen.com
Illinois Professional Design Firm
184-001322

USER NAME = jhorwit	DESIGNED -	REVISED -	
	DRAWN - BJB	REVISED -	
PLOT SCALE = 0.16666633 ' / in.	CHECKED -	REVISED -	
PLOT DATE = 6/12/2025	DATE - 6/12/2025	REVISED -	

STATE OF ILLINOIS - DEPARTMENT OF TRANSPORTATION

PLAN AND PROFILE
L.W. BESINGER DRIVE

SCALE: 1"=50' | SHEET 1 OF 3 SHEETS | STA. 100+00.00 TO STA. 115+00.00

F.A.U. RTE.	SECTION	COUNTY	TOTAL SHEETS	SHEET NO.
4006	22-00094-00-FP	KANE	105	26
		CONTRACT NO. 61L58		
		ILLINOIS	FED. AID PROJECT	

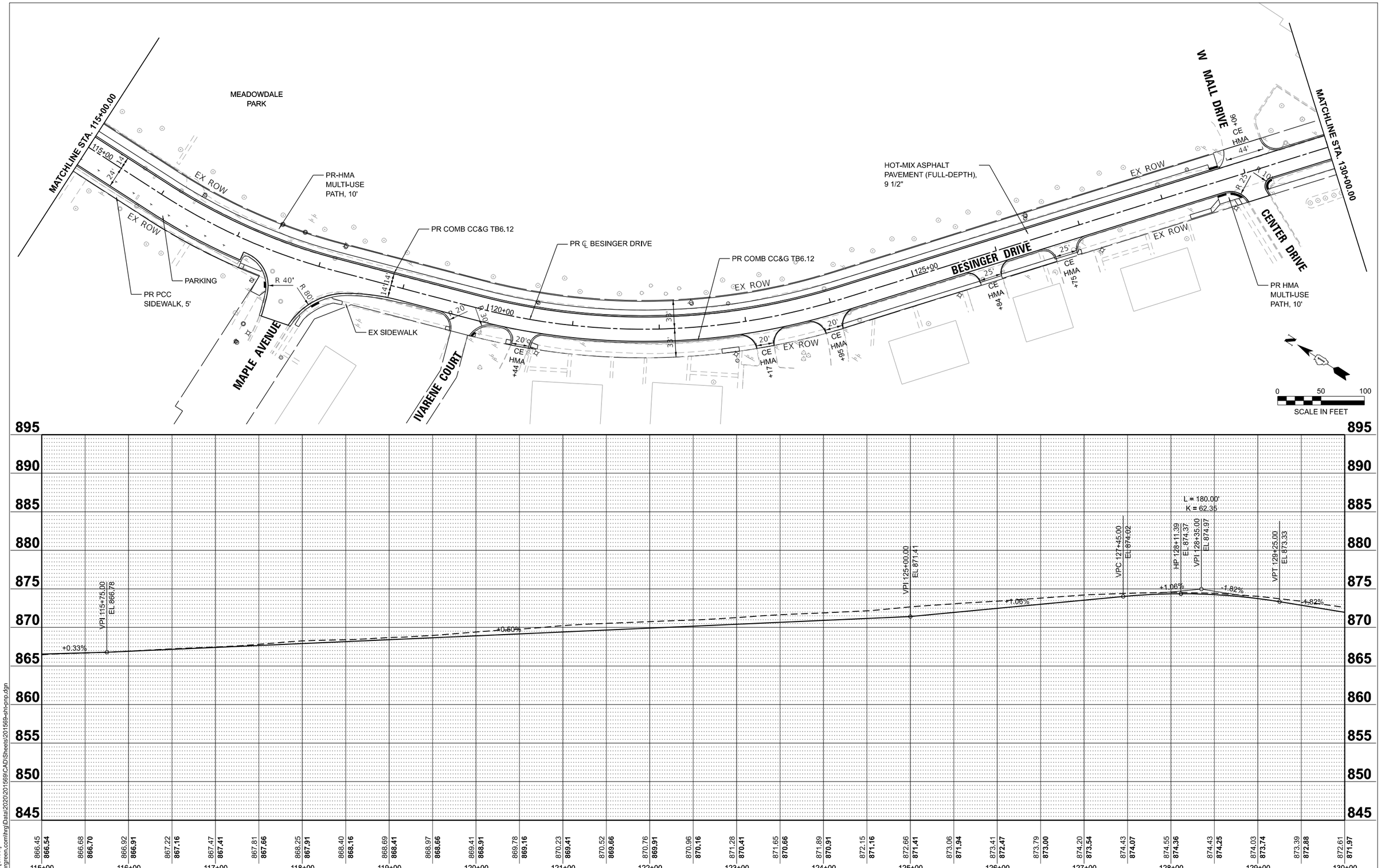

MODEL: pnp-2 [Sheet]
FILE NAME: \\hrgreen.com\hrg\Data\2020\201569\CAD\Sheets\201569-sht-pnp.dgn

HRGreen.com
Illinois Professional Design Firm # 184-001322

USER NAME = jhorwit	DESIGNED -	REVISED -	
	DRAWN - BJB	REVISED -	
PLOT SCALE = 0.16666633 ' / in.	CHECKED -	REVISED -	
PLOT DATE = 6/12/2025	DATE - 6/12/2025	REVISED -	

STATE OF ILLINOIS - DEPARTMENT OF TRANSPORTATION

PLAN AND PROFILE
L.W. BESINGER DRIVE

SCALE: 1"=50' | SHEET 2 OF 3 SHEETS | STA. 115+00.00 TO STA. 130+00.00

F.A.U. RTE.	SECTION	COUNTY	TOTAL SHEETS	SHEET NO.
4006	22-00094-00-FP	KANE	105	27

CONTRACT NO. 61L58

ILLINOIS | FED. AID PROJECT

MODEL: pnp-3 [Sheet]
FILE NAME: 201569-sh-pnp.dgn

HRGreen.
HRGreen.com
Illinois Professional Design Firm
184-001322

USER NAME = jhorwit	DESIGNED -	REVISED -	
	DRAWN - BJB	REVISED -	
PLOT SCALE = 0.16666633 ' / In.	CHECKED -	REVISED -	
PLOT DATE = 6/12/2025	DATE - 6/12/2025	REVISED -	

STATE OF ILLINOIS - DEPARTMENT OF TRANSPORTATION

PLAN AND PROFILE
L.W. BESINGER DRIVE

SCALE: 1"=50' | SHEET 3 OF 3 SHEETS | STA. 130+00.00 TO STA. 145+00.00

F.A.U. RTE.	SECTION	COUNTY	TOTAL SHEETS	SHEET NO.
4006	22-00094-00-FP	KANE	105	28
		CONTRACT NO. 61L58		
	ILLINOIS	FED. AID PROJECT		

SUGGESTED MAINTENANCE OF TRAFFIC GENERAL NOTES

1. THE TRAFFIC CONTROL PLAN SHALL SERVE AS A GUIDE FOR SAFE DIVERSION OF TRAFFIC DURING EXECUTION OF THIS CONTRACT. HOWEVER, THE CONTRACTOR MAY IMPROVE OR MODIFY THE TRAFFIC CONTROL PLANS TO MEET CONSTRUCTION NEEDS BUT NOT AT THE EXPENSE OF PUBLIC SAFETY OR CONVENIENCE. ANY CHANGES TO THE TRAFFIC CONTROL PLAN SHALL BE SUBMITTED TO THE ENGINEER FOR APPROVAL.
2. ALL OF THE TRAFFIC CONTROL DEVICES SHALL BE IN PLACE BEFORE CONSTRUCTION IS STARTED. ALL TEMPORARY PAVEMENT MARKINGS & TRAFFIC CONTROL DEVICES SHALL BE IN PLACE AT THE BEGINNING OF EACH STAGE, AND SHALL BE MAINTAINED FOR THE DURATION OF THAT STAGE UNLESS OTHERWISE DIRECTED BY THE ENGINEER.
3. A MINIMUM OF ONE (1) ELEVEN FOOT (11') LANE SHALL BE KEPT OPEN TO TRAFFIC AT ALL TIMES. A MINIMUM OF ONE (1) FIFTEEN FOOT (15') LANE WILL BE OPEN AT ALL TIMES ON ALL SIDE STREETS.
4. ALL PAVEMENT MARKINGS CONFLICTING WITH REVISED TRAFFIC PATTERNS SHALL BE REMOVED. PAVEMENT MARKING TAPE, TYPE IV SHALL BE USED ON THE FINAL WEARING SURFACE OR ON THE EXISTING PAVEMENT TO REMAIN WHEN THE TEMPORARY PAVEMENT MARKING CONFLICTS WITH THE PERMANENT PAVEMENT MARKING SUCH AS ON TAPERS OR LANE SHIFTS.
5. THE CONTRACTOR SHALL PROVIDE INFORMATION SIGNS ON TEMPORARY SUPPORTS FOR ALL COMMERCIAL DRIVEWAYS. THESE SIGNS SHALL BE WHITE ON GREEN IN ACCORDANCE WITH THE DISTRICT ONE DETAIL TC-26. THIS WORK WILL BE PAID FOR PER DISTRICT ONE DETAIL TC-26. THE CONTRACTOR SHALL BE REQUIRED TO MAINTAIN ACCESS TO ALL ENTRANCES, APPROACHES AND TEMPORARY ROADS WITHIN THE PROJECT LIMITS. THIS WORK WILL BE INCLUDED IN THE COST OF TEMPORARY ACCESS (PRIVATE ENTRANCE) OR TEMPORARY ACCESS (COMMERCIAL ENTRANCE).
6. TEMPORARY PAVEMENT (VARIABLE DEPTH) TO TRANSITION THE DIFFERENTIAL ELEVATIONS CAUSED BY STAGED CONSTRUCTION SHALL BE INSTALLED BETWEEN THE NEW CONSTRUCTION AND THE EXISTING PAVEMENT. ANY PAVEMENT DROP-OFFS GREATER THAN 3 INCHES IMMEDIATELY ADJACENT TO TRAFFIC SHALL NOT BE LEFT OVERNIGHT. PROVIDE TEMPORARY PAVEMENT (VARIABLE DEPTH) OR OTHER MITIGATING MEASURES APPROVED BY THE ENGINEER.
7. THE CONTRACTOR SHALL MAINTAIN TRAFFIC IN ACCORDANCE WITH THE PLANS, SPECIAL PROVISIONS, STATE STANDARDS AND AS DIRECTED BY THE ENGINEER.
8. THE CONTRACTOR SHALL INFORM THE ENGINEER OF ANY CHANGES IN STAGING AT LEAST TWO (2) WORKING DAYS IN ADVANCE.
9. TEMPORARY SIGNING, AS SHOWN, SHALL CONFORM TO THE APPLICABLE STANDARDS INCLUDED IN THE SPECIAL PROVISIONS AND CONTRACT PLANS OR AS DIRECTED BY THE ENGINEER.
10. ALL "ROAD CONSTRUCTION AHEAD" SIGNS SHALL BE EQUIPPED WITH MONO-DIRECTIONAL AMBER FLASHING LIGHTS.
11. ROAD NAME PLATES SHALL BE INSTALLED ON "ROAD CONSTRUCTION AHEAD" SIGNS AT INTERSECTIONS SHOWN ON THE PLANS.
12. EXISTING TRAFFIC CONTROL DEVICES WITHIN THE LIMITS OF CONSTRUCTION ARE TO BE PROTECTED FROM DAMAGE BY THE CONTRACTOR. ANY DAMAGED SIGNS CAUSED BY HIS WORK SHALL BE REPLACED BY THE CONTRACTOR.
13. TRAFFIC CONTROL DEPICTED ON THE MAINTENANCE OF TRAFFIC PLANS IS THE MINIMUM REQUIREMENT. OTHER WORK OR SIGNING MAY BE REQUIRED BY THE ENGINEER.
14. THE TYPE III BARRICADES ARE TO BE PLACED IN ACCORDANCE WITH STANDARD 701901 UNLESS AUTHORIZED BY THE ENGINEER TO USE AN ALTERNATE ARRANGEMENT.
15. TYPE I, TYPE II OR DRUM BARRICADES WITH TWO-WAY FLASHING LIGHTS SHALL BE REQUIRED AT ALL OPEN TRENCHES, EXCAVATIONS, OPEN OR EXPOSED SEWER STRUCTURES, TRANSVERSE PAVEMENT JOINTS, MATERIALS OR EQUIPMENT WITHIN THE RIGHT-OF-WAY (NUMBER AND SPACING DEPENDS ON THE CONDITIONS); AND AT LOCATIONS DESIGNATED BY THE ENGINEER OR LOCAL LAW ENFORCEMENT AGENCIES.
16. THE CONTRACTOR SHALL PROVIDE, INSTALL, MAINTAIN AND REMOVE ALL SIGNS AND SIGN SUPPORTS REQUIRED FOR TRAFFIC CONTROL AND PROTECTION. THIS WORK SHALL NOT BE PAID FOR SEPARATELY BUT SHALL BE INCLUDED IN THE CONTRACT UNIT PRICE PER LUMP SUM FOR "TRAFFIC CONTROL AND PROTECTION (SPECIAL)".
17. ARROW BOARDS WILL BE REQUIRED WHEN IMPLEMENTING ALL LANE CLOSURES.
18. THE CONTRACTOR SHALL REPLACE THE CENTER MEDIAN WITH TEMPORARY PAVEMENT AS SOON AS POSSIBLE TO PREVENT ANY WATER FROM ACCUMULATING IN THE MEDIAN. THE CONTRACTOR SHALL PUMP ANY WATER THAT ACCUMULATES IN THE MEDIAN BEFORE THE TEMPORARY PAVEMENT IS CONSTRUCTED. THIS WORK SHALL NOT BE PAID FOR SEPARATELY BUT SHALL BE INCLUDED IN THE CONTRACT UNIT PRICE PER SQUARE YARD FOR "TEMPORARY PAVEMENT".
19. ANY SAW CUTTING OF THE EXISTING PAVEMENT FOR STAGE CONSTRUCTION SHALL BE INCLUDED IN THE CONTRACT UNIT PRICE PER SQUARE YARD FOR "PAVEMENT REMOVAL".
20. TRAFFIC CONDITIONS, ACCIDENTS, AND OTHER UNFORESEEN EMERGENCY CONDITIONS MAY REQUIRE THE ENGINEER TO RESTRICT, MODIFY, OR REMOVE LANE CLOSURES OR CHANNELIZATION SHOWN IN THE PLANS. THE CONTRACTOR SHALL MAKE THE NECESSARY ADJUSTMENTS AS DIRECTED BY THE ENGINEER WITHOUT DELAY. THE CONTRACTOR SHALL RESPOND TO ANY REQUEST MADE BY THE ENGINEER FOR CORRECTION WITHIN TWO HOURS FROM THE TIME OF NOTIFICATION.
21. A DETECTABLE PEDESTRIAN CHANNELIZING BARRICADE WITH A "SIDEWALK CLOSED" SIGN AFFIXED, SHALL BE PLACED ON ALL SIDEWALKS CLOSED DUE TO CONSTRUCTION ACTIVITIES.
22. DROP-OFFS ADJACENT TO THE TRAVEL LANE SHALL BE KEPT TO A MINIMUM. PROTECTION OF THE DROP-OFF SHALL BE ACCORDING TO THE IDOT BUREAU OF SAFETY PROGRAMS AND ENGINEERING, SAFETY ENGINEERING POLICY MEMORANDUM 4-21. DROP-OFFS GREATER THAN OR EQUAL TO 12" AT LOCATIONS WHERE THE DROP-OFF IS LOCATED WITHIN 8 FT OF THE EDGE OF THE TRAVEL LANE SHALL BE BACKFILLED IN ACCORDANCE WITH TABLE 2, CONDITION II OF THE SAFETY 4-21 POLICY. THE CONTRACTOR SHALL BE RESPONSIBLE FOR ENSURING THAT THE DROP-OFF AREAS MEET THE OFFSET, HEIGHT, AND DURATION REQUIREMENTS TO USE BARRICADES AT THE END OF EACH WORKDAY. THIS MAY REQUIRE THE CONTRACTOR TO REPLACE OR PLACE SUFFICIENT MATERIAL IN THE EXCAVATION TO REDUCE THE DROP-OFF TO BE COMPLIANT WITH THE REQUIREMENTS FOR USE OF BARRICADES. NO ADDITIONAL COMPENSATION SHALL BE ALLOWED TO COMPLY WITH THIS REQUIREMENT.
23. ALL SCHOOL ZONE SIGNING SHALL BE MAINTAINED DURING ALL STAGES OF CONSTRUCTION.
24. ALL COMMERCIAL AND RESIDENTIAL DRIVEWAYS SHALL BE MAINTAINED DURING ALL STAGES OF CONSTRUCTION.

SUGGESTED MAINTENANCE OF TRAFFIC AND CONSTRUCTION STAGING SEQUENCE OF CONSTRUCTION

PRE-STAGE - SUGGESTED MAINTENANCE OF TRAFFIC

INSTALL ARTERIAL ROAD INFORMATION SIGNING PER DISTRICT 1 DETAIL TC-22 A MINIMUM OF TWO (2) WEEKS IN ADVANCE OF CONSTRUCTION.

UTILIZE HIGHWAY STANDARD 701701 FOR "URBAN LANE CLOSURE, MULTILANE INTERSECTION".

INSTALL TEMPORARY PAVEMENT MARKING DROPS ACCORDING TO HIGHWAY STANDARD 701601.

INSTALL ALL TEMPORARY PAVEMENT MARKING AND TEMPORARY TRAFFIC CONTROL DEVICES FOR STAGE 1 CONSTRUCTION, SHIFT TRAFFIC.

STAGE 1 - CONSTRUCTION BESINGER DRIVE

CONSTRUCT WESTERN LANE OF PAVEMENT OF BESINGER DRIVE SOUTH OF TAPER.

STAGE 1A - SUGGESTED MAINTENANCE OF TRAFFIC BESINGER DRIVE

ADJUST ADVANCED SIGNING ACCORDING TO THE PLANS FOR STAGE 1 CONSTRUCTION.

REMOVE ALL CONFLICTING RAISED REFLECTIVE PAVEMENT MARKERS WITHIN THE PROJECT LIMITS.

REMOVE ALL CONFLICTING EXISTING AND TEMPORARY PAVEMENT MARKINGS FROM STAGE 1 ALONG BESINGER DRIVE AND INSTALL TEMPORARY PAVEMENT MARKING AND TRAFFIC CONTROL FOR SOUTHBOUND LANE DROPS ACCORDING TO HIGHWAY STANDARD 701601.

REDUCE NORTH LEG OF ELM RIDGE RD INTERSECTION TO 2-11' NORTH AND SOUTH BOUND LANES.

STAGE 1A - CONSTRUCTION BESINGER DRIVE

CONSTRUCT WESTERN LANE OF PAVEMENT OF BESINGER DRIVE.

STAGE 2 - SUGGESTED MAINTENANCE OF TRAFFIC BESINGER DRIVE

ADJUST ADVANCED SIGNING ACCORDING TO THE PLANS FOR STAGE 2 CONSTRUCTION.

COVER OR REMOVE PERMANENT SIGNS AS NEEDED FOR STAGE 2 CONSTRUCTION.

REMOVE ALL CONFLICTING RAISED REFLECTIVE PAVEMENT MARKERS WITHIN THE PROJECT LIMITS.

REMOVE ALL CONFLICTING EXISTING AND TEMPORARY PAVEMENT MARKINGS FROM STAGE 1 ALONG BESINGER DRIVE AND UTILIZE HIGHWAY STANDARD 701701 FOR "URBAN LANE CLOSURE, MULTILANE INTERSECTION".

INSTALL ALL TEMPORARY PAVEMENT MARKING AND TEMPORARY TRAFFIC CONTROL DEVICES FOR STAGE 2 CONSTRUCTION.

STAGE 2 - CONSTRUCTION BESINGER DRIVE

CONSTRUCT EASTERN LANE OF PAVEMENT OF BESINGER DRIVE.

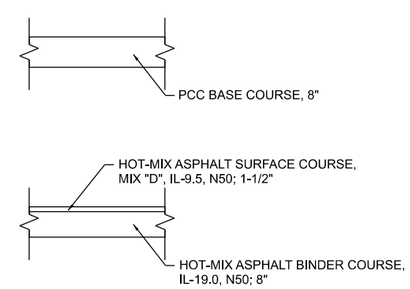

SUGGESTED MAINTENANCE OF TRAFFIC AND CONSTRUCTION STAGING TYPICAL SECTIONS

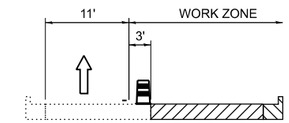

TYPICAL SECTION - STAGE 1
BESINGER DRIVE
STA. 114+29.79 TO STA. 140+44.72

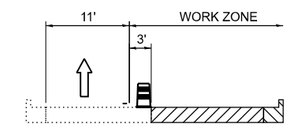

TYPICAL SECTION - STAGE 1A
BESINGER DRIVE
STA. 112+68.13 TO STA. 140+44.72

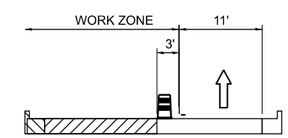

TYPICAL SECTION - STAGE 2
BESINGER DRIVE
STA. 112+68.13 TO STA. 140+44.72

MODEL: motgen01 [Sheet]
FILE NAME: \\hrgreen.com\hrg\Data\2020\201569\CAD\Sheets\201569-sht-motgen.dgn

HRGreen.com
Illinois Professional Design Firm # 184-001322

USER NAME = jhorwit	DESIGNED -	REVISED -	STATE OF ILLINOIS - DEPARTMENT OF TRANSPORTATION
	DRAWN - KRR	REVISED -	
PLOT SCALE = 0.16666633 ' / in.	CHECKED -	REVISED -	
PLOT DATE = 6/12/2025	DATE - 6/12/2025	REVISED -	

SUGGESTED MAINTENANCE OF TRAFFIC
L.W. BESINGER DRIVE

SCALE: | SHEET 1 OF 7 SHEETS | STA. | TO STA.

F.A.U. RTE.	SECTION	COUNTY	TOTAL SHEETS	SHEET NO.
4006	22-00094-00-FP	KANE	105	29
		CONTRACT NO. 61L58		
		ILLINOIS	FED. AID PROJECT	

NOTES:

FOR PAVEMENT MARKING DETAILS, SEE IDOT DISTRICT 1 DETAIL TC-13.

ALL STAGE 1 AND 1A PAVEMENT MARKINGS SHALL BE PAVEMENT MARKING TAPE TYPE IV, UNLESS OTHERWISE NOTED.

ALL STAGE 2 PAVEMENT MARKINGS SHALL BE PAVEMENT MARKING TAPE TYPE IV, UNLESS OTHERWISE NOTED.

* SIGN SHALL BE TAKEN DOWN WHEN WORKERS ARE NOT PRESENT.

** PLACE WORK ZONE SPEED LIMIT SIGNING 500' FROM WORK ZONE AND WITHIN 500' DOWNSTREAM OF ALL MAJOR INTERSECTIONS.

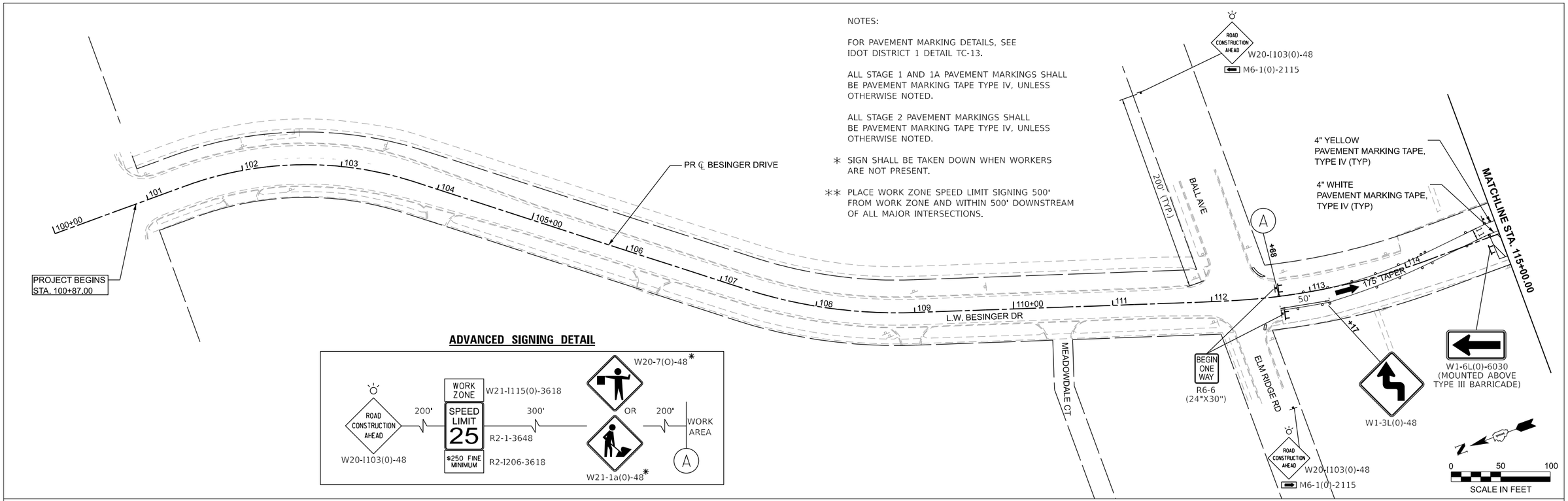

ADVANCED SIGNING DETAIL

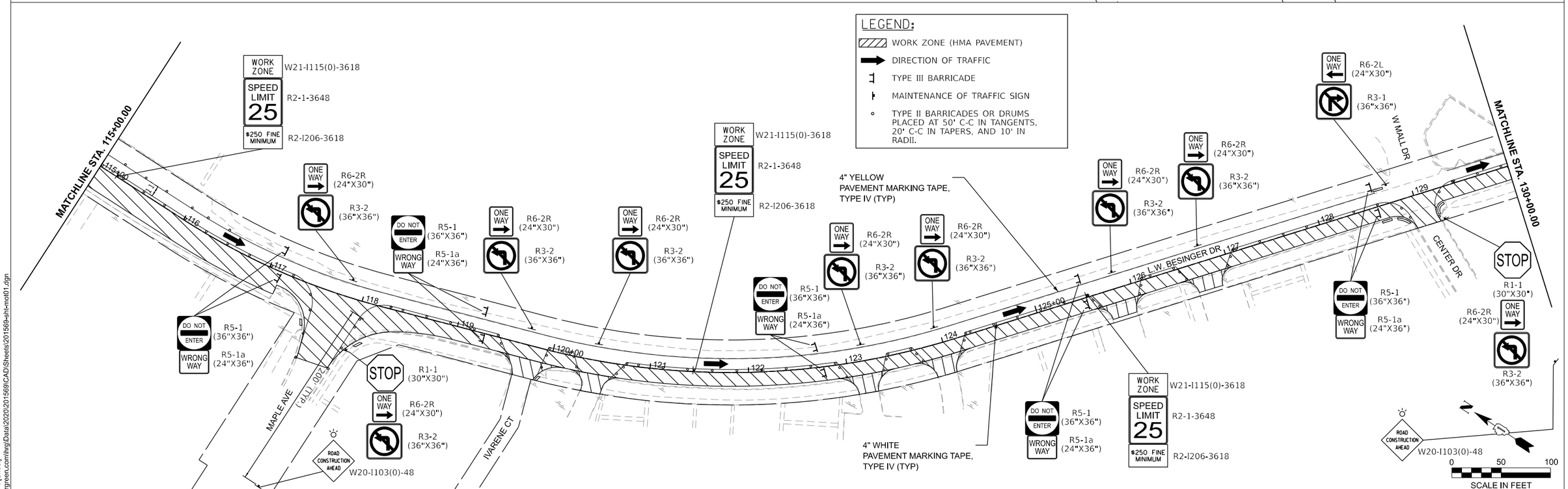

MODEL: mot01-1 [Sheet]
FILE NAME: \\hrgreen.com\hrg\Data\2020\201569\CAD\Sheets\201569-sht-mot01.dgn

HRGreen.com
Illinois Professional Design Firm # 184-001322

USER NAME = jhorwit	DESIGNED -	REVISED -	
	DRAWN - KRR	REVISED -	
PLOT SCALE = 0.16666633 ' / in.	CHECKED -	REVISED -	
PLOT DATE = 6/12/2025	DATE - 6/12/2025	REVISED -	

STATE OF ILLINOIS - DEPARTMENT OF TRANSPORTATION

SUGGESTED MAINTENANCE OF TRAFFIC - STAGE 1
L.W. BESINGER DRIVE

SCALE: 1"=50' | SHEET 2 OF 7 SHEETS | STA. 100+00.00 TO STA. 130+00.00

F.A.U. RTE.	SECTION	COUNTY	TOTAL SHEETS	SHEET NO.
4006	22-00094-00-FP	KANE	105	30
		CONTRACT NO. 61L58		
		ILLINOIS	FED. AID PROJECT	

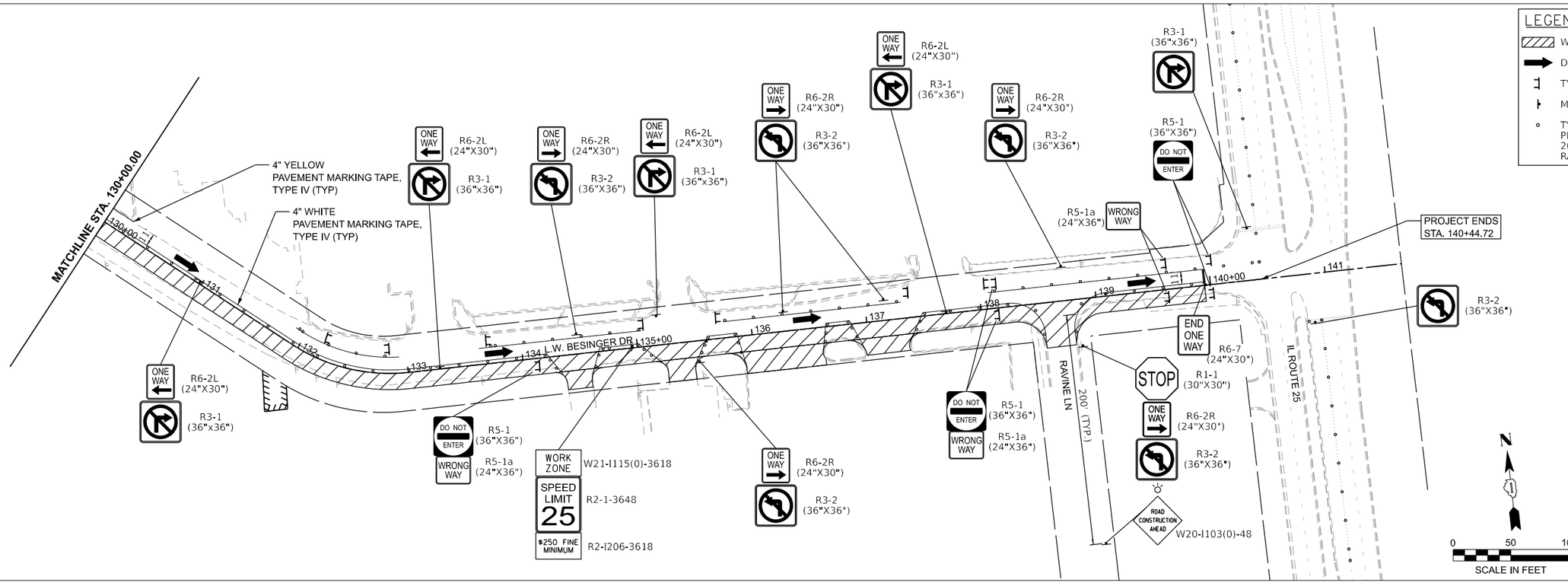

LEGEND:

- WORK ZONE (HMA PAVEMENT)
- DIRECTION OF TRAFFIC
- TYPE III BARRICADE
- MAINTENANCE OF TRAFFIC SIGN
- TYPE II BARRICADES OR DRUMS PLACED AT 50' C-C IN TANGENTS, 20' C-C IN TAPERS, AND 10' IN RADII.

FOLLOW IDOT HIGHWAY STANDARD 701701-10 FOR RIGHT LANE CLOSURE TO BESINGER DRIVE FROM ILLINOIS ROUTE 25 (KENNEDY DRIVE)

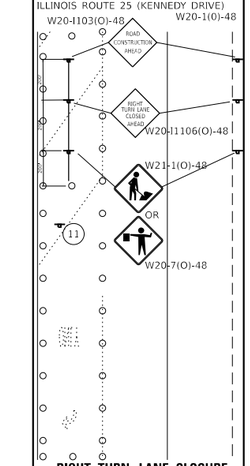

RIGHT TURN LANE CLOSURE
(NOT TO SCALE)

NOTES:

FOR PAVEMENT MARKING DETAILS, SEE IDOT DISTRICT 1 DETAIL TC-13.

ALL STAGE 1 AND 1A PAVEMENT MARKINGS SHALL BE PAVEMENT MARKING TAPE TYPE IV, UNLESS OTHERWISE NOTED.

ALL STAGE 2 PAVEMENT MARKINGS SHALL BE PAVEMENT MARKING TAPE TYPE IV, UNLESS OTHERWISE NOTED.

SIGN SHALL BE TAKEN DOWN WHEN WORKERS ARE NOT PRESENT.

PLACE WORK ZONE SPEED LIMIT SIGNING 500' FROM WORK ZONE AND WITHIN 500' DOWNSTREAM OF ALL MAJOR INTERSECTIONS.

MODEL: mot01-3 [Sheet]
FILE NAME: \\hrgreen.com\hrgData\2020\201569\CAD\Sheets\201569-sht-mot01.dgn

HRGreen.com
Illinois Professional Design Firm # 184-001322

USER NAME = jhorwit	DESIGNED -	REVISED -	STATE OF ILLINOIS - DEPARTMENT OF TRANSPORTATION
	DRAWN - KRR	REVISED -	
PLOT SCALE = 0.16666633 ' / in.	CHECKED -	REVISED -	
PLOT DATE = 6/12/2025	DATE - 6/12/2025	REVISED -	

SUGGESTED MAINTENANCE OF TRAFFIC - STAGE 1
L.W. BESINGER DRIVE

SCALE: 1"=50' | SHEET 3 OF 7 SHEETS | STA. 130+00.00 TO STA. 145+00.00

F.A.U. RTE.	SECTION	COUNTY	TOTAL SHEETS	SHEET NO.
4006	22-00094-00-FP	KANE	105	31
		CONTRACT NO. 61L58		
	ILLINOIS	FED. AID PROJECT		

NOTES:

FOR PAVEMENT MARKING DETAILS, SEE IDOT DISTRICT 1 DETAIL TC-13.

ALL STAGE 1 AND 1A PAVEMENT MARKINGS SHALL BE PAVEMENT MARKING TAPE TYPE IV, UNLESS OTHERWISE NOTED.

ALL STAGE 2 PAVEMENT MARKINGS SHALL BE PAVEMENT MARKING TAPE TYPE IV, UNLESS OTHERWISE NOTED.

* SIGN SHALL BE TAKEN DOWN WHEN WORKERS ARE NOT PRESENT.

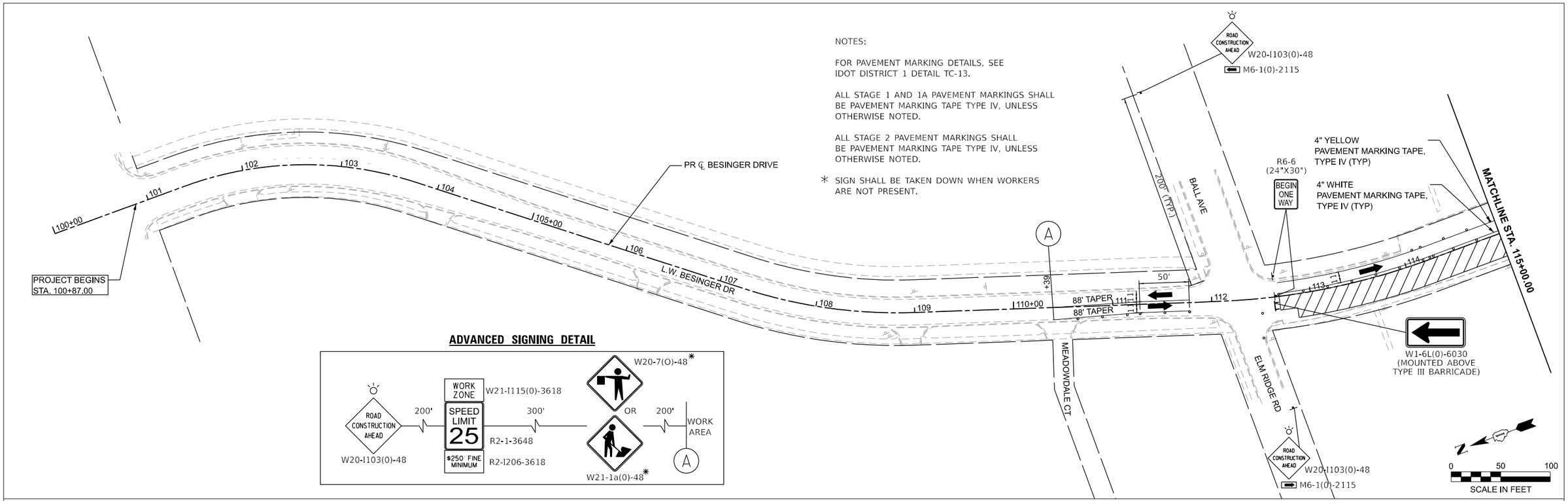

ADVANCED SIGNING DETAIL

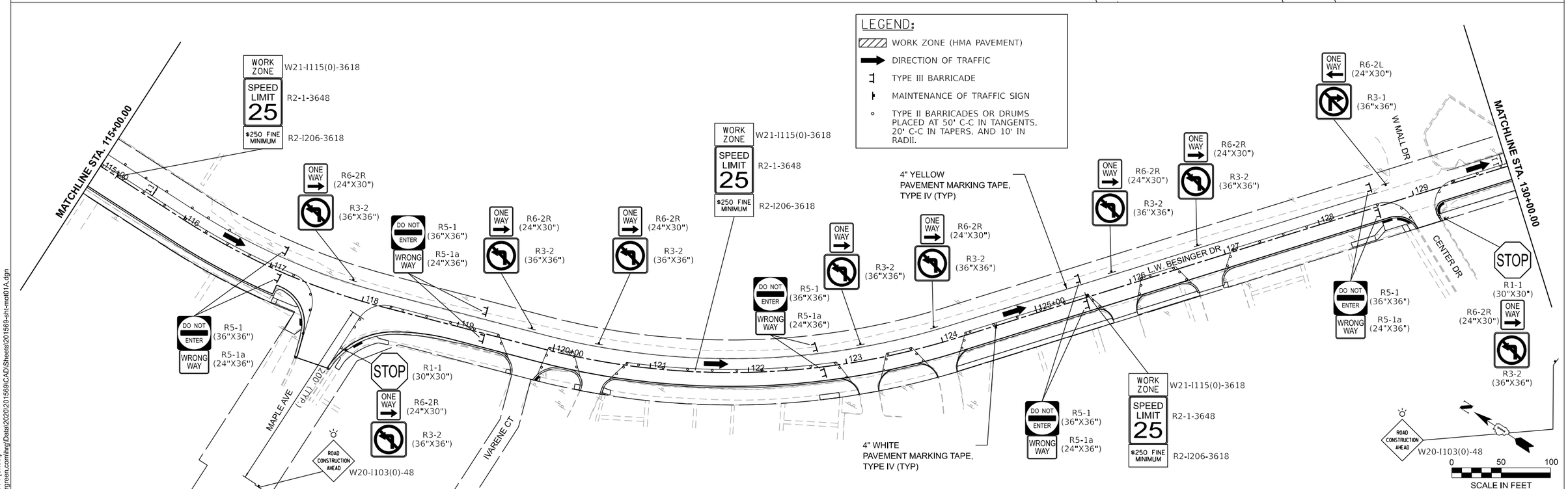

MODEL: mot01A-1 [Sheet]
FILE NAME: \\hrgreen.com\hrg\Data\2020\201569\CAD\Sheets\201569-sht-mot01A.dgn

HRGreen.com
Illinois Professional Design Firm # 184-001322

USER NAME = jhorwit	DESIGNED -	REVISED -	
	DRAWN - KRR	REVISED -	
PLOT SCALE = 0.16666633 ' / in.	CHECKED -	REVISED -	
PLOT DATE = 6/12/2025	DATE - 6/12/2025	REVISED -	

STATE OF ILLINOIS - DEPARTMENT OF TRANSPORTATION

SUGGESTED MAINTENANCE OF TRAFFIC - STAGE 1A
L.W. BESINGER DRIVE

SCALE: 1"=50' | SHEET 4 OF 7 SHEETS | STA. 100+00.00 TO STA. 130+00.00

F.A.U. RTE.	SECTION	COUNTY	TOTAL SHEETS	SHEET NO.
4006	22-00094-00-FP	KANE	105	32
		CONTRACT NO. 61L58		
		ILLINOIS	FED. AID PROJECT	

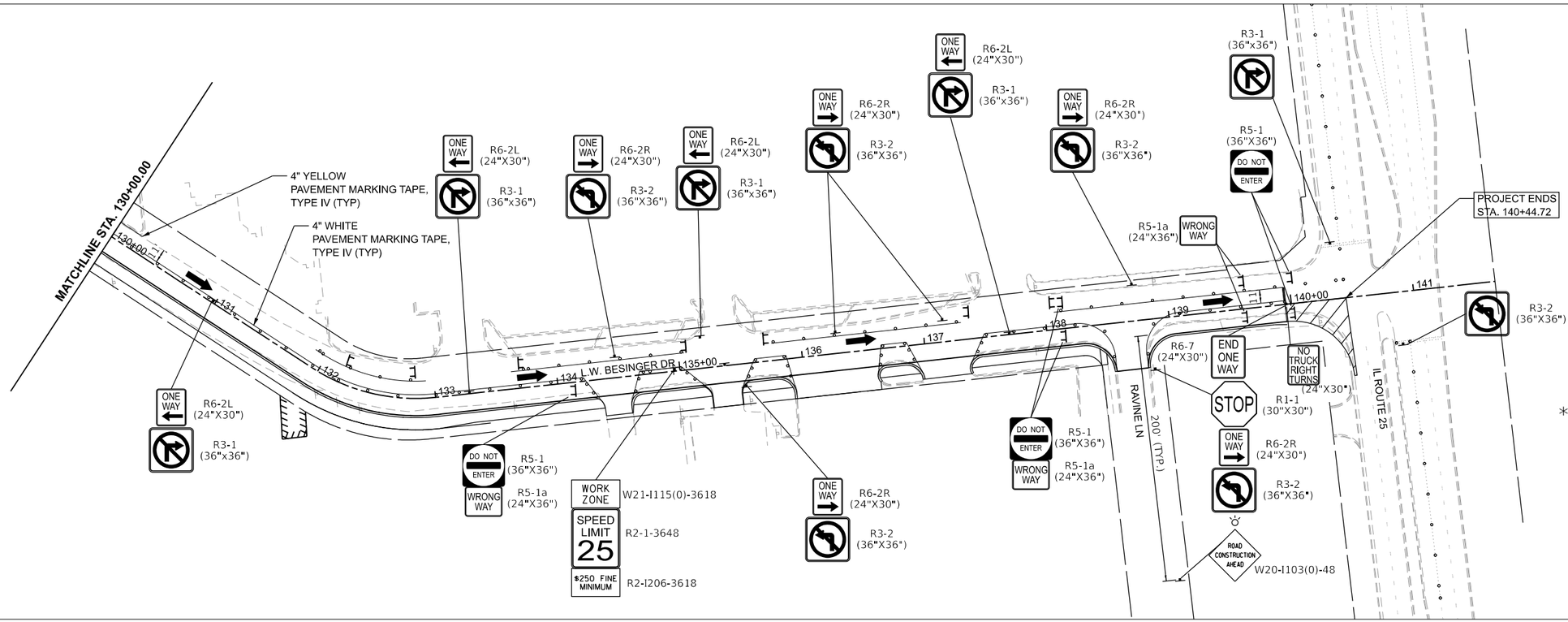

LEGEND:

- WORK ZONE (HMA PAVEMENT)
- DIRECTION OF TRAFFIC
- TYPE III BARRICADE
- MAINTENANCE OF TRAFFIC SIGN
- TYPE II BARRICADES OR DRUMS PLACED AT 50' C-C IN TANGENTS, 20' C-C IN TAPERS, AND 10' IN RADII.

NOTES:

FOR PAVEMENT MARKING DETAILS, SEE IDOT DISTRICT 1 DETAIL TC-13.

ALL STAGE 1 AND 1A PAVEMENT MARKINGS SHALL BE PAVEMENT MARKING TAPE TYPE IV, UNLESS OTHERWISE NOTED.

ALL STAGE 2 PAVEMENT MARKINGS SHALL BE PAVEMENT MARKING TAPE TYPE IV, UNLESS OTHERWISE NOTED.

* SIGN SHALL BE TAKEN DOWN WHEN WORKERS ARE NOT PRESENT.

MODEL: mot01A-3 [Sheet]
FILE NAME: \\hrgreen.com\hrgData\2020\201569\CAD\Sheets\201569-sht-mot01A.dgn

HRGreen.com
Illinois Professional Design Firm # 184-001322
HRGreen

USER NAME = jhorwit	DESIGNED -	REVISED -	STATE OF ILLINOIS - DEPARTMENT OF TRANSPORTATION
	DRAWN - KRR	REVISED -	
PLOT SCALE = 0.16666633 ' / in.	CHECKED -	REVISED -	
PLOT DATE = 6/12/2025	DATE - 6/12/2025	REVISED -	

SUGGESTED MAINTENANCE OF TRAFFIC - STAGE 1A
L.W. BESINGER DRIVE

SCALE: 1"=50' | SHEET 5 OF 7 SHEETS | STA. 130+00.00 TO STA. 145+00.00

F.A.U. RTE.	SECTION	COUNTY	TOTAL SHEETS	SHEET NO.
4006	22-00094-00-FP	KANE	105	33
		CONTRACT NO. 61L58		
	ILLINOIS	FED. AID PROJECT		

NOTES:

FOR PAVEMENT MARKING DETAILS, SEE IDOT DISTRICT 1 DETAIL TC-13.

ALL STAGE 1 AND 1A PAVEMENT MARKINGS SHALL BE PAVEMENT MARKING TAPE TYPE IV, UNLESS OTHERWISE NOTED.

ALL STAGE 2 PAVEMENT MARKINGS SHALL BE PAVEMENT MARKING TAPE TYPE IV, UNLESS OTHERWISE NOTED.

* SIGN SHALL BE TAKEN DOWN WHEN WORKERS ARE NOT PRESENT.

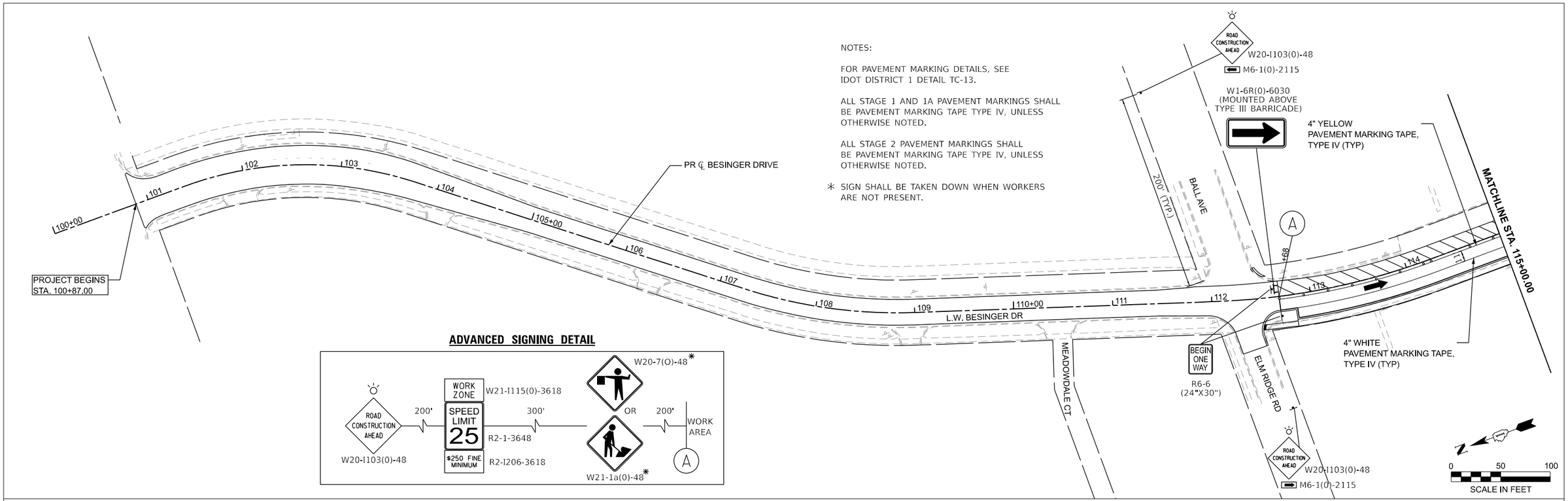

ADVANCED SIGNING DETAIL

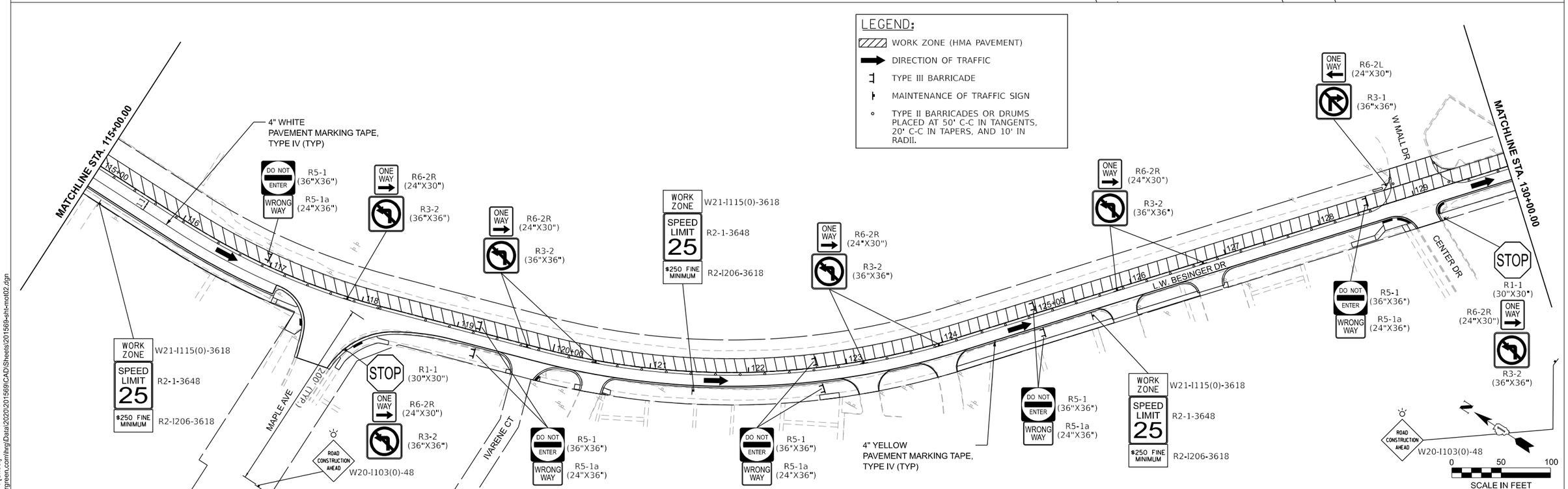

MODEL: mot02-1 [Sheet]
FILE NAME: \\hrgreen.com\hrg\Data\2020\201569\CAD\Sheets\201569-sht-mot02.dgn

HRGreen.com
Illinois Professional Design Firm # 184-001322

USER NAME = jhorwit	DESIGNED -	REVISED -	
	DRAWN - KRR	REVISED -	
PLOT SCALE = 0.16666633 ' / in.	CHECKED -	REVISED -	
PLOT DATE = 6/12/2025	DATE - 6/12/2025	REVISED -	

STATE OF ILLINOIS - DEPARTMENT OF TRANSPORTATION

SUGGESTED MAINTENANCE OF TRAFFIC - STAGE 2
L.W. BESINGER DRIVE

SCALE: 1"=50' | SHEET 6 OF 7 SHEETS | STA. 100+00.00 TO STA. 130+00.00

F.A.U. RTE.	SECTION	COUNTY	TOTAL SHEETS	SHEET NO.
4006	22-00094-00-FP	KANE	105	34
		CONTRACT NO. 61L58		
		ILLINOIS	FED. AID PROJECT	

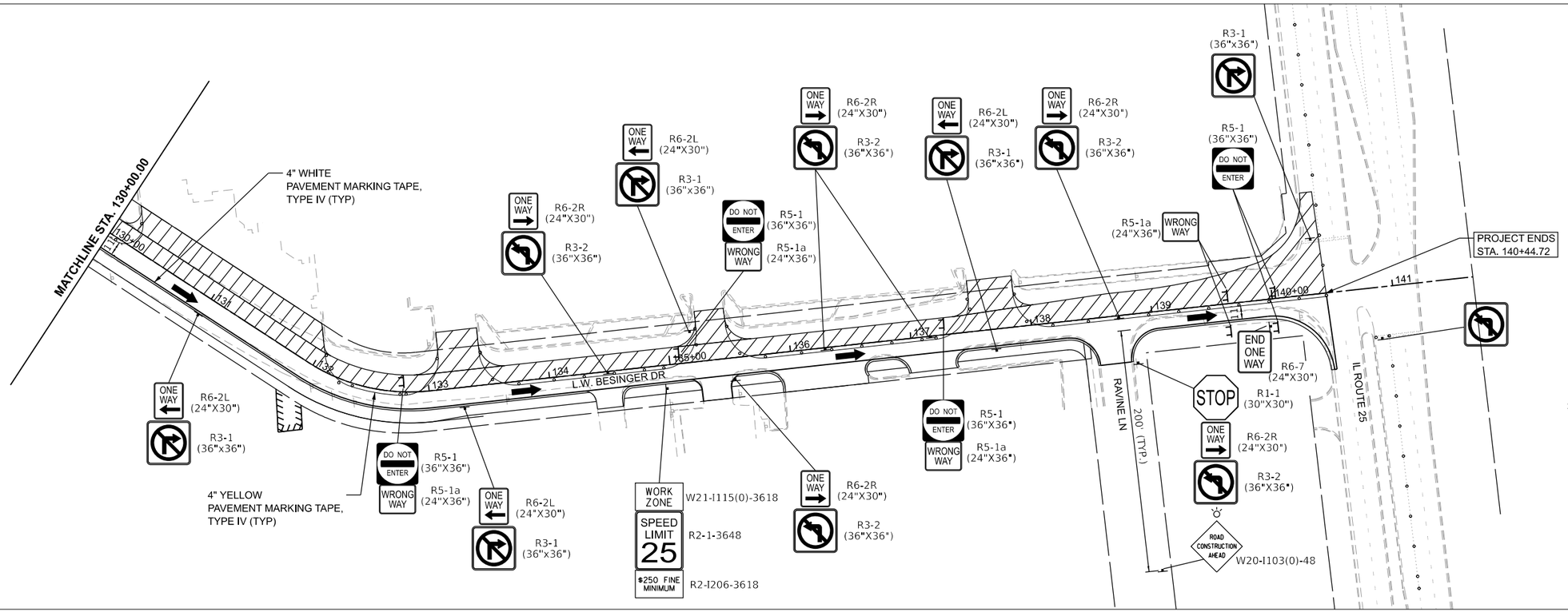

LEGEND:

- WORK ZONE (HMA PAVEMENT)
- DIRECTION OF TRAFFIC
- TYPE III BARRICADE
- MAINTENANCE OF TRAFFIC SIGN
- TYPE II BARRICADES OR DRUMS PLACED AT 50' C-C IN TANGENTS, 20' C-C IN TAPERS, AND 10' IN RADII.

NOTES:

FOR PAVEMENT MARKING DETAILS, SEE IDOT DISTRICT 1 DETAIL TC-13.

ALL STAGE 1 AND 1A PAVEMENT MARKINGS SHALL BE PAVEMENT MARKING TAPE TYPE IV, UNLESS OTHERWISE NOTED.

ALL STAGE 2 PAVEMENT MARKINGS SHALL BE PAVEMENT MARKING TAPE TYPE IV, UNLESS OTHERWISE NOTED.

* SIGN SHALL BE TAKEN DOWN WHEN WORKERS ARE NOT PRESENT.

N

0 50 100
SCALE IN FEET

MODEL: mot02-3 [Sheet]
FILE NAME: \\hrgreen.com\hrgData\2020\201569\CAD\Sheets\201569-sht-mot02.dgn

HRGreen.com
Illinois Professional Design Firm
184-001322
HRGreen

USER NAME = jhorwit	DESIGNED -	REVISED -	STATE OF ILLINOIS - DEPARTMENT OF TRANSPORTATION
	DRAWN - KRR	REVISED -	
PLOT SCALE = 0.16666633 ' / in.	CHECKED -	REVISED -	
PLOT DATE = 6/12/2025	DATE - 6/12/2025	REVISED -	

SUGGESTED MAINTENANCE OF TRAFFIC - STAGE 2
L.W. BESINGER DRIVE

SCALE: 1"=50' | SHEET 7 OF 7 SHEETS | STA. 130+00.00 TO STA. 145+00.00

F.A.U. RTE.	SECTION	COUNTY	TOTAL SHEETS	SHEET NO.
4006	22-00094-00-FP	KANE	105	35
		CONTRACT NO. 61L58		
	ILLINOIS	FED. AID PROJECT		

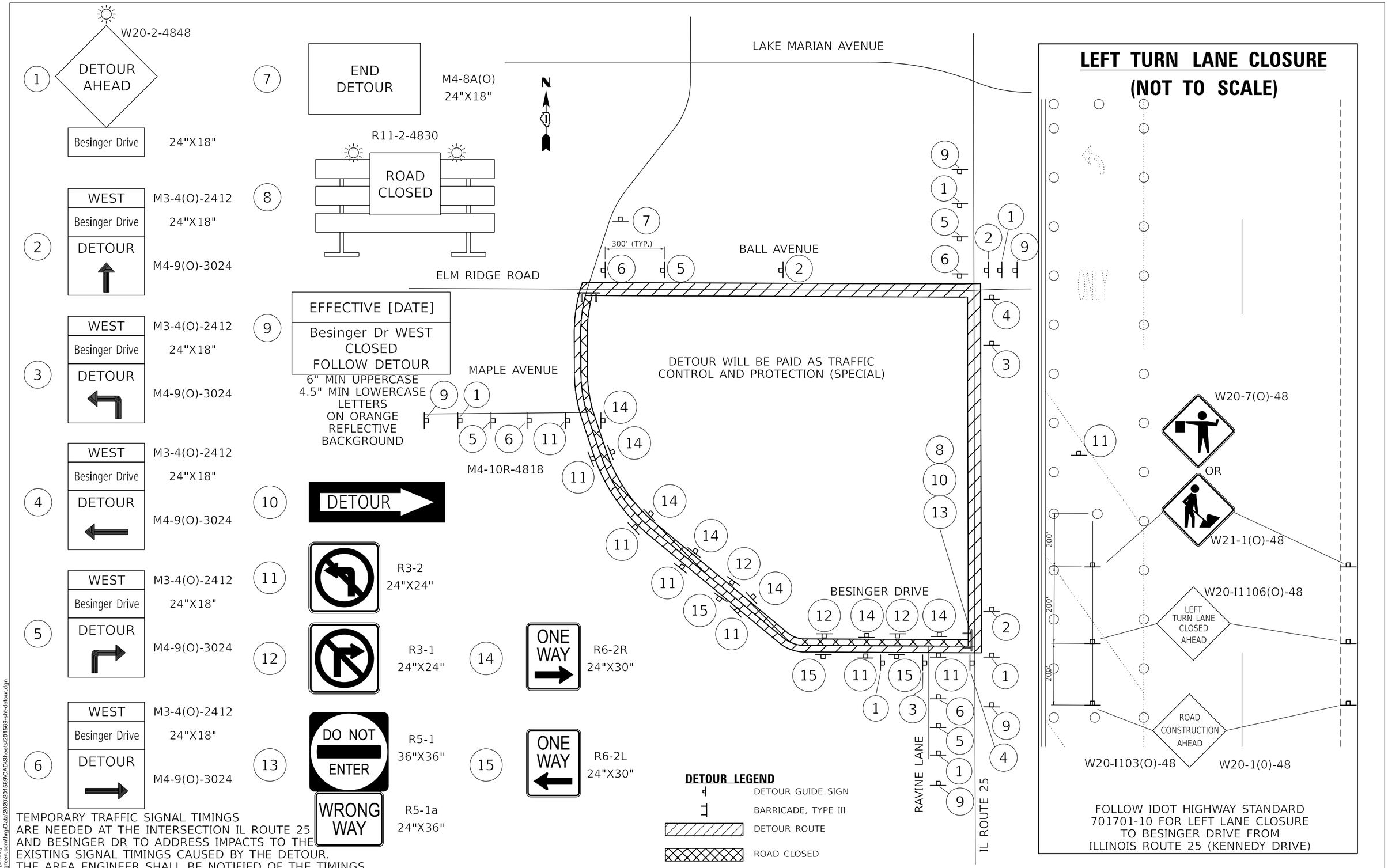

TEMPORARY TRAFFIC SIGNAL TIMINGS ARE NEEDED AT THE INTERSECTION IL ROUTE 25 AND BESINGER DR TO ADDRESS IMPACTS TO THE EXISTING SIGNAL TIMINGS CAUSED BY THE DETOUR. THE AREA ENGINEER SHALL BE NOTIFIED OF THE TIMINGS.

MODEL: Detour [Sheet]
FILE NAME: \\hrgreen.com\hrg\Data\2020\201569\CAD\Sheets\201569-sht-detour.dgn

HRGreen.com
Illinois Professional Design Firm # 184-001322

USER NAME = jhorwit	DESIGNED -	REVISED -	
	DRAWN - JCH	REVISED -	
PLOT SCALE = 0.16666633 ' / in.	CHECKED -	REVISED -	
PLOT DATE = 6/12/2025	DATE - 6/12/2025	REVISED -	

STATE OF ILLINOIS - DEPARTMENT OF TRANSPORTATION

DETOUR PLAN
L.W. BESINGER DRIVE

SCALE: SHEET 1 OF 1 SHEETS STA. TO STA.

F.A.U. RTE.	SECTION	COUNTY	TOTAL SHEETS	SHEET NO.
4006	22-00094-00-FP	KANE	105	36
		CONTRACT NO. 61L58		
		ILLINOIS	FED. AID PROJECT	

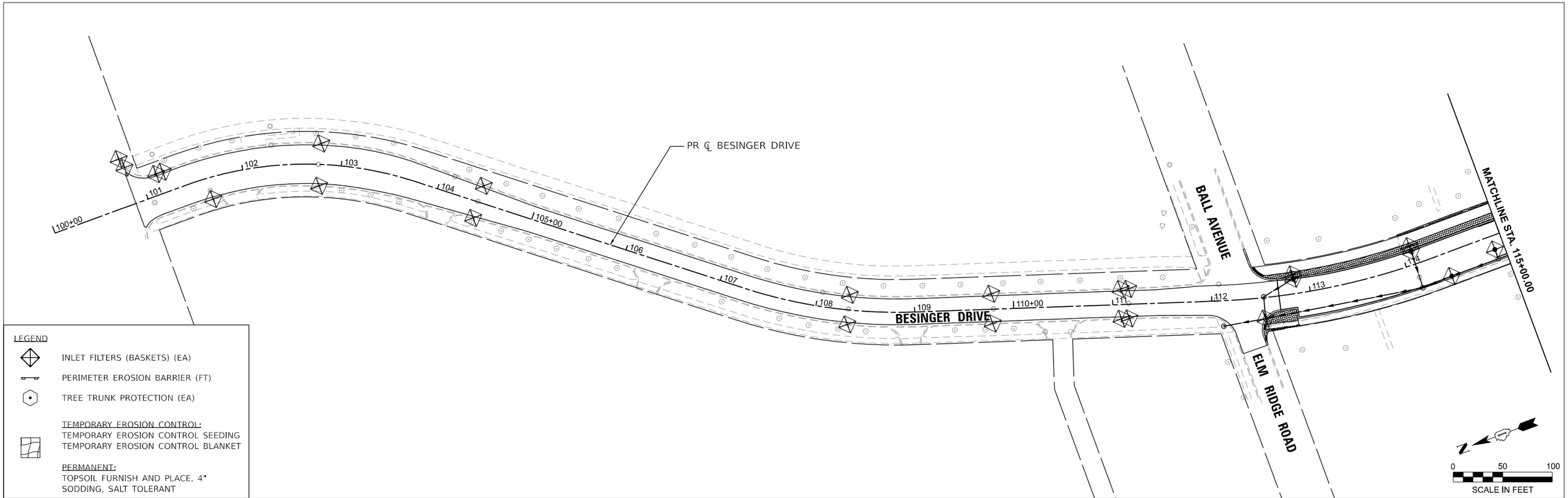

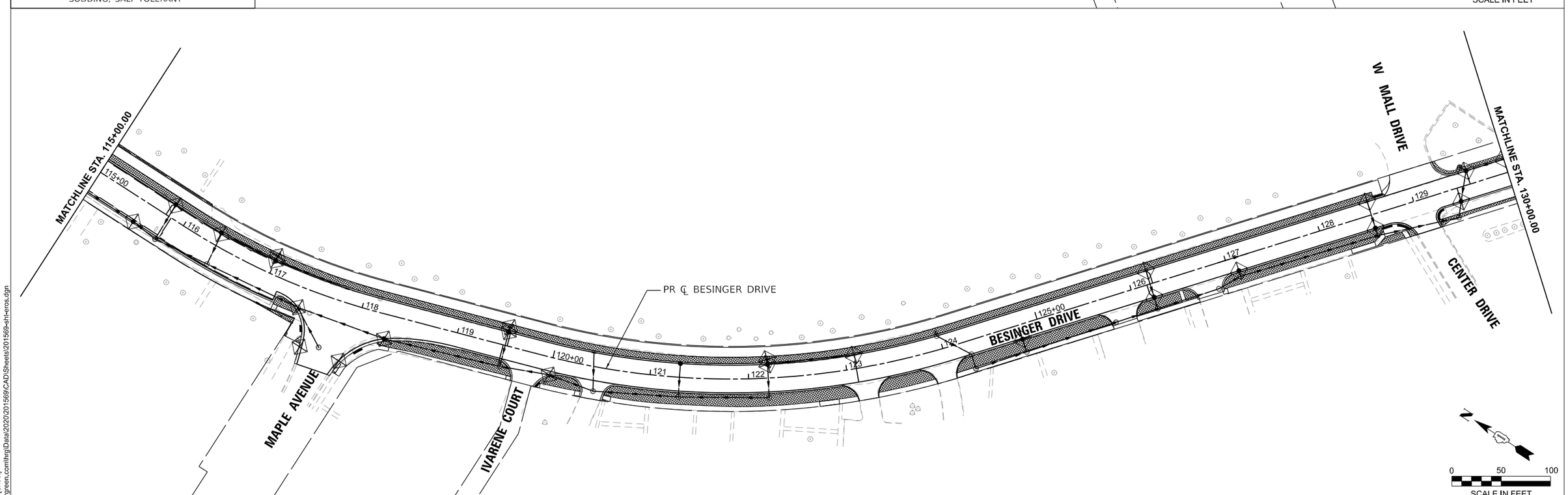

MODEL: eros-1 [Sheet]
FILE NAME: \\hrgreen.com\hrg\Data\2020\201569\CAD\Sheets\201569-sht-eros.dgn

HRGreen.com
Illinois Professional Design Firm
184-001322

USER NAME = jhorvit	DESIGNED -	REVISED -	
	DRAWN - BJB	REVISED -	
PLOT SCALE = 0.16666633 ' / in.	CHECKED -	REVISED -	
PLOT DATE = 6/12/2025	DATE - 6/12/2025	REVISED -	

STATE OF ILLINOIS - DEPARTMENT OF TRANSPORTATION

EROSION CONTROL AND LANDSCAPE PLAN
L.W. BESINGER DRIVE

SCALE: 1"=50' | SHEET 1 OF 2 SHEETS | STA. 100+00.00 TO STA. 130+00.00

F.A.U. RTE.	SECTION	COUNTY	TOTAL SHEETS	SHEET NO.
4006	22-00094-00-FP	KANE	105	37
		CONTRACT NO. 61L58		
		ILLINOIS FED. AID PROJECT		

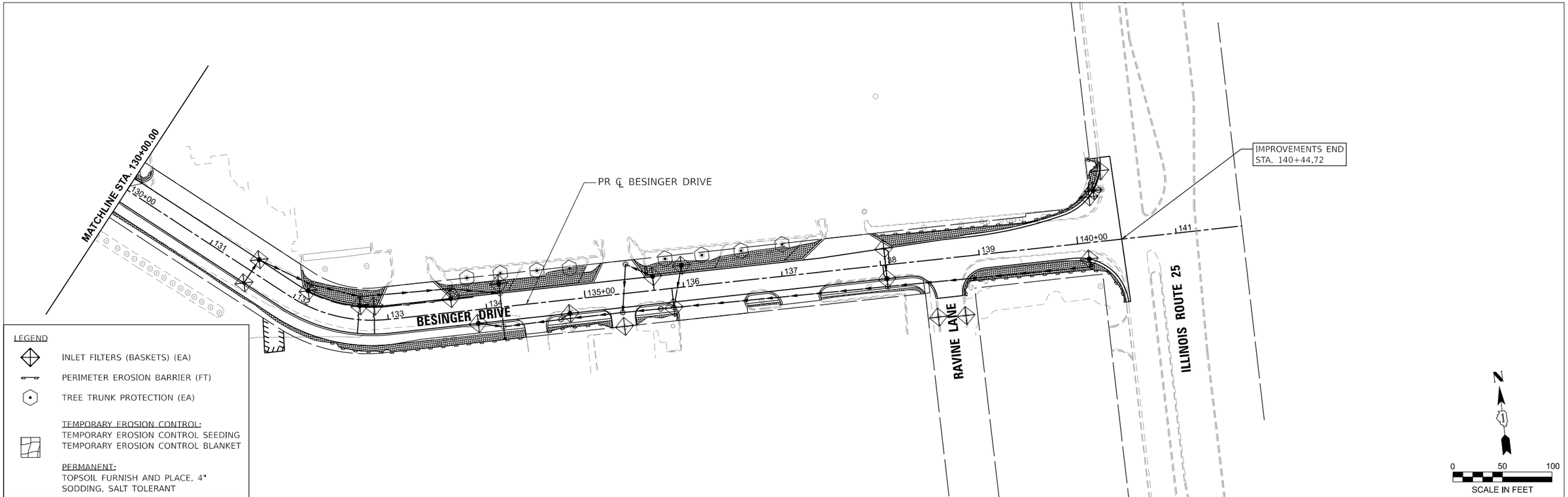

LEGEND

INLET FILTERS (BASKETS) (EA)

PERIMETER EROSION BARRIER (FT)

TREE TRUNK PROTECTION (EA)

TEMPORARY EROSION CONTROL:
TEMPORARY EROSION CONTROL SEEDING
TEMPORARY EROSION CONTROL BLANKET

PERMANENT:
TOPSOIL FURNISH AND PLACE, 4"
SODDING, SALT TOLERANT

MODEL: eros-2 [Sheet]
FILE NAME: 201569-sht-eros.dgn

HRGreen.com
Illinois Professional Design Firm
184-001322
HRGreen

USER NAME = jhorwit	DESIGNED -	REVISED -	
	DRAWN - BJB	REVISED -	
PLOT SCALE = 0.16666633 ' / in.	CHECKED -	REVISED -	
PLOT DATE = 6/12/2025	DATE - 6/12/2025	REVISED -	

STATE OF ILLINOIS - DEPARTMENT OF TRANSPORTATION

EROSION CONTROL AND LANDSCAPE PLAN
L.W. BESINGER DRIVE

SCALE: 1"=50' | SHEET 2 OF 2 SHEETS | STA. 130+00.00 TO STA. 145+00.00

F.A.U. RTE.	SECTION	COUNTY	TOTAL SHEETS	SHEET NO.
4006	22-00094-00-FP	KANE	105	38
		CONTRACT NO. 61L58		
	ILLINOIS	FED. AID PROJECT		

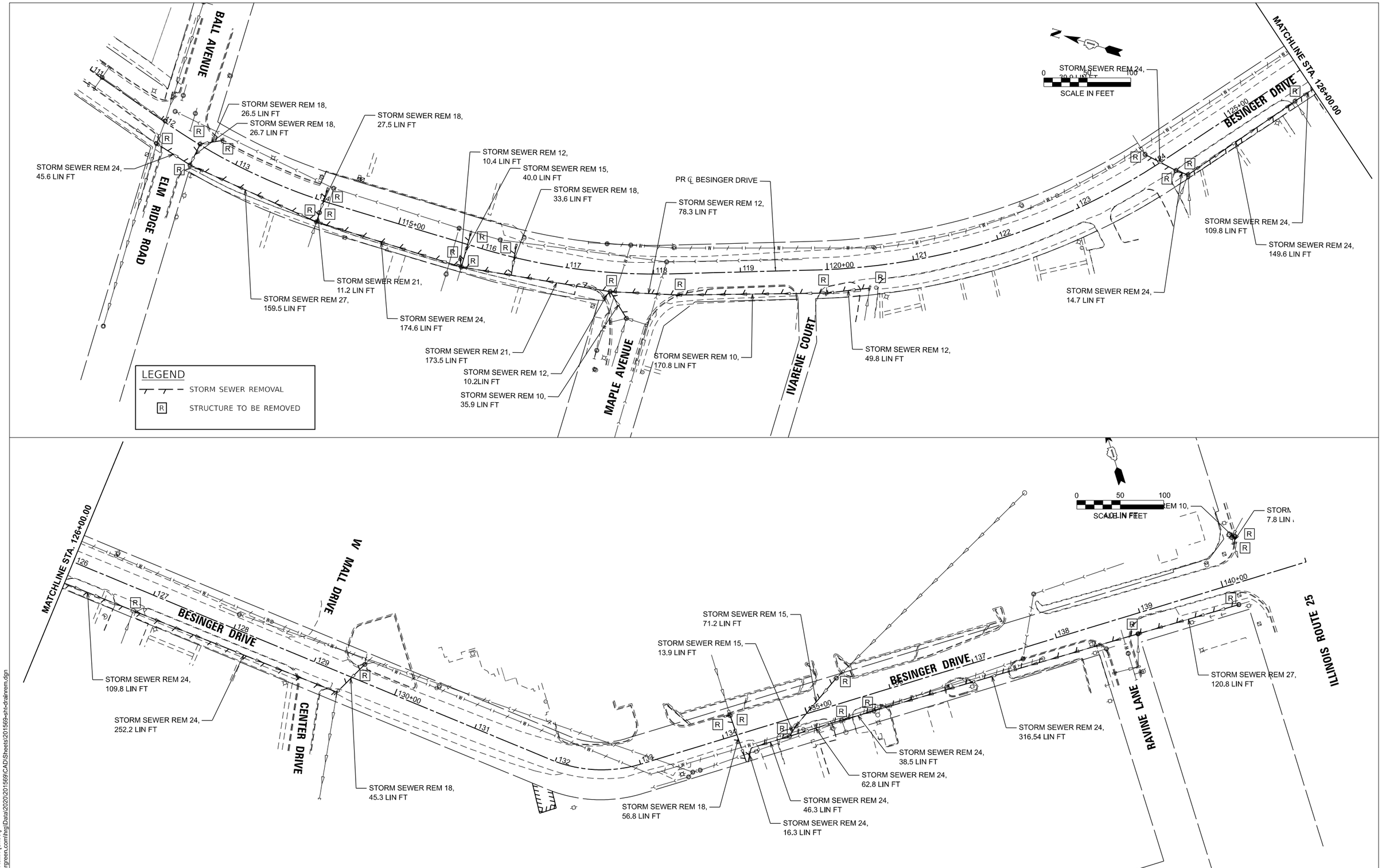

MODEL: Drain Rem1 [Sheet]
FILE NAME: \\hrgreen.com\hrg\Data\2020\201569\CAD\Sheets\201569-sht-drainrem.dgn

HRGreen.com
Illinois Professional Design Firm # 184-001322

USER NAME = jhorwitt	DESIGNED -		REVISED -	XX/XX/XXXX	
	DRAWN -	BJB	REVISED -	XX/XX/XXXX	
PLOT SCALE = 0.16666633 ' / in.	CHECKED -		REVISED -	XX/XX/XXXX	
PLOT DATE = 6/12/2025	DATE -	6/12/2025	REVISED -	XX/XX/XXXX	

STATE OF ILLINOIS - DEPARTMENT OF TRANSPORTATION

DRAINAGE REMOVAL PLANS
L.W. BESINGER DRIVE

SCALE: 1"=50' | SHEET 1 OF 1 SHEETS | STA. 111+00.00 TO STA. 141+00.00

F.A.U. RTE.	SECTION	COUNTY	TOTAL SHEETS	SHEET NO.
4006	22-00094-00-FP	KANE	105	39
		CONTRACT NO. 61L58		
		ILLINOIS FED. AID PROJECT		

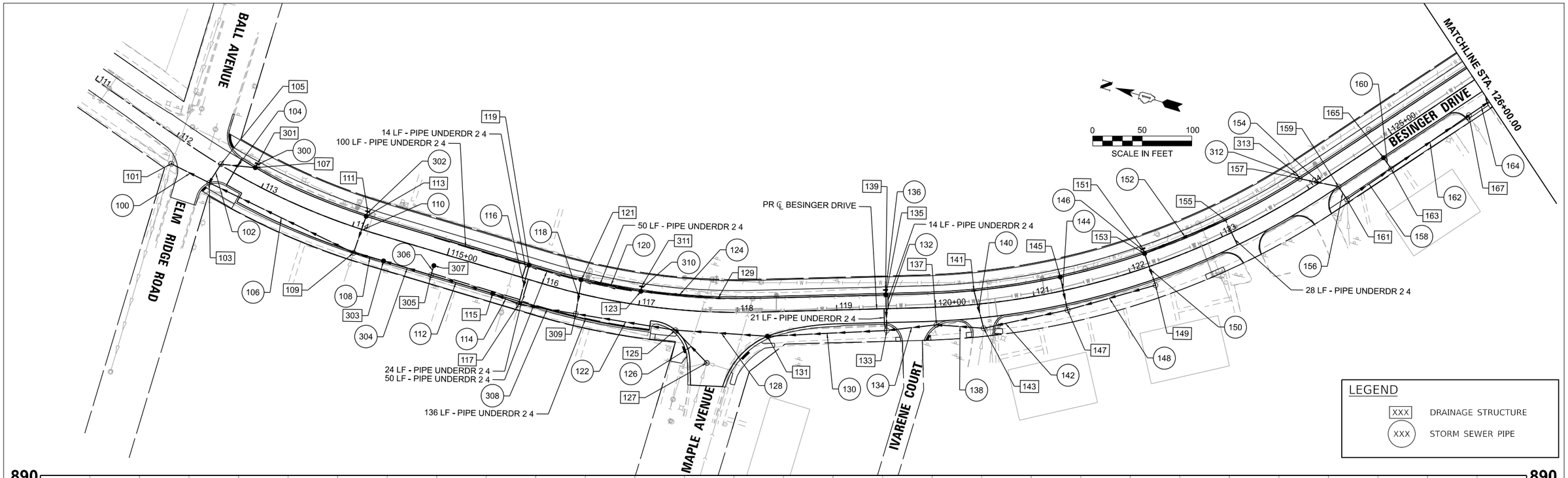

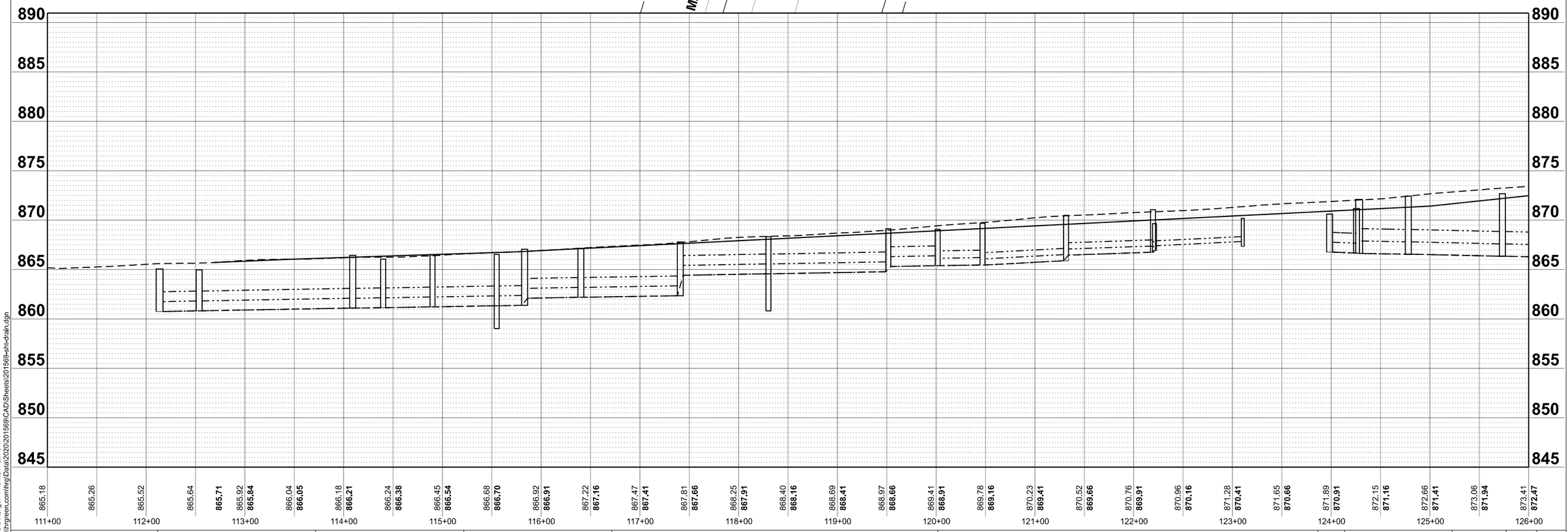

MODEL: PrCL-Besinger-1 - Drain Plan Sht 1
FILE NAME: \\hrgreen.com\hrg\Data\2020\201569\CAD\Sheets\201569-sht-drain.dgn

HRGreen.com
Illinois Professional Design Firm # 184-001322

USER NAME = jhorwit	DESIGNED -	REVISED -	
	DRAWN - BJB	REVISED -	
PLOT SCALE = 0.16666633 ' / in.	CHECKED -	REVISED -	
PLOT DATE = 6/12/2025	DATE - 6/12/2025	REVISED -	

STATE OF ILLINOIS - DEPARTMENT OF TRANSPORTATION

DRAINAGE PLAN AND PROFILE
L.W. BESINGER DRIVE

SCALE: 1"=50' | SHEET 1 OF 4 SHEETS | STA. 111+00.00 TO STA. 126+00.00

F.A.U. RTE.	SECTION	COUNTY	TOTAL SHEETS	SHEET NO.
4006	22-00094-00-FP	KANE	105	40

CONTRACT NO. 61L58

ILLINOIS | FED. AID PROJECT

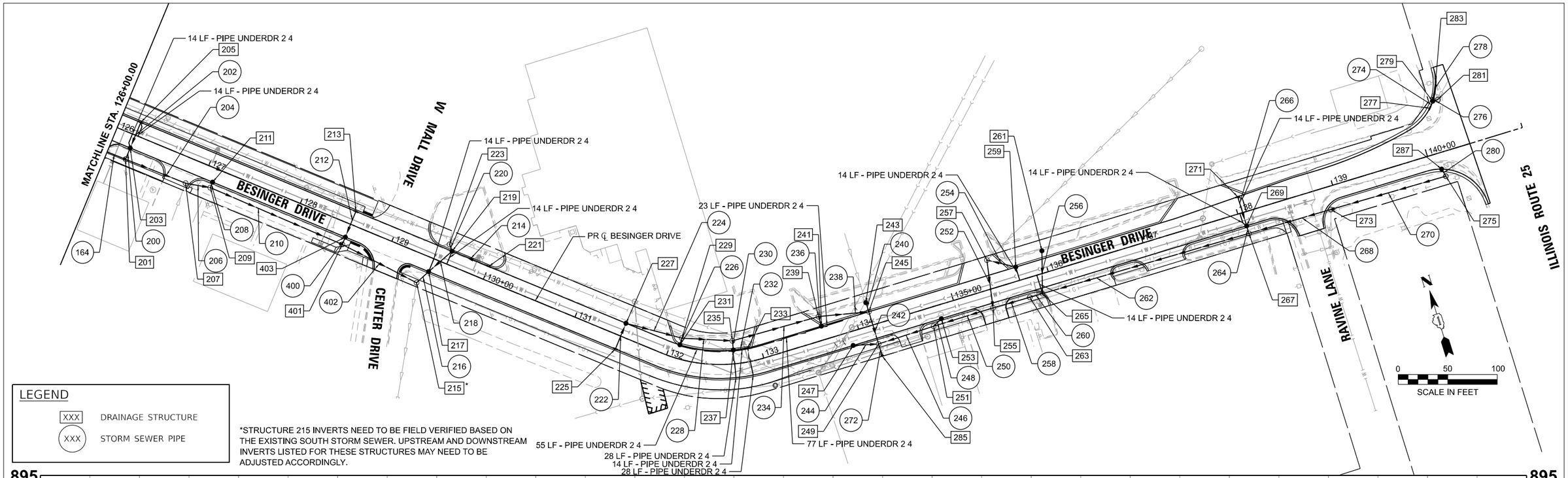

LEGEND

XXX DRAINAGE STRUCTURE

XXX STORM SEWER PIPE

*STRUCTURE 215 INVERTS NEED TO BE FIELD VERIFIED BASED ON THE EXISTING SOUTH STORM SEWER. UPSTREAM AND DOWNSTREAM INVERTS LISTED FOR THESE STRUCTURES MAY NEED TO BE ADJUSTED ACCORDINGLY.

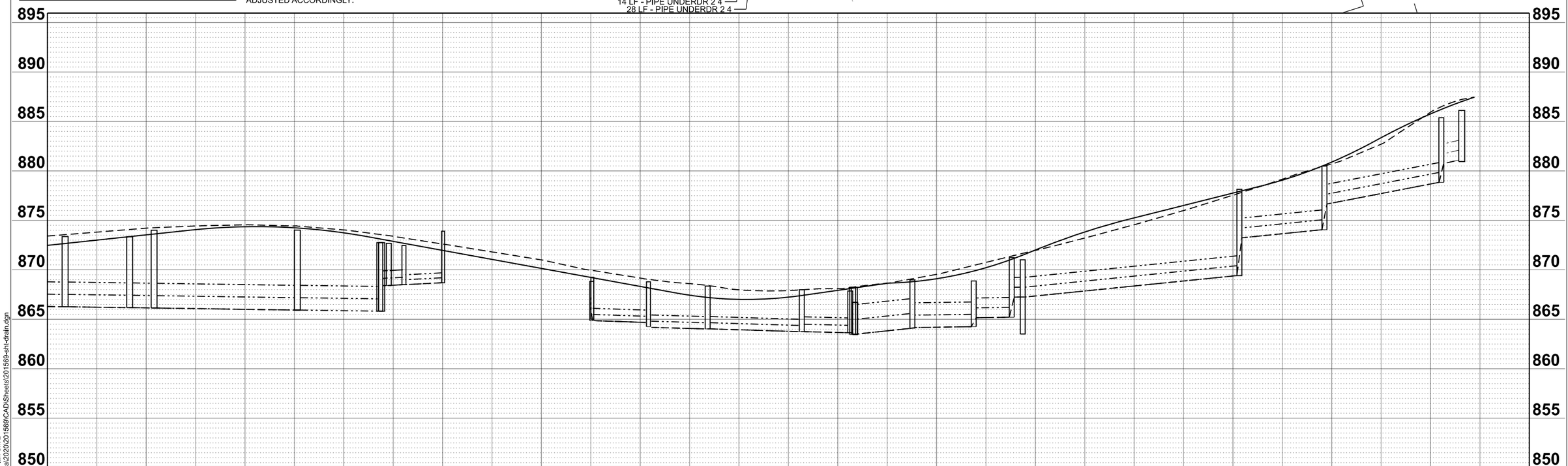

MODEL: PrCL-Besinger-1 - Drain Plan Sht 2
FILE NAME: \\hrgreen.com\hrg\Data\2020\201569\CAD\Sheets\201569-sht-drain.dgn

HRGreen.com
Illinois Professional Design Firm # 184-001322

USER NAME = jhorwit	DESIGNED -	REVISED -	
	DRAWN - BJB	REVISED -	
PLOT SCALE = 0.16666633 ' / in.	CHECKED -	REVISED -	
PLOT DATE = 6/12/2025	DATE - 6/12/2025	REVISED -	

STATE OF ILLINOIS - DEPARTMENT OF TRANSPORTATION

DRAINAGE PLAN AND PROFILE
L.W. BESINGER DRIVE

SCALE: 1"=50' | SHEET 2 OF 4 SHEETS | STA. 126+00.00 TO STA. 141+00.00

F.A.U. RTE.	SECTION	COUNTY	TOTAL SHEETS	SHEET NO.
4006	22-00094-00-FP	KANE	105	41

CONTRACT NO. 61L58

ILLINOIS | FED. AID PROJECT

STRUCTURE NUMBER	STATION	OFFSET (FT)	STRUCTURE TYPE	FRAME & GRATE	RIM ELEVATION	STORM SEWER INVERTS							
						NORTH	NORTHWEST	WEST	SOUTHWEST	SOUTH	SOUTHEAST	EAST	NORTHEAST
LW BESINGER DR													
101	112+11.1	25.92' RT	MANHOLE, TYPE A, 7'-DIAMETER	TYPE 1 CL	865.55	EX 860.75		EX 860.75		860.75		EX 861.65	
103	112+52.25	21.23' RT	MANHOLE, TYPE A, 6'-DIAMETER	TYPE 11	864.96	860.82			6" PVC	860.82		862.00	
105	112+52.84	1.04' LT	MANHOLE, TYPE A, 5'-DIAMETER	TYPE 1 CL	865.64			862.09			862.09		
107	112+85.00	14.00' LT	CATCH BASIN, TYPE A, 4'-DIAMETER	TYPE 11	865.48		862.25					862.25	
109	114+09.25	24.00' RT	MANHOLE, TYPE A, 6'-DIAMETER	TYPE 11	866.61	861.09		EX 861.58		861.09		863.00	
111	114+10.00	19.00' LT	CATCH BASINS, TYPE C	TYPE 4342 GRATE	866.08			863.20					
113	114+10.00	14.00' LT	CATCH BASIN, TYPE A, 4'-DIAMETER	TYPE 11	865.96			863.18				863.18	
115	115+55.00	24.00' RT	CATCH BASIN, TYPE A, 5'-DIAMETER	TYPE 11	866.52	861.33				861.33			
117	115+83.19	26.96' RT	MANHOLE, TYPE A, 6'-DIAMETER	TYPE 11	866.59	861.37		EX 862.26		862.09		863.35	
119	115+82.00	14.00' LT	CATCH BASINS, TYPE C	TYPE 11	866.54			863.54					
121	116+38.00	14.00' LT	CATCH BASINS, TYPE C	TYPE 11	866.82			864.00		864.00			
123	117+00.00	14.00' LT	CATCH BASIN, TYPE A, 4'-DIAMETER	TYPE 11	867.13	864.29				864.29		864.48	
125	117+39.05	20.85' RT	MANHOLE, TYPE A, 6'-DIAMETER	TYPE 11	867.92	862.35			863.35	864.42			
127	117+71.67	51.51' RT	MANHOLE, TYPE A, 6'-DIAMETER	TYPE 1 CL	868.23		EX 864.56	EX 863.96		EX 863.96			863.55
129	117+80.00	14.00' LT	INLET, TYPE A	TYPE 11	867.53	864.67							
131	118+29.48	24.62' RT	CATCH BASIN, TYPE A, 5'-DIAMETER	TYPE 11	868.44	864.57				864.57			
133	119+50.00	22.00' RT	MANHOLE, TYPE A, 5'-DIAMETER	TYPE 1 CL	869.12	864.77				865.30		866.22	
135	119+50.00	14.00' LT	CATCH BASIN, TYPE A, 4'-DIAMETER	TYPE 11	868.38			866.38				866.38	
137	120+00.00	17.75' RT	MANHOLE, TYPE A, 5'-DIAMETER	TYPE 11	869.19	865.38				865.38			
139	119+50.00	19.00' LT	CATCH BASINS, TYPE C	TYPE 4342 GRATE	868.50			866.40					
141	120+40.00	14.00' LT	CATCH BASINS, TYPE C	TYPE 11	868.83				866.05				
143	120+45.96	24.73' RT	MANHOLE, TYPE A, 5'-DIAMETER	TYPE 1	869.69	865.46		EX 867.25			865.46		865.86
145	121+30.00	14.00' LT	CATCH BASINS, TYPE C	TYPE 11	869.28				866.53				
147	121+30.00	20.00' RT	MANHOLE, TYPE A, 5'-DIAMETER	TYPE 1 CL	870.49		865.88				866.46		866.37
149	122+20.00	20.00' RT	MANHOLE, TYPE A, 5'-DIAMETER	TYPE 1 CL	871.05		866.75						866.75
151	122+20.00	19.00' LT	CATCH BASINS, TYPE C	TYPE 4342 GRATE	869.85				866.92				
153	122+20.00	14.00' LT	CATCH BASIN, TYPE A, 4'-DIAMETER	TYPE 11	869.73				866.90		866.90		866.90
155	123+10.00	14.00' LT	INLET, TYPE A	TYPE 11	870.18		867.33						
157	123+97.50	14.00' LT	MANHOLE, TYPE A, 6'-DIAMETER	TYPE 11	870.61				866.76				866.76
159	124+26.00	14.00' RT	MANHOLE, TYPE A, 6'-DIAMETER	TYPE 1 CL	871.17		866.66		866.66				
161	124+25.92	29.33' RT	MANHOLE, TYPE A, 7'-DIAMETER	TYPE 1 CL	872.19			EX 866.80	EX 866.70		866.63		866.63
163	124+80.00	28.39' RT	MANHOLE, TYPE A, 6'-DIAMETER	TYPE 1 CL	872.71		866.56				866.56		867.95
165	124+80.00	14.00' RT	CATCH BASINS, TYPE C	TYPE 11	871.03				868.00				
167	125+75.45	26.72' RT	MANHOLE, TYPE A, 6'-DIAMETER	TYPE 1 CL	872.17		866.35		EX 866.47		866.35		
201	126+20.00	26.19' RT	MANHOLE, TYPE A, 6'-DIAMETER	TYPE 1 CL	873.42		866.26				866.26		869.17
203	126+20.00	14.00' RT	CATCH BASIN, TYPE A, 4'-DIAMETER	TYPE 11	872.40				869.25				869.25
205	126+20.00	14.00' LT	INLET, TYPE A	TYPE 11	872.40				869.40				
207	126+85.26	25.42' RT	MANHOLE, TYPE A, 6'-DIAMETER	TYPE 1 CL	873.43		866.18		EX 866.99		866.18		
209	127+10.00	20.00' RT	MANHOLE, TYPE A, 6'-DIAMETER	TYPE 1 CL	874.04		866.13				866.13		870.34
211	127+10.00	14.00' RT	CATCH BASINS, TYPE C	TYPE 11	873.36				870.36				
213	128+55.00	14.00' LT	INLET, TYPE A	TYPE 11	873.94				870.94				
215	129+39.02	28.99' RT	MANHOLE, TYPE A, 6'-DIAMETER	TYPE 1 CL	872.74		865.82			FIELD VERIFY			868.38
217	129+46.00	14.00' RT	CATCH BASIN, TYPE A, 4'-DIAMETER	TYPE 11	872.67				868.42				868.42
219	129+60.00	14.00' LT	CATCH BASIN, TYPE A, 5'-DIAMETER	TYPE 11	872.41	869.25			868.50		868.50		
221	130+00.00	14.00' LT	INLET, TYPE A	TYPE 11	871.69		868.69						
223	129+54.97	19.43' LT	MANHOLE, TYPE A, 6'-DIAMETER	TYPE 1	872.87	EX 869.42				869.27		EX 869.42	EX 869.42
225	131+50.00	14.00' RT	INLET, TYPE A	TYPE 11	869.25								866.21
227	131+50.00	14.00' LT	CATCH BASIN, TYPE A, 4'-DIAMETER	TYPE 11	868.96				865.96		864.86		
229	132+10.00	21.00' LT	MANHOLE, TYPE A, 5'-DIAMETER	TYPE 1 CL	869.10		864.68		864.60			864.18	
231	132+10.00	14.00' LT	CATCH BASINS, TYPE C	TYPE 11	867.64								864.64
233	132+86.00	14.00' LT	INLET, TYPE A	TYPE 11	866.55			864.10					
235	132+70.00	23.28' LT	MANHOLE, TYPE A, 5'-DIAMETER	TYPE 1 CL	868.36			864.02		864.02		864.02	
237	132+70.00	14.00' LT	CATCH BASIN, TYPE A, 4'-DIAMETER	TYPE 11	866.63	864.04						864.04	
239	133+65.00	24.00' LT	MANHOLE, TYPE A, 5'-DIAMETER	TYPE 1 CL	867.99			863.75		864.10		863.75	
241	133+65.00	14.00' LT	CATCH BASIN, TYPE A, 4'-DIAMETER	TYPE 11	867.15	864.15							
243	134+14.79	23.61' LT	CATCH BASIN, TYPE A, 5'-DIAMETER	TYPE 4342 GRATE	868.09	EX 865.20				864.20			
245	134+15.00	14.00' LT	MANHOLE, TYPE A, 6'-DIAMETER	TYPE 1 CL	867.86	864.15		863.63		863.63			
247	133+90.00	14.00' RT	CATCH BASINS, TYPE C	TYPE 11	867.50						864.50		
249	134+15.00	20.03' RT	MANHOLE, TYPE A, 7'-DIAMETER	TYPE 1 CL	868.26	863.49	864.39			863.49		863.49	
251	134+73.34	19.06' RT	MANHOLE, TYPE A, 6'-DIAMETER	TYPE 1 CL	868.99			864.07				864.16	865.72
253	134+83.00	14.00' RT	CATCH BASINS, TYPE C	TYPE 11	868.59				865.79				
255	135+36.10	18.83' RT	MANHOLE, TYPE A, 6'-DIAMETER	TYPE 1	869.37	865.80		864.25		EX 865.21		865.15	
257	135+44.18	29.22' LT	MANHOLE, TYPE A, 6'-DIAMETER	TYPE 1	870.79					866.24	867.37		EX 867.55
259	135+70.00	14.00' LT	CATCH BASINS, TYPE C	TYPE 11	870.57		867.50						
261	136+00.00	22.00' LT	CATCH BASINS, TYPE C	TYPE 4342 GRATE	871.52					868.17			
263	135+74.61	19.35' RT	MANHOLE, TYPE A, 5'-DIAMETER	TYPE 1 CL	871.23			865.21	EX 868.08			867.23	
265	135+88.01	19.50' RT	CATCH BASIN, TYPE A, 5'-DIAMETER	TYPE 11	871.04	867.98		867.25				867.25	
267	138+05.00	21.93' RT	MANHOLE, TYPE A, 5'-DIAMETER	TYPE 1 CL	878.13	874.24		869.41				873.24	
269	138+05.00	14.00' RT	CATCH BASIN, TYPE A, 4'-DIAMETER	TYPE 11	877.60	874.26				874.26			
271	138+05.00	16.64' LT	INLET, TYPE A	TYPE 11	877.42					874.40			
273	138+91.13	22.89' RT	MANHOLE, TYPE A, 5'-DIAMETER	TYPE 1 CL	880.50			874.05		EX 876.75		876.65	
275	140+11.90	24.46' RT	MANHOLE, TYPE A, 6'-DIAMETER	TYPE 1 CL	885.37	882.30		878.85				EX 880.73	
277	140+15.71	46.69' LT	INLET, TYPE A	TYPE 24	885.42								882.42
279	140+21.39	51.77' LT	CATCH BASIN, TYPE A, 4'-DIAMETER	TYPE 24	885.85				882.37			882.37	882.37
281	140+26.44	51.79' LT	MANHOLE, TYPE A, 5'-DIAMETER	TYPE 1 CL	886.11			882.35		EX 881.10			EX 881.10
283	140+28.93	71.29' LT	INLET, TYPE A	TYPE 24	886.60				882.46				
285	134+15.00	33.92' RT	PRECAST REINFORCED CONCRETE FLARED END SECTIONS, EQUIVALENT ROUND-SIZE 42"			863.45							
287	140+10.00	16.37' RT	CATCH BASINS, TYPE C	TYPE 24	885.68					882.35			

MODEL: sch-drain [Sheet]
FILE NAME: \\hrgreen.com\hrg\Data\2020\201569\CAD\Sheets\201569-sht-sch-drain.dgn

HRGreen.com
Illinois Professional Design Firm
184-001322

USER NAME = jhorwit	DESIGNED - XXX	REVISED - XX/XX/XXXX	STATE OF ILLINOIS - DEPARTMENT OF TRANSPORTATION
	DRAWN - XXX	REVISED - XX/XX/XXXX	
PLOT SCALE = 0.16666633 ' / in.	CHECKED - XXX	REVISED - XX/XX/XXXX	
PLOT DATE = 6/12/2025	DATE - XX/XX/XXXX	REVISED - XX/XX/XXXX	

DRAINAGE PLAN AND PROFILE SCHEDULES
L.W. BESINGER DRIVE

SCALE: SHEET 3 OF 4 SHEETS STA. TO STA.

F.A.U. RTE.	SECTION	COUNTY	TOTAL SHEETS	SHEET NO.
4006	22-00094-00-FP	KANE	105	42

CONTRACT NO. 61L58

ILLINOIS FED. AID PROJECT

STRUCTURE NUMBER	STATION	OFFSET (FT)	STRUCTURE TYPE	FRAME & GRATE	RIM ELEVATION	STORM SEWER INVERTS							
						NORTH	NORTHWEST	WEST	SOUTHWEST	SOUTH	SOUTHEAST	EAST	NORTHEAST
LW BESINGER DR													
301	112+85.00	19.50' LT	CATCH BASINS, TYPE C	TYPE 4342 GRATE	865.55			862.27					
303	114+40.00	24.00' RT	CATCH BASIN, TYPE A, 5'-DIAMETER	TYPE 11	866.05	861.14				861.14			
305	114+90.00	24.00' RT	MANHOLE, TYPE A, 5'-DIAMETER	TYPE 1 CL	866.48	861.22				861.22		862.93	
307	114+90.00	14.00' RT	CATCH BASINS, TYPE C	TYPE 1 OL	866.23			863.00					
309	116+40.00	20.77' RT	MANHOLE, TYPE A, 5'-DIAMETER	TYPE 1 CL	867.13	862.19				862.19		863.68	
311	117+00.00	19.00' LT	CATCH BASINS, TYPE C	TYPE 4342 GRATE	867.25			864.50					
313	123+97.42	19.73' LT	CONNECTION TO EXISTING SEWER						866.78				
401	128+55.00	22.00' RT	MANHOLE, TYPE A, 6'-DIAMETER	TYPE 1 CL	874.02		865.93				865.93		870.76
403	128+55.00	14.00' RT	CATCH BASIN, TYPE A, 4'-DIAMETER	TYPE 11	873.94				870.80				870.80

PIPE NO.	FROM STRUCT	TO STRUCT.	RUBBER GASKET	CLASS	TYPE	SIZE DIA. (IN)	LENGTH (FT)	PIPE SLOPE	TBF (CY)
100	103	101		A	1	24	38	0.18%	6.7
102	105	103		A	1	12	18	0.50%	2.4
104	107	105		A	1	12	31	0.52%	4.1
106	109	103		A	2	24	157	0.17%	36.9
108	303	109		A	2	24	27	0.19%	8.0
110	113	109		A	1	12	35	0.51%	4.7
112	115	305		A	2	24	60	0.18%	17.7
114	117	115		A	1	24	24	0.17%	7.1
116	119	117		A	1	12	37	0.51%	4.9
118	121	309		A	1	15	32	1.00%	3.9
120	123	121	RG	A	1	12	58	0.50%	7.7
122	125	309		A	2	24	97	0.16%	28.6
124	129	123		A	1	12	76	0.50%	10.1
126	127	125		A	2	12	41	0.49%	9.7
128	131	125	RG	A	1	24	88	0.17%	10.3
130	133	131		A	1	24	116	0.17%	44.5
132	135	133	RG	A	1	12	32	0.50%	4.3
134	137	133		A	1	24	46	0.17%	5.4
136	139	135		A	1	12	2	1.00%	0.3
138	143	137		A	1	18	44	0.18%	6.9
140	141	143	RG	A	1	12	37	0.51%	4.9
142	147	143	RG	A	2	15	83	0.51%	53.3
144	145	147	RG	A	1	12	31	0.52%	4.1
146	151	153		A	1	12	2	1.00%	0.3
148	149	147		A	1	15	89	0.33%	33.4
150	153	149	RG	A	2	12	30	0.50%	4.0
152	155	153		A	1	12	86	0.50%	11.4
154	157	159	RG	A	1	24	36	0.28%	4.2
156	159	161		A	2	24	11	0.27%	3.0
158	161	163		A	2	30	51	0.14%	38.4
160	165	163		A	2	12	10	0.50%	1.6
162	163	167		A	2	30	160	0.13%	134.6
164	167	201		A	2	30	40	0.23%	28.3
200	203	201		A	2	12	8	1.00%	2.6
202	205	203	RG	A	1	12	25	0.60%	3.3
204	201	207		A	2	30	61	0.13%	73.4
206	207	209		A	2	30	21	0.24%	27.2
208	211	209		A	1	12	3	0.67%	0.4
210	209	401	RG	A	2	30	140	0.14%	193.5
212	213	403	RG	A	1	12	25	0.56%	3.3
214	221	219	RG	A	1	12	37	0.51%	4.9
216	217	215		A	1	18	12	0.33%	2.2
218	219	217	RG	A	1	18	27	0.30%	4.2
220	223	219		A	1	12	2	1.00%	0.3
222	225	227	RG	A	1	12	25	1.00%	3.3
224	227	229		A	1	15	54	0.33%	10.3
226	231	229		A	2	12	4	1.00%	0.6
228	229	235		A	2	15	47	0.34%	31.8
230	237	235	RG	A	2	12	5	0.40%	0.7
232	233	237	RG	A	1	12	12	0.50%	1.6
234	235	239	RG	A	1	15	85	0.32%	16.2
236	241	239		A	1	12	7	0.71%	1.0
238	239	245		A	1	18	46	0.26%	18.8
240	243	245		A	1	18	5	1.00%	0.7
242	245	249		A	1	EQRS 30	28	0.50%	6.3
244	247	249		A	1	12	22	0.50%	3.0
246	251	249		A	1	36	53	1.09%	9.0
248	253	251		A	1	12	7	1.00%	1.0
250	255	251		A	1	30	58	0.16%	11.2
252	257	255	RG	A	1	24	44	1.00%	5.2
254	259	257		A	1	12	26	0.50%	3.5
256	261	265	RG	A	1	12	40	0.46%	5.3
258	263	255		A	2	24	34	0.18%	9.0
260	265	263	RG	A	1	24	9	0.22%	1.1
262	267	265		A	2	24	212	1.02%	179.4
264	269	267		A	1	12	4	0.50%	1.0

PIPE NO.	FROM STRUCT	TO STRUCT.	RUBBER GASKET	CLASS	TYPE	SIZE DIA. (IN)	LENGTH (FT)	PIPE SLOPE	TBF (CY)
266	271	269	RG	A	1	12	28	0.50%	3.7
268	273	267	RG	A	2	24	81	1.00%	28.6
270	275	273		A	2	24	116	1.90%	47.8
272	249	285		A	1	EQRS 42	5	0.80%	1.1
274	277	279		A	1	12	5	1.00%	0.7
276	279	281		A	1	12	2	1.00%	0.3
278	283	279		A	1	12	18	0.50%	2.8
280	287	275		A	1	12	5	1.00%	0.7
300	301	107		A	1	12	2	1.00%	0.3
302	111	113		A	1	12	2	1.00%	0.3
304	305	303		A	2	24	45	0.18%	11.9
306	307	305		A	1	12	7	1.00%	1.0
308	309	117		A	1	24	54	0.19%	11.1
310	311	123		A	1	12	2	1.00%	0.3
312	151	153		A	1	12	2	1.00%	0.3
312	313	157		A	1	24	4	0.50%	0.5
400	403	401		A	1	12	4	1.00%	0.6
402	401	215		A	2	30	79	0.14%	70.0

PROPOSED PIPE UNDERDRAIN SCHEDULE

LOCATION						PIPE UNDERDRAINS TYPE 2
UPSTREAM BEGIN STATION	OFFSET (FOOT)		DOWNSTREAM END STATION	OFFSET (FOOT)		4" (FOOT) 60108204
ILLINOIS ROUTE 19						
114+82	14.0	LT	115+82	14.0	LT	100.0
115+55	24.0	RT	114+90	24.0	RT	65.0
115+82	0.0		115+82	14.0	LT	14.0
115+83	24.0	RT	115+56	24.0	RT	27.0
115+83	0.0		115+83	24.0	RT	24.0
116+33	14.0	LT	115+84	14.0	LT	48.0
116+91	14.0	LT	116+36	14.0	LT	53.0
117+14	24.0	RT	115+83	24.0	RT	136.0
119+48	0.0		119+48	20.0	RT	21.0
119+52	0.0		119+52	14.0	LT	14.0
123+10	14.0	RT	123+10	14.0	LT	28.0
126+20	0.0		126+20	14.0	RT	14.0
126+20	0.0		126+20	14.0	LT	14.0
129+46	0.0		129+46	14.0	RT	14.0
129+60	0.0		129+60	14.0	LT	14.0
132+10	14.0	LT	132+70	14.0	LT	55.0
132+70	14.0	RT	132+70	14.0	LT	28.0
132+70	14.0	LT	132+86	14.0	LT	14.0
132+86	14.0	RT	132+86	14.0	LT	28.0
133+65	14.0	LT	132+86	14.0	LT	77.0
133+88	14.0	LT	133+65	14.0	LT	23.0
135+70	0.0		135+70	14.0	LT	14.0
135+88	0.0		135+88	18.0	RT	20.0
138+05	0.0		138+05	14.0	RT	14.0
138+05	0.0		138+05	16.6	LT	14.0
SUBTOTAL BESINGER DRIVE						873
TOTAL						873

MODEL: sch-drain-1 [Sheet]
FILE NAME: \\hrgreen.com\hrg\Data\2020\201569\CAD\Sheets\201569-sht-sch-drain.dgn

HRGreen.com
Illinois Professional Design Firm # 184-001322
HRGreen

USER NAME = jhorwitt	DESIGNED -	REVISED -	
	DRAWN - BJB	REVISED -	
PLOT SCALE = 0.16666633 ' / in.	CHECKED -	REVISED -	
PLOT DATE = 6/12/2025	DATE - 6/12/2025	REVISED -	

STATE OF ILLINOIS - DEPARTMENT OF TRANSPORTATION

DRAINAGE PLAN AND PROFILE SCHEDULES
L.W. BESINGER DRIVE

SCALE: SHEET 4 OF 4 SHEETS STA. TO STA.

F.A.U. RTE.	SECTION	COUNTY	TOTAL SHEETS	SHEET NO.
4006	22-00094-00-FP	KANE	105	43
		CONTRACT NO. 61L58		
	ILLINOIS	FED. AID PROJECT		

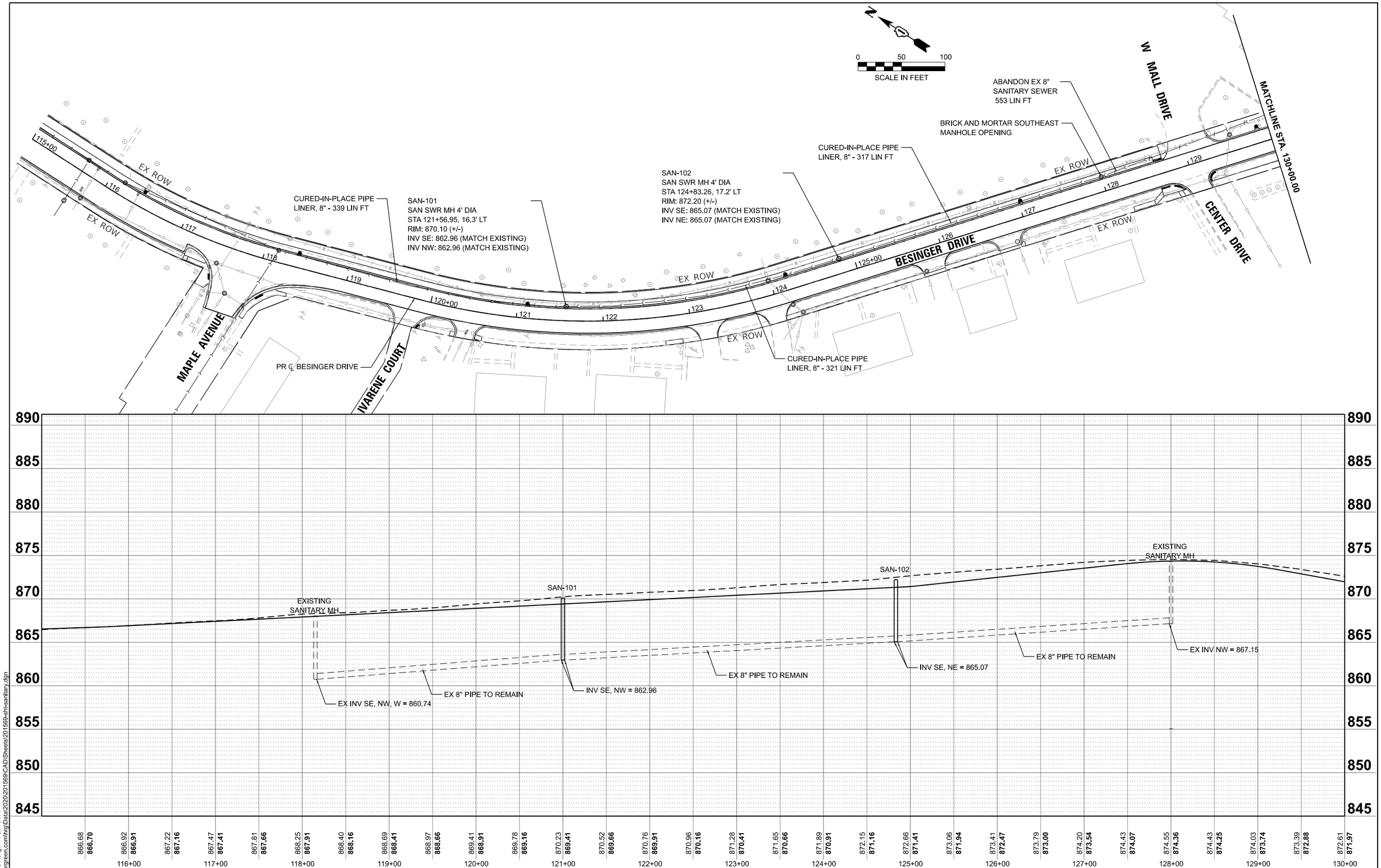

MODEL: PrCL-Besinger - Plan Sht 1
FILE NAME: \\hrgreen.com\hrg\Data\2020\201569\CAD\Sheets\201569-sht-sanitary.dgn

HRGreen.com
Illinois Professional Design Firm # 184-001322
HRGreen®

USER NAME = jhorwit	DESIGNED -	REVISED -	
	DRAWN - BJB	REVISED -	
PLOT SCALE = 0.16666633 ' / in.	CHECKED -	REVISED -	
PLOT DATE = 6/12/2025	DATE - 6/12/2025	REVISED -	

STATE OF ILLINOIS - DEPARTMENT OF TRANSPORTATION

SANITARY PLANS
L.W. BESINGER DRIVE

SCALE:1"=50' | SHEET 1 OF 2 SHEETS | STA. 115+00.00 TO STA. 130+00.00

F.A.U. RTE.	SECTION	COUNTY	TOTAL SHEETS	SHEET NO.
4006	22-00094-00-FP	KANE	105	44

CONTRACT NO. 61L58

ILLINOIS | FED. AID PROJECT

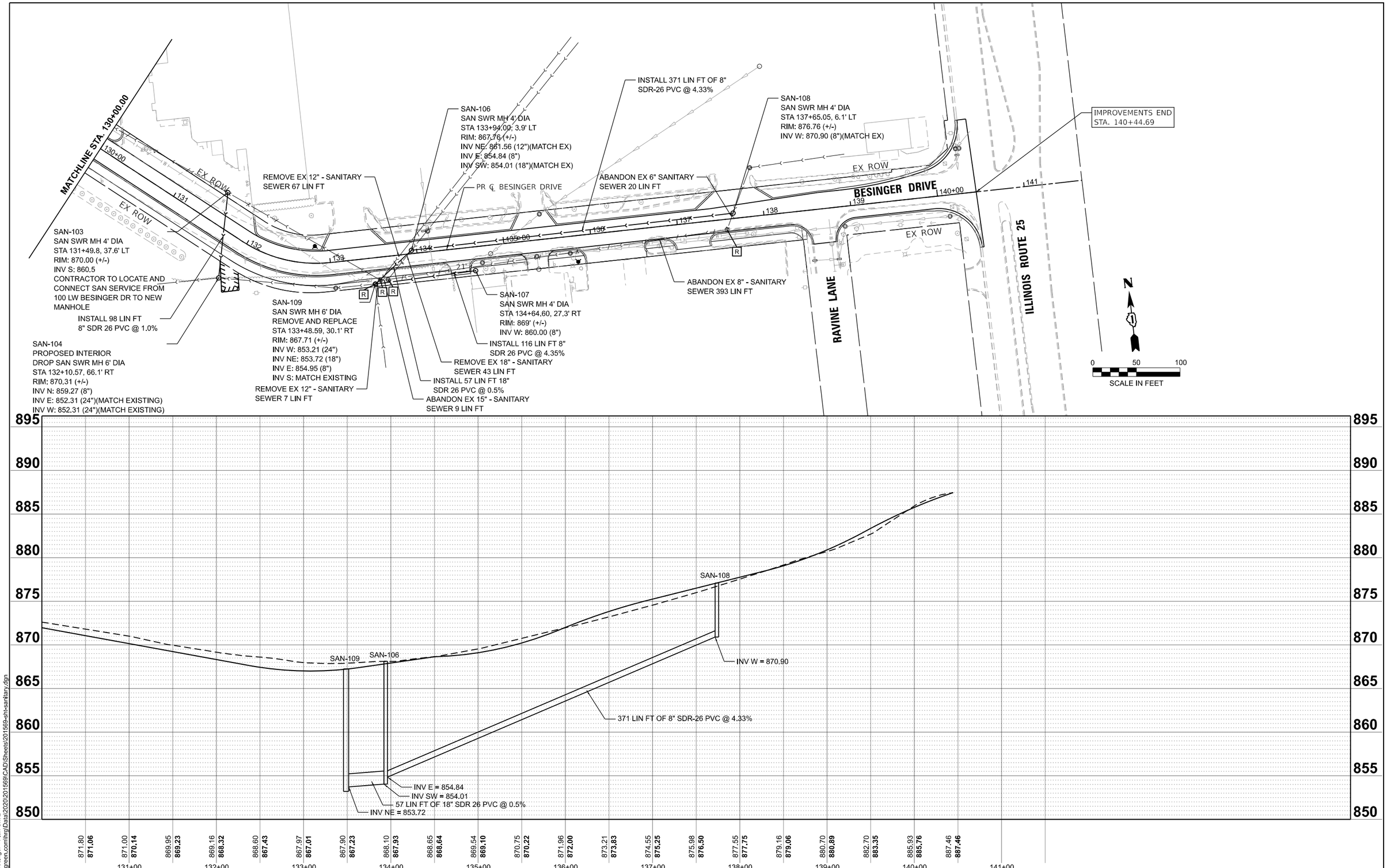

MODEL: PrCL-Besinger - Plan Sht 2
FILE NAME: \\hrgreen.com\hrg\Data\2020\201569\CAD\Sheets\201569-sht-sanitary.dgn

HRGreen.com
Illinois Professional Design Firm
184-001322
HRGreen®

USER NAME = jhorwit	DESIGNED -	REVISED -	
	DRAWN - BJB	REVISED -	
PLOT SCALE = 0.16666633 ' / in.	CHECKED -	REVISED -	
PLOT DATE = 6/12/2025	DATE - 6/12/2025	REVISED -	

STATE OF ILLINOIS - DEPARTMENT OF TRANSPORTATION

SANITARY PLANS
L.W. BESINGER DRIVE

SCALE: 1"=50' | SHEET 2 OF 2 SHEETS | STA. 130+00.00 TO STA. 145+00.00

F.A.U. RTE.	SECTION	COUNTY	TOTAL SHEETS	SHEET NO.
4006	22-00094-00-FP	KANE	105	45
		CONTRACT NO. 61L58		
		ILLINOIS	FED. AID PROJECT	

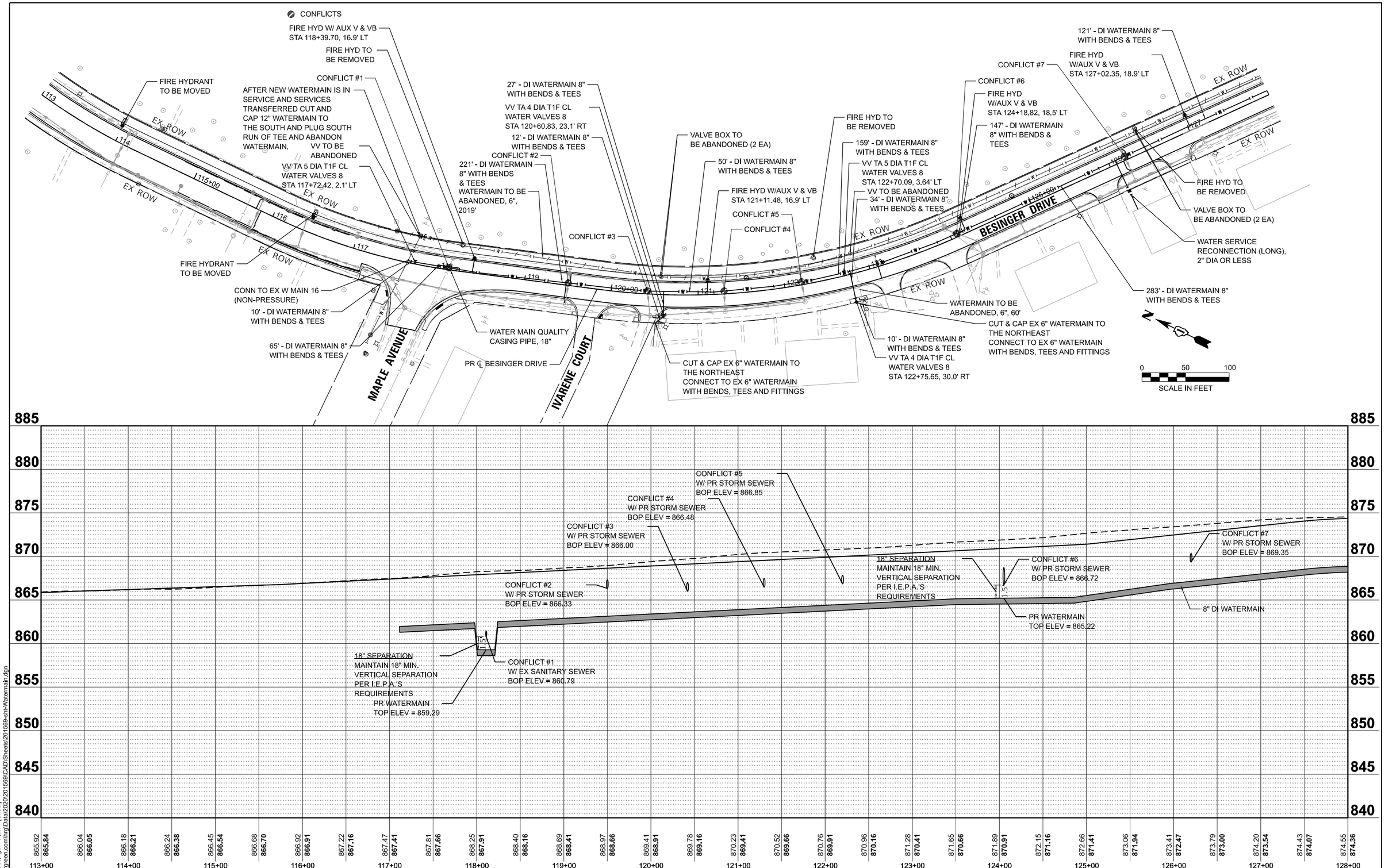

MODEL: PrCL-Besinger - Plan 1 [Sheet]
FILE NAME: \\hrgreen.com\hrg\Data\2020\201569\CAD\Sheets\201569-sht-Watermain.dgn

HRGreen.com
Illinois Professional Design Firm
184-001322

USER NAME = jhorwit	DESIGNED -	REVISED -	
	DRAWN - BJB	REVISED -	
PLOT SCALE = 0.16666633 ' / in.	CHECKED -	REVISED -	
PLOT DATE = 6/12/2025	DATE - 6/12/2025	REVISED -	

STATE OF ILLINOIS - DEPARTMENT OF TRANSPORTATION

WATERMAIN PLANS
L.W. BESINGER DRIVE

SCALE:1"=50' | SHEET 1 OF 2 SHEETS | STA. 113+00.00 TO STA. 128+00.00

F.A.U. RTE.	SECTION	COUNTY	TOTAL SHEETS	SHEET NO.
4006	22-00094-00-FP	KANE	105	46
		CONTRACT NO. 61L58		
		ILLINOIS	FED. AID PROJECT	

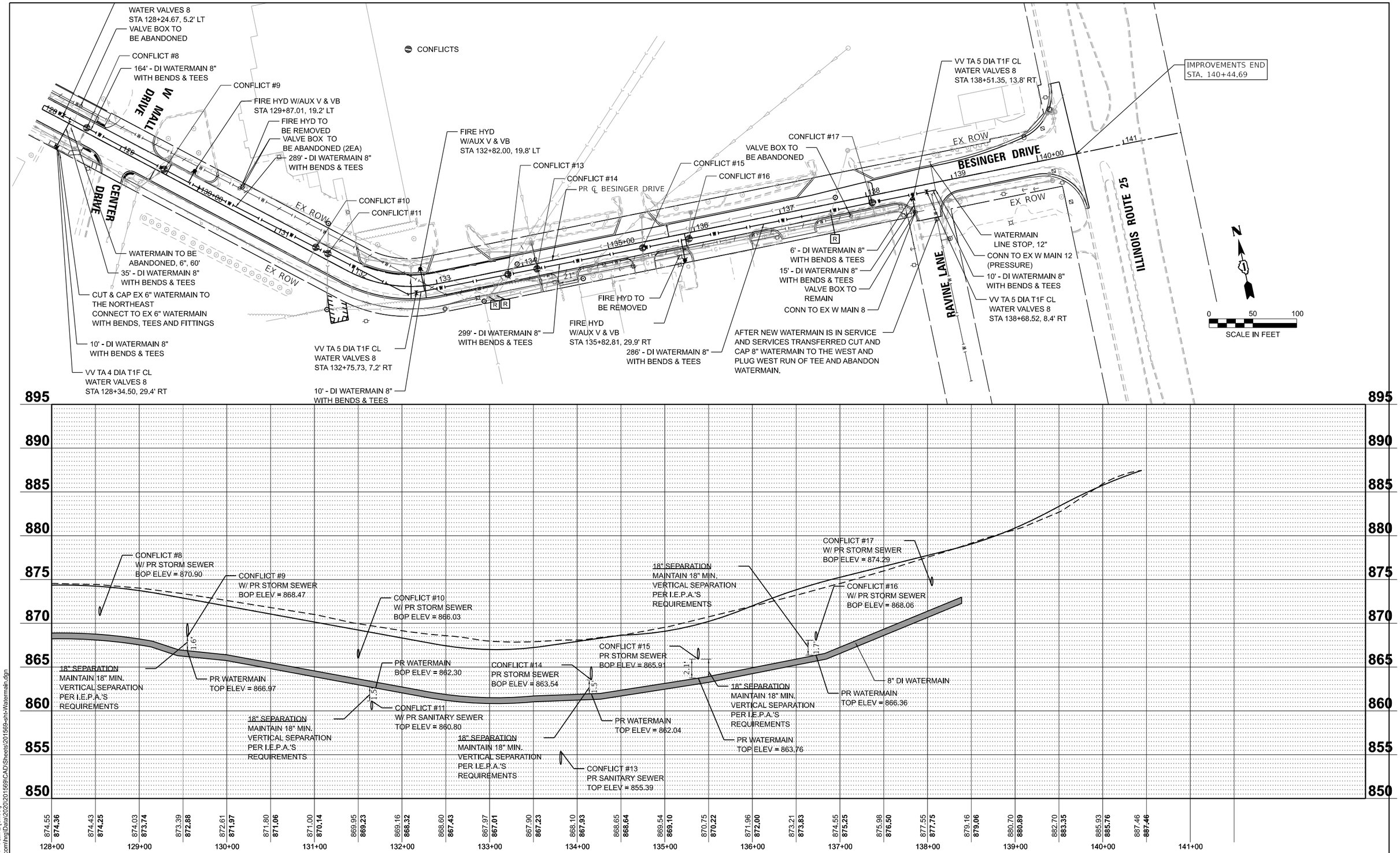

MODEL: PrCL-Besinger - Plan 2 [Sheet]
FILE NAME: \\hrgreen.com\hrg\Data\2020\201569\CAD\Sheets\201569-sht-Watermain.dgn

HRGreen.com
Illinois Professional Design Firm
184-001322

USER NAME = jhorwit	DESIGNED -	REVISED -	
	DRAWN - BJB	REVISED -	
PLOT SCALE = 0.16666633 ' / in.	CHECKED -	REVISED -	
PLOT DATE = 6/12/2025	DATE - 6/12/2025	REVISED -	

STATE OF ILLINOIS - DEPARTMENT OF TRANSPORTATION

WATERMAIN PLANS
L.W. BESINGER DRIVE

SCALE: 1"=50' | SHEET 2 OF 2 SHEETS | STA. 128+00.00 TO STA. 143+00.00

F.A.U. RTE.	SECTION	COUNTY	TOTAL SHEETS	SHEET NO.
4006	22-00094-00-FP	KANE	105	47
		CONTRACT NO. 61L58		
		ILLINOIS	FED. AID PROJECT	

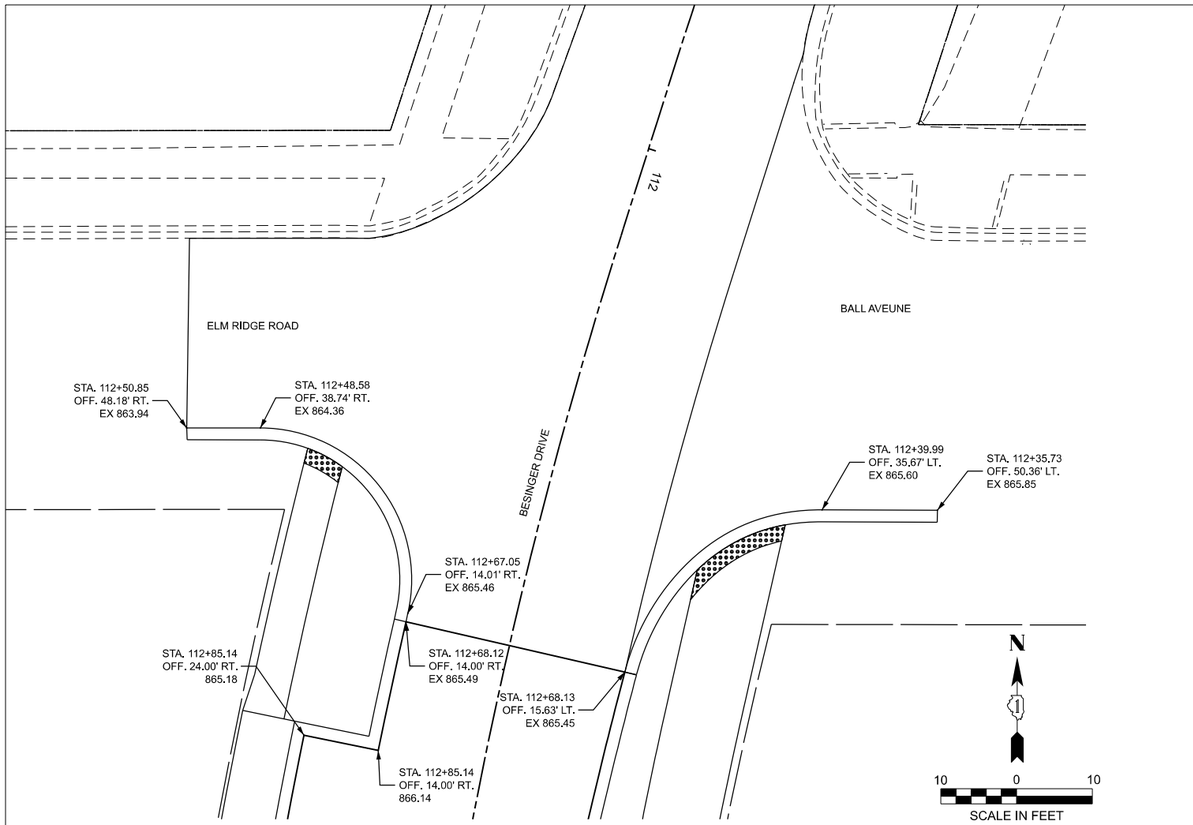

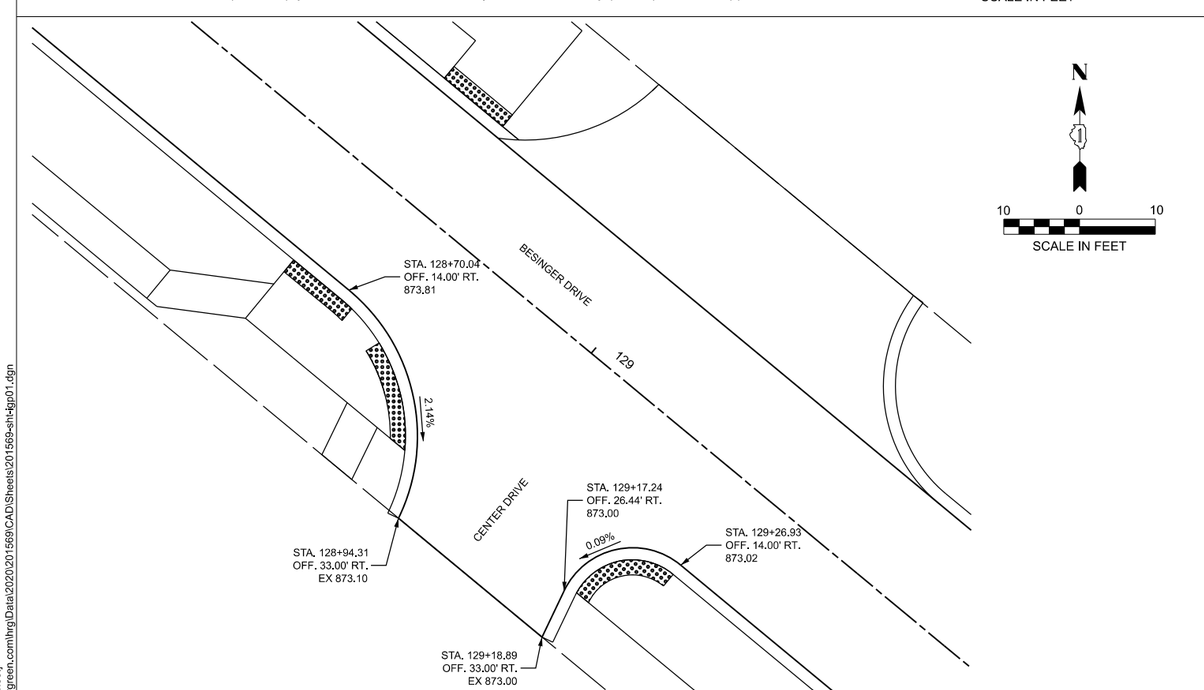

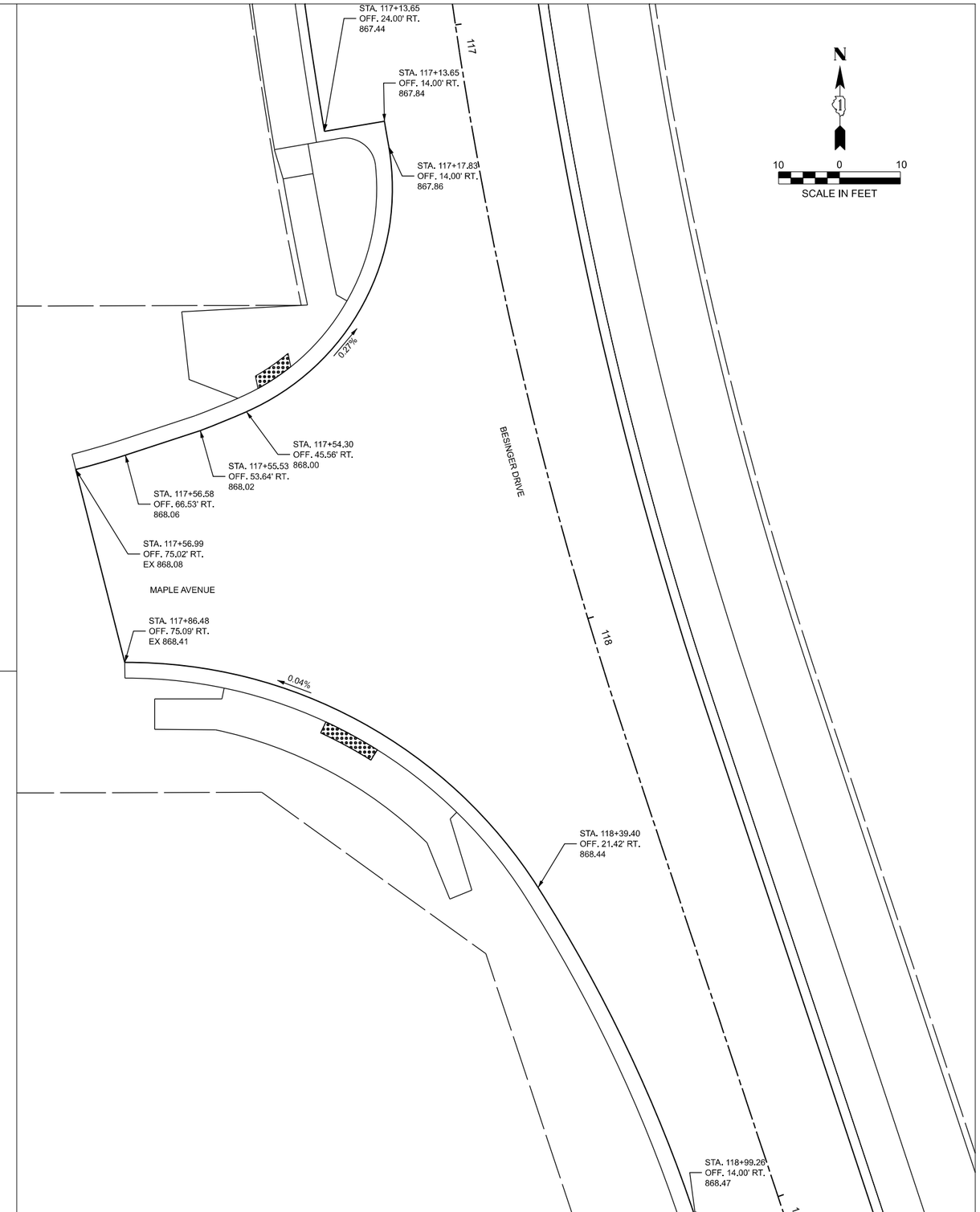

MODEL: IGP [Sheet]
FILE NAME: \\hrgreen.com\hrg\Data\2020\201569\CAD\Sheets\201569-sht-igp01.dgn

HRGreen.com
Illinois Professional Design Firm
184-001322
HRGreen

USER NAME = jhorwitt	DESIGNED -	REVISED -	
	DRAWN - JCH	REVISED -	
PLOT SCALE = 0.16666633 ' / in.	CHECKED -	REVISED -	
PLOT DATE = 6/12/2025	DATE - 6/12/2025	REVISED -	

STATE OF ILLINOIS - DEPARTMENT OF TRANSPORTATION

INTERSECTION GRADING PLAN
L.W. BESINGER DRIVE

SCALE: | SHEET 1 OF 2 SHEETS | STA. | TO STA.

F.A.U. RTE.	SECTION	COUNTY	TOTAL SHEETS	SHEET NO.
4006	22-00094-00-FP	KANE	105	48
		CONTRACT NO. 61L58		
		ILLINOIS	FED. AID PROJECT	

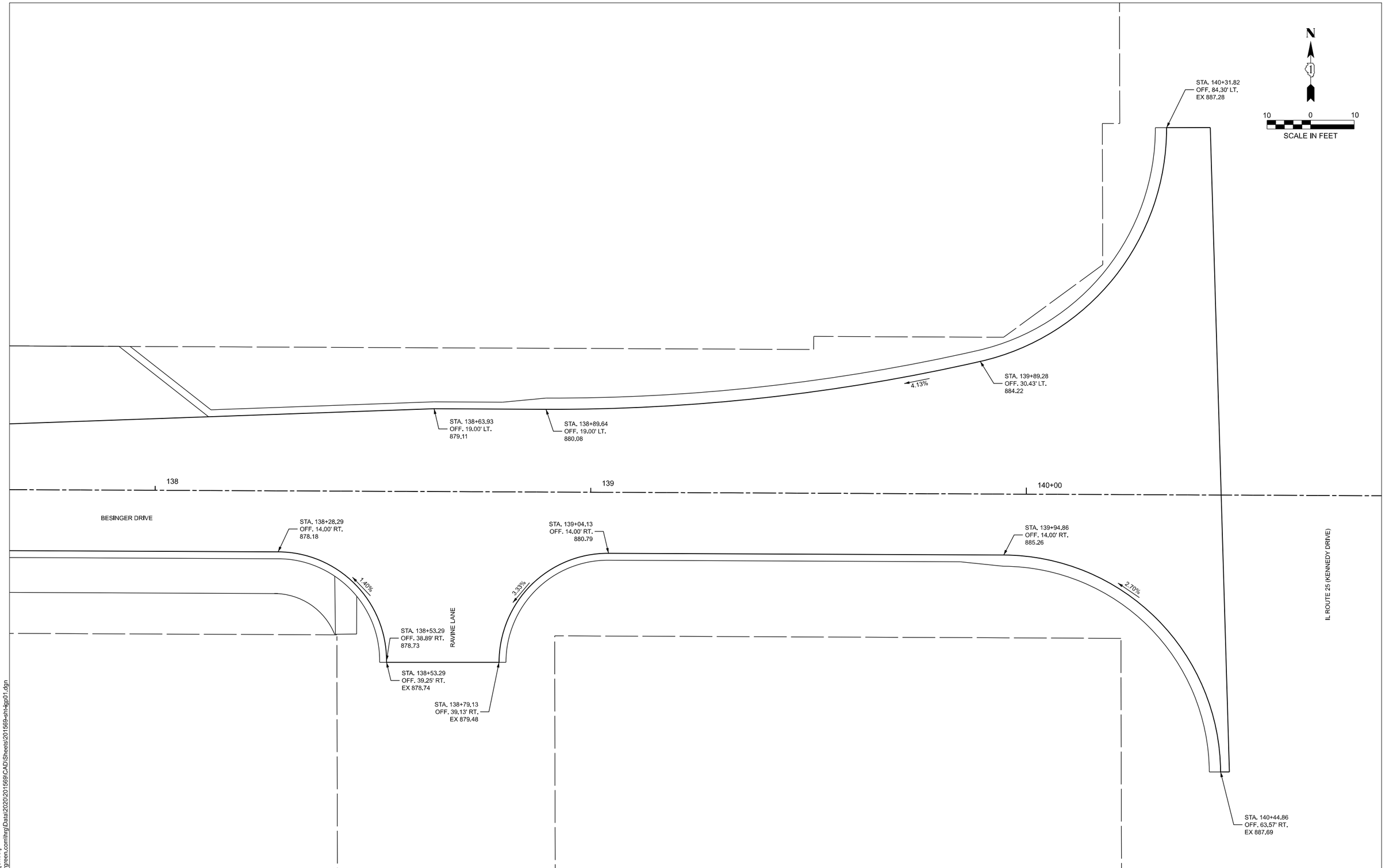

MODEL: IGP-2 [Sheet]
FILE NAME: \\hrgreen.com\hrg\Data\2020\201569\CAD\Sheets\201569-sht-igp01.dgn

HRGreen.com
Illinois Professional Design Firm
184-001322
HRGreen.

USER NAME = jhorwit	DESIGNED -	REVISED -	
	DRAWN - JCH	REVISED -	
PLOT SCALE = 0.16666633 ' / in.	CHECKED -	REVISED -	
PLOT DATE = 6/12/2025	DATE - 6/12/2025	REVISED -	

STATE OF ILLINOIS - DEPARTMENT OF TRANSPORTATION

INTERSECTION GRADING PLAN
L.W. BESINGER DRIVE

SCALE: | SHEET 2 OF 2 SHEETS | STA. | TO STA.

F.A.U. RTE.	SECTION	COUNTY	TOTAL SHEETS	SHEET NO.
4006	22-00094-00-FP	KANE	105	49

CONTRACT NO. 61L58

ILLINOIS | FED. AID PROJECT

STATION SUMMARY

PC (ENTERING CURVE)			
STATION	LEFT SIDE	RIGHT SIDE	
112+68.12	-2.00%	0.00%	NORMAL CROWN AND 0%
114+11.00	-2.60%	2.60%	FULL SUPER

PT (EXITING CURVE)			
STATION	LEFT SIDE	RIGHT SIDE	
114+11.00	-2.60%	2.60%	FULL SUPER
114+21.00	-2.00%	2.00%	NORMAL CROWN AND REVERSE CROWN
114+56.00	-2.00%	0.00%	NORMAL CROWN AND 0%
114+91.00	-2.00%	-2.00%	NORMAL CROWN

PC (ENTERING CURVE)			
STATION	LEFT SIDE	RIGHT SIDE	
115+36.00	-2.00%	-2.00%	NORMAL CROWN
115+71.00	-2.00%	0.00%	NORMAL CROWN AND 0%
116+06.00	-2.00%	2.00%	NORMAL CROWN AND REVERSE CROWN
116+16.00	-2.60%	2.60%	FULL SUPER

PT (EXITING CURVE)			
STATION	LEFT SIDE	RIGHT SIDE	
118+05.00	-2.60%	2.60%	FULL SUPER
118+15.00	-2.00%	2.00%	NORMAL CROWN AND REVERSE CROWN
118+50.00	-2.00%	0.00%	NORMAL CROWN AND 0%
118+85.00	-2.00%	-2.00%	NORMAL CROWN

PC (ENTERING CURVE)			
STATION	LEFT SIDE	RIGHT SIDE	
119+21.00	-2.00%	-2.00%	NORMAL CROWN
119+56.00	-2.00%	0.00%	NORMAL CROWN AND 0%
119+91.00	-2.00%	2.00%	NORMAL CROWN AND REVERSE CROWN
120+01.00	-2.60%	2.60%	FULL SUPER

PT (EXITING CURVE)			
STATION	LEFT SIDE	RIGHT SIDE	
123+98.00	-2.60%	2.60%	FULL SUPER
124+08.00	-2.00%	2.00%	NORMAL CROWN AND REVERSE CROWN
124+43.00	-2.00%	0.00%	NORMAL CROWN AND 0%
124+78.00	-2.00%	-2.00%	NORMAL CROWN

PC (ENTERING CURVE)			
STATION	LEFT SIDE	RIGHT SIDE	
131+13.50	-2.00%	-2.00%	NORMAL CROWN
131+48.00	-2.00%	0.00%	NORMAL CROWN AND 0%
131+82.50	-2.00%	2.00%	NORMAL CROWN AND REVERSE CROWN
132+17.00	-4.00%	4.00%	FULL SUPER

PT (EXITING CURVE)			
STATION	LEFT SIDE	RIGHT SIDE	
132+78.00	-4.00%	4.00%	FULL SUPER
133+12.50	-2.00%	2.00%	NORMAL CROWN AND REVERSE CROWN
133+47.00	-2.00%	0.00%	NORMAL CROWN AND 0%
133+81.50	-2.00%	-2.00%	NORMAL CROWN

MODEL: Superelevation Table [Sheet]
FILE NAME: \\hrgreen.com\hrg\Data\2020\2015\69\CAD\Sheets\201569-sht-tgp01.dgn

HRGreen.com
Illinois Professional Design Firm
184-001322

USER NAME = jhorwit	DESIGNED -	REVISED -	STATE OF ILLINOIS - DEPARTMENT OF TRANSPORTATION
	DRAWN - JCH	REVISED -	
PLOT SCALE = 0.16666633 ' / in.	CHECKED -	REVISED -	
PLOT DATE = 6/12/2025	DATE - 6/12/2025	REVISED -	

SUPERELEVATION TABLE

SCALE: SHEET 1 OF 1 SHEETS STA. TO STA.

F.A.U. RTE.	SECTION	COUNTY	TOTAL SHEETS	SHEET NO.
4006	22-00094-00-FP	KANE	105	50

CONTRACT NO. 61L58

ILLINOIS FED. AID PROJECT

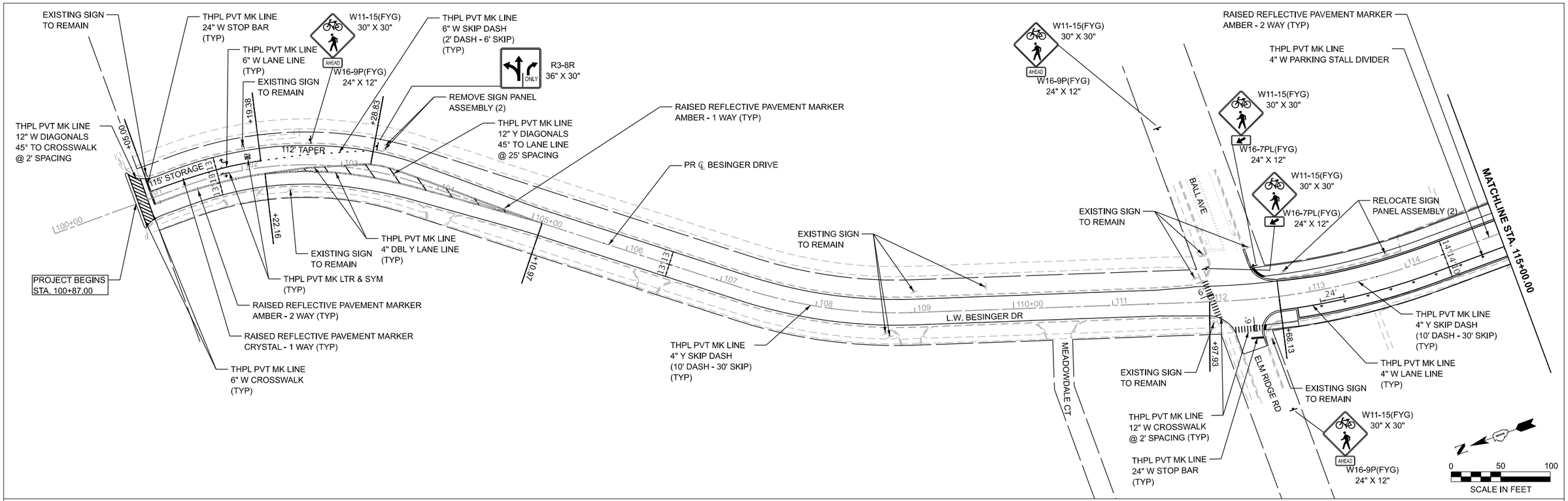

MODEL: pmk-1 [Sheet]
FILE NAME: 201569-sht-pmk.dgn

HRGreen.com
Illinois Professional Design Firm # 184-001322

USER NAME = jhorwit	DESIGNED -	REVISED -	
	DRAWN - BJB	REVISED -	
PLOT SCALE = 0.16666633 ' / in.	CHECKED -	REVISED -	
PLOT DATE = 6/12/2025	DATE - 6/12/2025	REVISED -	

STATE OF ILLINOIS - DEPARTMENT OF TRANSPORTATION

PAVEMENT MARKING AND SIGNING PLAN
L.W. BESINGER DRIVE

SCALE: 1"=50' | SHEET 1 OF 2 SHEETS | STA. 100+00.00 TO STA. 130+00.00

F.A.U. RTE.	SECTION	COUNTY	TOTAL SHEETS	SHEET NO.
4006	22-00094-00-FP	KANE	105	51
		CONTRACT NO. 61L58		
		ILLINOIS	FED. AID PROJECT	

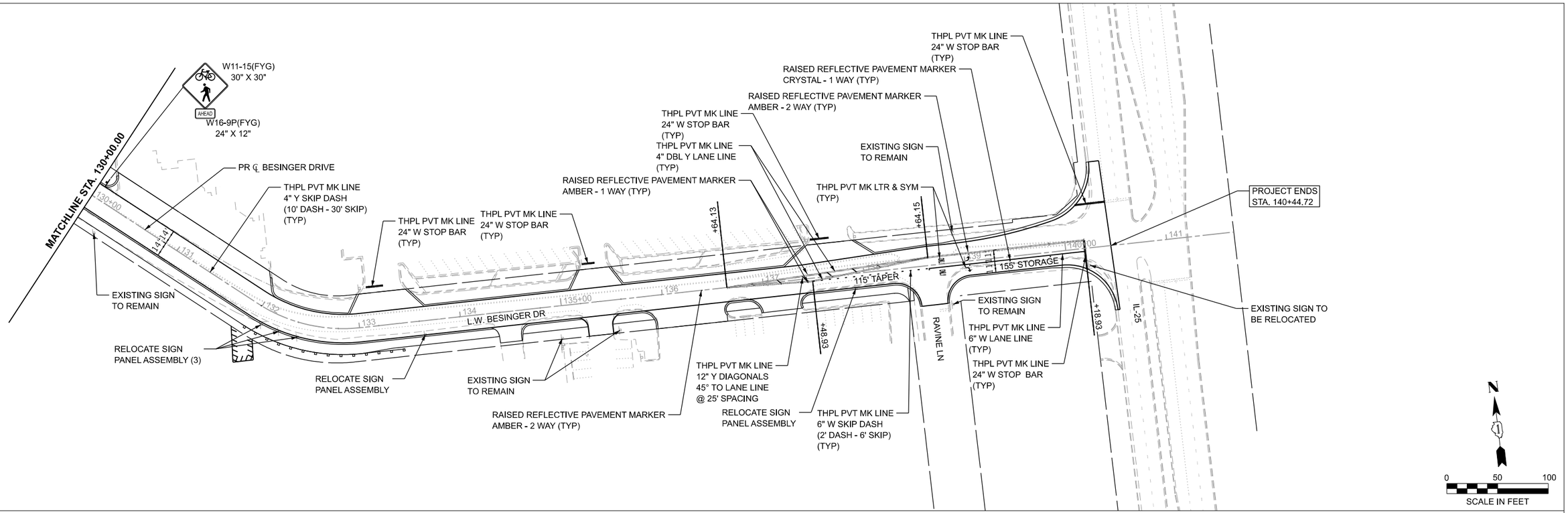

MODEL: pmk-2 [Sheet]
FILE NAME: 201569-sht-pmk.dgn

HRGreen.com
Illinois Professional Design Firm
184-001322

USER NAME = jhorwit	DESIGNED -	REVISED -	STATE OF ILLINOIS - DEPARTMENT OF TRANSPORTATION
	DRAWN - BJB	REVISED -	
PLOT SCALE = 0.16666633 ' / in.	CHECKED -	REVISED -	
PLOT DATE = 6/12/2025	DATE - 6/12/2025	REVISED -	

PAVEMENT MARKING AND SIGNING PLAN
L.W. BESINGER DRIVE

SCALE: 1"=50' | SHEET 2 OF 2 SHEETS | STA. 130+00.00 TO STA. 145+00.00

F.A.U. RTE.	SECTION	COUNTY	TOTAL SHEETS	SHEET NO.
4006	22-00094-00-FP	KANE	105	52
		CONTRACT NO. 61L58		
	ILLINOIS	FED. AID PROJECT		

TRAFFIC SIGNAL LEGEND

(NOT TO SCALE)

ITEM	EXISTING	PROPOSED
CONTROLLER CABINET		
COMMUNICATION CABINET	CC	CC
MASTER CONTROLLER	MC	MC
MASTER MASTER CONTROLLER	MMC	MMC
UNINTERRUPTABLE POWER SUPPLY		
SERVICE INSTALLATION -(P) POLE MOUNTED	P	P
SERVICE INSTALLATION -(G) GROUND MOUNTED -(GM) GROUND MOUNTED METERED	G GM	G GM
TELEPHONE CONNECTION	ET	T
STEEL MAST ARM ASSEMBLY AND POLE		
ALUMINUM MAST ARM ASSEMBLY AND POLE		
STEEL COMBINATION MAST ARM ASSEMBLY AND POLE WITH LUMINAIRE		
SIGNAL POST -(BM) BARREL MOUNTED - TEMPORARY		BM
WOOD POLE		
GUY WIRE		
SIGNAL HEAD		
SIGNAL HEAD WITH BACKPLATE		
SIGNAL HEAD OPTICALLY PROGRAMMED	P P	P P
FLASHER INSTALLATION -(FS) SOLAR POWERED	F FS F FS	F FS F FS
PEDESTRIAN SIGNAL HEAD		
PEDESTRIAN PUSH BUTTON -(APS) ACCESSIBLE PEDESTRIAN PUSH BUTTON	APS	APS
RADAR DETECTION SENSOR	R	R
VIDEO DETECTION CAMERA	V	V
RADAR/VIDEO DETECTION ZONE		
PAN, TILT, ZOOM (PTZ) CAMERA	PTZ	PTZ
EMERGENCY VEHICLE LIGHT DETECTOR		
CONFIMATION BEACON		
WIRELESS INTERCONNECT		
WIRELESS INTERCONNECT RADIO REPEATER	RR	RR

ITEM	EXISTING	PROPOSED
HANDHOLE -SQUARE -ROUND		
HEAVY DUTY HANDHOLE -SQUARE -ROUND	H	H
DOUBLE HANDHOLE		
JUNCTION BOX		
RAILROAD CANTILEVER MAST ARM		
RAILROAD FLASHING SIGNAL		
RAILROAD CROSSING GATE		
RAILROAD CROSSBUCK		
RAILROAD CONTROLLER CABINET		
UNDERGROUND CONDUIT (UC), GALVANIZED STEEL		
TEMPORARY SPAN WIRE, TETHER WIRE, AND CABLE		
SYSTEM ITEM	S	SP
INTERSECTION ITEM	I	IP
REMOVE ITEM		R
RELOCATE ITEM		RL
ABANDON ITEM		A
CONTROLLER CABINET AND FOUNDATION TO BE REMOVED		RCF
MAST ARM POLE AND FOUNDATION TO BE REMOVED		RMF
SIGNAL POST AND FOUNDATION TO BE REMOVED		RPF
DETECTOR LOOP, TYPE I		
PREFORMED DETECTOR LOOP	P P	P P
SAMPLING (SYSTEM) DETECTOR	S S	S S
INTERSECTION AND SAMPLING (SYSTEM) DETECTOR	IS IS	IS IS
QUEUE AND SAMPLING (SYSTEM) DETECTOR	QS QS	QS QS
WIRELESS DETECTOR SENSOR	W	W
WIRELESS ACCESS POINT		

ITEM	EXISTING	PROPOSED
SIGNAL HEAD -(P) PROGRAMMABLE SIGNAL HEAD	R Y G Y G P	R Y G Y G P
SIGNAL HEAD WITH BACKPLATE -(P) PROGRAMMABLE SIGNAL HEAD -(RB) RETROREFLECTIVE BACKPLATE	R Y G Y G P RB	R Y G Y G P RB
PEDESTRIAN SIGNAL HEAD AT RAILROAD INTERSECTIONS		
PEDESTRIAN SIGNAL HEAD WITH COUNTDOWN TIMER	C D	C D
ILLUMINATED SIGN "NO LEFT TURN"/"NO RIGHT TURN"		
NUMBER OF CONDUCTORS, ELECTRIC CABLE NO. 14, UNLESS NOTED OTHERWISE. ALL DETECTOR LOOP CABLE TO BE SHIELDED	5	5
GROUND CABLE IN CONDUIT, NO. 6 SOLID COPPER (GREEN)	1#6	1#6
ELECTRIC CABLE IN CONDUIT, TRACER NO. 14 1/C	1	1
COAXIAL CABLE	C	C
VENDOR CABLE	V	V
COPPER INTERCONNECT CABLE, NO. 18, 3 PAIR TWISTED, SHIELDED	6#18	6#18
FIBER OPTIC CABLE -NO. 62.5/125, MM12F -NO. 62.5/125, MM12F SM12F -NO. 62.5/125, MM12F SM24F	12F 24F 36F	12F 24F 36F
GROUND ROD -(C) CONTROLLER -(M) MAST ARM -(P) POST -(S) SERVICE	C M P S	C M P S

MODEL: Default
FILE NAME: pw:\\IL084EBIDINTEG.illinois.gov:PWIDOT\Documents\IDOT Offices\District 1\Projects\DistStd22x34\CADData\CADsheets\ts05.dgn

HRGreen.com
Illinois Professional Design Firm # 184-001322

USER NAME = footemj	DESIGNED - IP	REVISED -	
	DRAWN - IP	REVISED -	
PLOT SCALE = 50.0000 ' / in.	CHECKED - LP	REVISED -	
PLOT DATE = 3/4/2019	DATE - 9/29/2016	REVISED -	

STATE OF ILLINOIS
DEPARTMENT OF TRANSPORTATION

DISTRICT ONE
STANDARD TRAFFIC SIGNAL DESIGN DETAILS

SCALE: NONE | SHEET 1 OF 7 SHEETS | STA. TO STA.

F.A.U. RTE.	SECTION	COUNTY	TOTAL SHEETS	SHEET NO.
4006	22-00094-00-FP	KANE	105	53
	TS–05	CONTRACT NO. 61L58		
		ILLINOIS	FED. AID PROJECT	

ts05.dgn 3/4/2019 11:21:50 AM User=footemj

LOOP DETECTOR NOTES

1. EACH PAIR OF LOOP WIRES SHALL BE PLACED IN A SEPARATE EMPTY COILABLE NONMETALLIC CONDUIT FROM THE EDGE OF PAVEMENT TO THE HANDHOLE. SPACING BETWEEN THE HOLES DRILLED IN THE PAVEMENT SHALL NOT BE LESS THAN 6" (150 mm). EMPTY COILABLE NONMETALLIC CONDUIT SHALL BE INCLUDED IN THE COST OF THE LOOP WIRE.

2. THE NUMBER OF LOOP TURNS SHALL BE AS RECOMMENDED BY THE AMPLIFIER MANUFACTURER. ALL ADJACENT SIDES OF THE LOOPS SHALL BE INSTALLED IN SUCH A WAY THAT THE CURRENT FLOW IS IN THE SAME DIRECTION TO REINFORCE ITS MAGNETIC FIELDS FOR SMALL VEHICLE DETECTION.

3. EACH LOOP LEAD-IN SHALL BE IDENTIFIED AND PERMANENTLY TAGGED IN THE HANDHOLE. EACH LEAD-IN CABLE TAG SHALL INDICATE THE LOCATION OF THE LOOP, LOOP ROTATION (CLOCKWISE/COUNTERCLOCKWISE), LOOP LEAD-IN DIRECTION (IN OR OUT), LOOP CABLE NUMBER AND LOCATION IN CABINET, AND NUMBER OF TURNS IN THE DETECTOR LOOPS IN WATER PROOF INK AS INDICATED ON THE DISTRICT 1 STANDARD TRAFFIC SIGNAL DESIGN DETAIL. THE CONTRACTOR SHALL MARK LOOP LOCATIONS ON RECORD DRAWINGS AND PRESENT TO THE ENGINEER AFTER FINAL INSPECTION. LOOPS SHALL BE MARKED BY LANE AND LOOP NUMBER. SEE DETAIL BELOW.

4. ALL LOOP CABLE SHALL BE FASTENED WITH PLASTIC TIE WRAP TO THE HANDHOLE HOOKS.

5. IN ASPHALT PAVEMENT, LOOPS SHOULD BE PLACED IN THE BINDER AND DIVEHOLES MARKED AT THE CURB WITH A SAW-CUT. THE SAW-CUT SHALL BE CUT IN ACCORDANCE WITH LOCAL AND E.P.A. DUST CONTROL REQUIREMENTS. DETECTOR LOOP(S) SHALL NOT BE INSTALLED IN WET CONDITIONS AND THE SAW-CUTS MUST BE FREE OF DEBRIS AND RESIDUE SUCH AS DUST AND WATER WHICH IS TO BE ACHIEVED BY THE USE OF COMPRESSED AIR, WIRE BRUSHING AND HEAT DRYING ACCORDING TO SEALANT MANUFACTURER REQUIREMENTS. THE DETECTOR WIRE SHALL BE HELD IN PLACE BY THE USE OF FORM WEDGES. WEDGES SHALL BE SPACED NO MORE THAN 18" (450 mm) APART.

6. LOOP SPLICES SHALL BE SOLDERED USING A SOLDERING IRON. BLOW TORCHES OR OTHER DEVICES WHICH OXIDIZE COPPER CABLE SHALL NOT BE ALLOWED FOR SOLDERING OPERATIONS. SEE DETAIL BELOW RIGHT.

7. PREFORMED DETECTOR LOOPS SHALL BE USED, AS SHOWN ON THE PLANS, WHERE NEW CONCRETE PAVEMENT IS PROPOSED. THE INSTALLATION OF PREFORMED LOOPS SHALL BE IN ACCORDANCE WITH THE DISTRICT 1 SPECIFICATIONS OR AS DIRECTED BY THE ENGINEER.

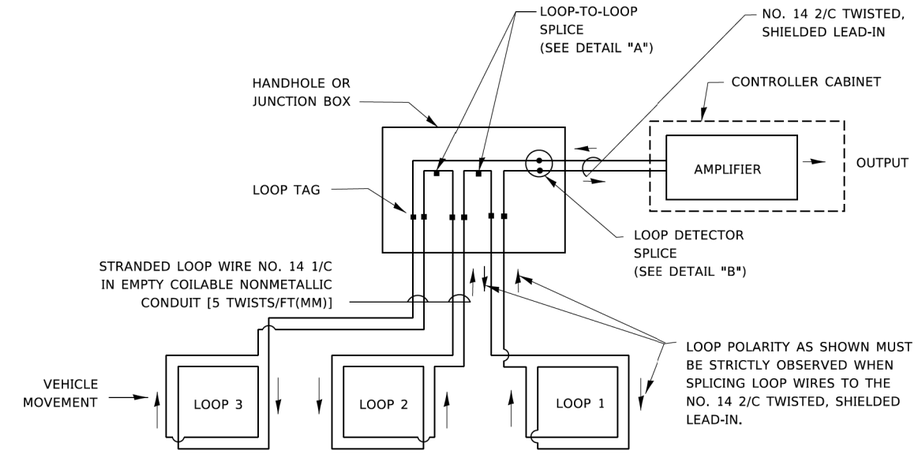

DETECTOR LOOP WIRING SCHEMATIC

- LOOPS SHALL BE SPLICED IN SERIES. SAW-CUTS SHALL BE A MINIMUM WIDTH OF 5/16" (8 mm).
- SAW-CUT DEPTHS SHALL BE 3" (75 mm). IF IN CONCRETE,
- THE SAW-CUT DEPTH SHALL BE TO THE TOP OF THE REINFORCEMENT.
- LOOP CORNERS SHALL BE DRILLED WITH A 2" (50 mm) DIAMETER CORE.

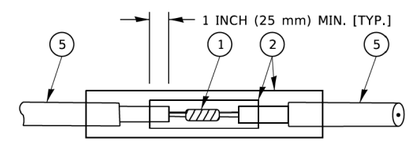

DETAIL "A"
LOOP-TO-LOOP SPLICE

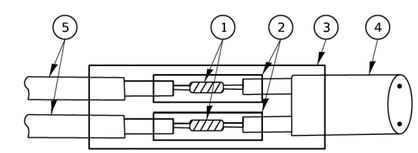

DETAIL "B"
LOOP-TO-CONTROLLER SPLICE

TYPE I LOOP

LOOP LEAD-IN CABLE TAG

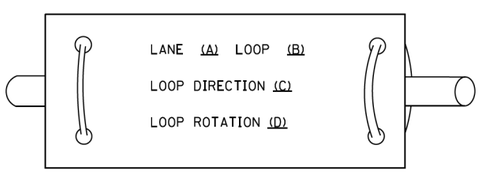

A. LANE 1 IS THE LANE CLOSEST TO THE CENTERLINE OF THE ROADWAY

B. LOOP #1 IS THE LOOP IN THE LANE CLOSEST TO THE INTERSECTION.

C. LABEL LOOP CABLE "IN" OR LOOP CABLE "OUT".

D. LABEL LOOP CABLE CLOCKWISE OR LOOP CABLE COUNTERCLOCKWISE.

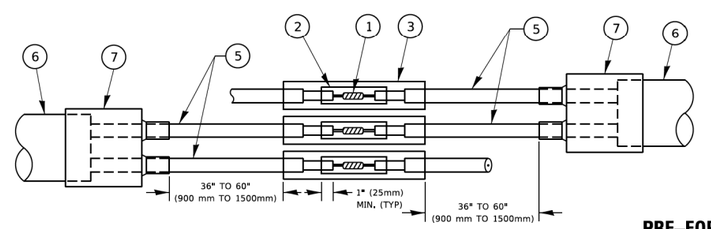

DETAIL "A"
LOOP-TO-LOOP SPLICE

PRE-FORMED LOOP

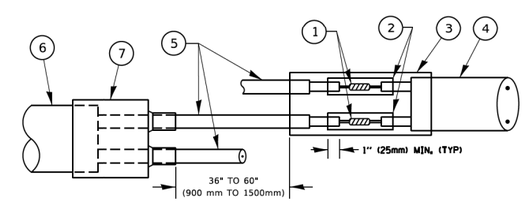

DETAIL "B"
LOOP-TO-CONTROLLER SPLICE

LOOP DETECTOR SPLICE

1. WESTERN UNION SPLICE SOLDERED WITH ROSIN CORE FLUX. ALL EXPOSED SURFACES OF THE SOLDER SHALL BE SMOOTH. THE WESTERN UNION SPLICES SHALL BE STAGGERED.
2. WCSMW 30/100 HEAT SHRINK TUBE, MINIMUM LENGTH 3" (75 mm), UNDERWATER GRADE.
3. WCS 200/750 HEAT SHRINK TUBE, MINIMUM LENGHT 6" (150 mm), UNDERWATER GRADE.
4. NO. 14 2/C TWISTED, SHIELDED CABLE.
5. LOOP CONDUCTOR WITH FLEXIBLE PLASTIC TUBE. PRE-FORMED LOOP
6. XL POLYOLEFIN 2 CONDUCTOR
7. BREAKOUT SEALS. TYCO CBR-2 OR APPROVED EQUAL

TRAFFIC SIGNAL MAST ARM AND SIGNAL POST

MAST ARM MOUNTED SIGNALS IN EXISTING, PROPOSED OR FUTURE SIDEWALK/BICYCLE PATH AREA. INTERSECTION SHOWN WITH PEDESTRIAN SIGNALS AND PEDESTRIAN PUSHBUTTON DETECTORS.

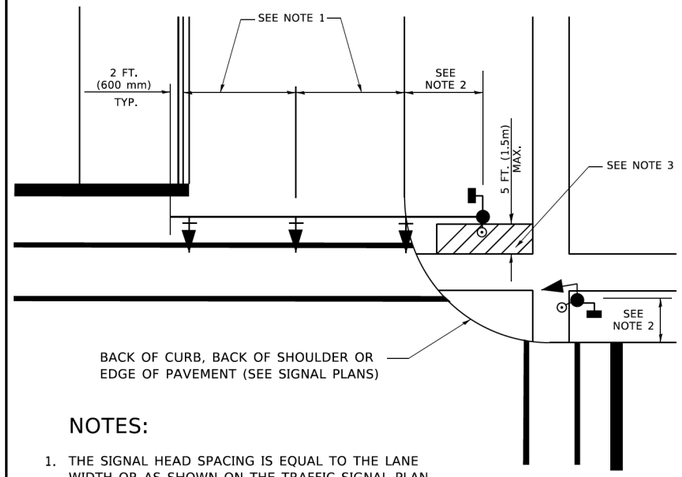

NOTES:

1. THE SIGNAL HEAD SPACING IS EQUAL TO THE LANE WIDTH OR AS SHOWN ON THE TRAFFIC SIGNAL PLAN.
2. REFER TO THE TRAFFIC SIGNAL EQUIPMENT OFFSET TABLE.
3. PROVIDE A LEVEL ALL-WEATHER SURFACE (CONCRETE SIDEWALK, ASPHALT BICYCLE PATH SURFACE OR MATCHING MATERIAL TO THE ADJACENT SURFACE) UP TO THE MAST ARM SHAFT OR THE SIGNAL POST.
4. THE FACE OF THE PEDESTRIAN PUSHBUTTON SHALL BE PARALLEL TO THE CROSSWALK TO BE USED.
5. THE LOCATIONS AND INSTALLATION OF PEDESTRIAN SIGNAL HEADS AND PEDESTRIAN PUSHBUTTONS SHALL MEET THE REQUIREMENTS OF THE MUTCD AND INFORMATION FOUND IN THE "AMERICANS WITH DISABILITIES ACT ACCESSIBILITY GUIDELINES FOR BUILDINGS AND FACILITIES."

PEDESTRIAN SIGNAL POST AND PEDESTRIAN PUSH BUTTON POST

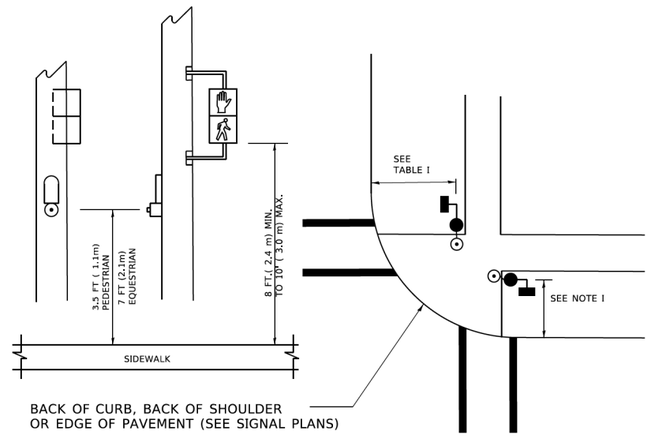

NOTES:

1. REFER TO THE TRAFFIC SIGNAL EQUIPMENT OFFSET TABLE.
2. PROVIDE A LEVEL ALL-WEATHER SURFACE (CONCRETE SIDEWALK, ASPHALT BICYCLE PATH SURFACE OR MATCHING MATERIAL TO THE ADJACENT SURFACE) UP TO THE PEDESTRIAN SIGNAL POST OR THE PEDESTRIAN PUSH BUTTON POST.
3. THE FACE OF THE PEDESTRIAN PUSHBUTTON SHALL BE PARALLEL TO THE CROSSWALK TO BE USED.
4. THE LOCATIONS AND INSTALLATION OF PEDESTRIAN SIGNAL HEADS AND PEDESTRIAN PUSHBUTTONS SHALL MEET THE REQUIREMENTS OF THE MUTCD AND INFORMATION FOUND IN THE "AMERICANS WITH DISABILITIES ACT ACCESSIBILITY GUIDELINES FOR BUILDINGS AND FACILITIES."

RECOMMENDED PUSHBUTTON LOCATIONS

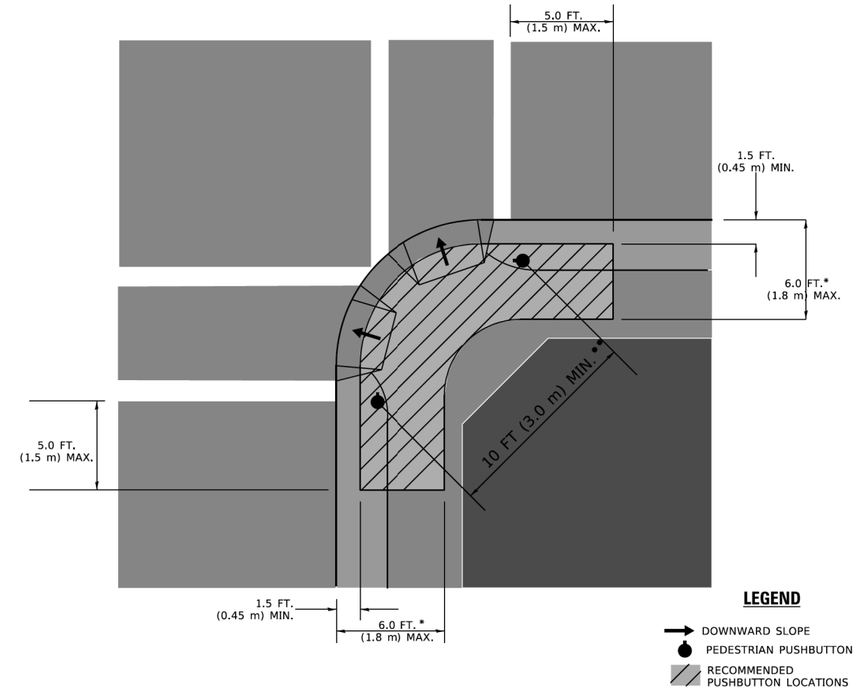

* WHERE THERE ARE CONSTRAINTS THAT MAKE IT IMPRACTICAL TO PLACE THE PEDESTRIAN PUSHBUTTON BETWEEN 1.5 FT (0.45 m) AND 6 FT (1.8 m) FROM THE EDGE OF THE CURB, SHOULDER, OR PAVEMENT, IT SHOULD NOT BE FURTHER THAN 10 FT (3 m) FROM THE EDGE OF CURB, SHOULDER, OR PAVEMENT.

** WHERE THERE ARE CONSTRAINTS ON A PARTICULAR CORNER THAT MAKE IT IMPRACTICAL TO PROVIDE THE 10 FT (3 m) SEPERATION BETWEEN THE TWO PEDESTRIAN PUSHBUTTONS, THE PUSHBUTTONS MAY BE PLACED CLOSER TOGETHER OR ON THE SAME POLE.

NOTES:

1. PEDESTRIAN SIGNAL HEADS SHALL BE MOUNTED WITH THE BOTTOM OF THE SIGNAL HOUSING INCLUDING BRACKETS NOT LESS THAN 8 FT (2.4 m) OR MORE THAN 10 FT (3 m) ABOVE SIDEWALK LEVEL, AND SHALL BE POSITIONED AND ADJUSTED TO PROVIDE MAXIMUM VISIBILITY AT THE BEGINNING OF THE CONTROLLED CROSSWALK.
2. THE BOTTOM OF THE SIGNAL HOUSING (INCLUDING BRACKETS) OF A VEHICULAR SIGNAL FACE THAT IS NOT LOCATED OVER A HIGHWAY SHALL BE AT LEAST 8 FT (2.4 m) BUT NOT MORE THAN 19 FT (5.8 m) ABOVE THE SIDEWALK OR, IF THERE IS NO SIDEWALK, ABOVE THE PAVEMENT GRADE AT THE CENTER OF THE ROADWAY.
3. THE BOTTOM OF THE SIGNAL HOUSING AND ANY RELATED ATTACHMENTS TO A SIGNAL FACE LOCATED OVER ANY PORTION OF A HIGHWAY SHALL BE ACCORDING TO CURRENT STATE STANDARDS 877001, 877002, 877006, 877011 AND 877012 WITH A MINIMUM OF 16 FT (5.0 m) AND A MAXIMUM OF 18 FT. (5.5 m) FROM THE HIGHEST POINT OF PAVEMENT.
4. THE BOTTOM OF THE TEMPORARY SPAN WIRE MOUNTED SIGNAL HOUSING AND ANY RELATED ATTACHMENTS TO A SIGNAL FACE LOCATED OVER ANY PORTION OF A HIGHWAY SHALL BE ACCORDING TO CURRENT STATE STANDARD 880001 WITH A MINIMUM OF 17 FT (5.18 m) FROM THE HIGHEST POINT OF PAVEMENT.
5. THE TOP OF THE SIGNAL HOUSING OF A SIGNAL FACE LOCATED OVER ANY PORTION OF A HIGHWAY SHALL NOT BE MORE THAN 25.6 FT (7.8 m) ABOVE THE PAVEMENT.

TRAFFIC SIGNAL EQUIPMENT OFFSET

TRAFFIC SIGNAL EQUIPMENT	COMBINATION CONCRETE CURB AND GUTTER (MINIMUM DISTANCE FROM BACK OF CURB TO CENTERLINE OF FOUNDATION)	SHOULDER/NON-CURBED AREA (MINIMUM DISTANCE FROM EDGE OF PAVEMENT TO CENTERLINE OF FOUNDATION)
TRAFFIC SIGNAL MAST ARM POLE	6 FT (1.8m)	SHOULDER WIDTH + 2 FT (0.6m), MINIMUM 10 FT (3.0m)
TRAFFIC SIGNAL POST	4 FT (1.2m)	SHOULDER WIDTH + 2 FT (0.6m), MINIMUM 10 FT (3.0m)
PEDESTRIAN SIGNAL POST	4 FT (1.2m)	SHOULDER WIDTH + 2 FT (0.6m), MINIMUM 10 FT (3.0m)
PEDESTRIAN PUSHBUTTON POST	4 FT (1.2m)	SHOULDER WIDTH + 2 FT (0.6m), MINIMUM 10 FT (3.0m)
TEMPORARY WOOD POLE	6 FT (1.8m)	SHOULDER WIDTH + 2 FT (0.6m), MINIMUM 10 FT (3.0m)
CONTROLLER CABINET	6 FT (1.8m) MINIMUM DISTANCE SEE NOTE 2	SHOULDER WIDTH + 6 FT (1.8m), MINIMUM 16 FT (4.9m) SEE NOTE 3.
SERVICE INSTALLATION, GROUND MOUNT	6 FT (1.8m) MINIMUM DISTANCE SEE NOTE 2	SHOULDER WIDTH + 6 FT (1.8m), MINIMUM 16 FT (4.9m) SEE NOTE 3.

NOTES:

1. CONTACT THE "AREA TRAFFIC SIGNAL MAINTENANCE AND OPERATIONS ENGINEER" FOR ASSISTANCE IN LOCATING THE TRAFFIC SIGNAL EQUIPMENT WHEN THERE ARE CONFLICTS WITH DITCHES OR THE MINIMUM OFFSET DISTANCES CANNOT BE MET.
2. MINIMUM DISTANCE FROM THE BACK OF CURB TO THE ROADWAY SIDE OF THE FOUNDATION.
3. MINIMUM DISTANCE FROM THE EDGE OF PAVEMENT TOTHE ROADWAY SIDE OF THE FOUNDATION.
4. ANY CHANGES TO THE OFFSETS OF THE FOUNDATIONS, FROM THE MINIMUM DISTANCES LISTED IN THE "TRAFFIC SIGNAL EQUIPMENT OFFSET" CHART AND THE TRAFFIC SIGNAL INSTALLATION PLAN, COULD EFFECT THE PLACEMENT OF THE SIGNAL HEADS, PEDESTRIAN SIGNAL HEADS AND THE PEDESTRIAN PUSHBUTTONS. THE SIGNAL HEAD PLACEMENT ON THE MAST ARMS SHALL REMAIN AS PER THE TRAFFIC SIGNAL INSTALLATION PLAN AND THE "TRAFFIC SIGNAL MAST ARM AND SIGNAL POST" DETAIL ABOVE. THE PROPOSED MAST ARM LENGTHS MAY NEED TO BE REVISED TO MEET THE ABOVE REQUIREMENTS. THE PEDESTRIAN SIGNAL HEADS AND PEDESTRIAN PUSHBUTTONS MUST MEET THE REQUIREMENTS UNDER THE DETAILS ON THIS SHEET.

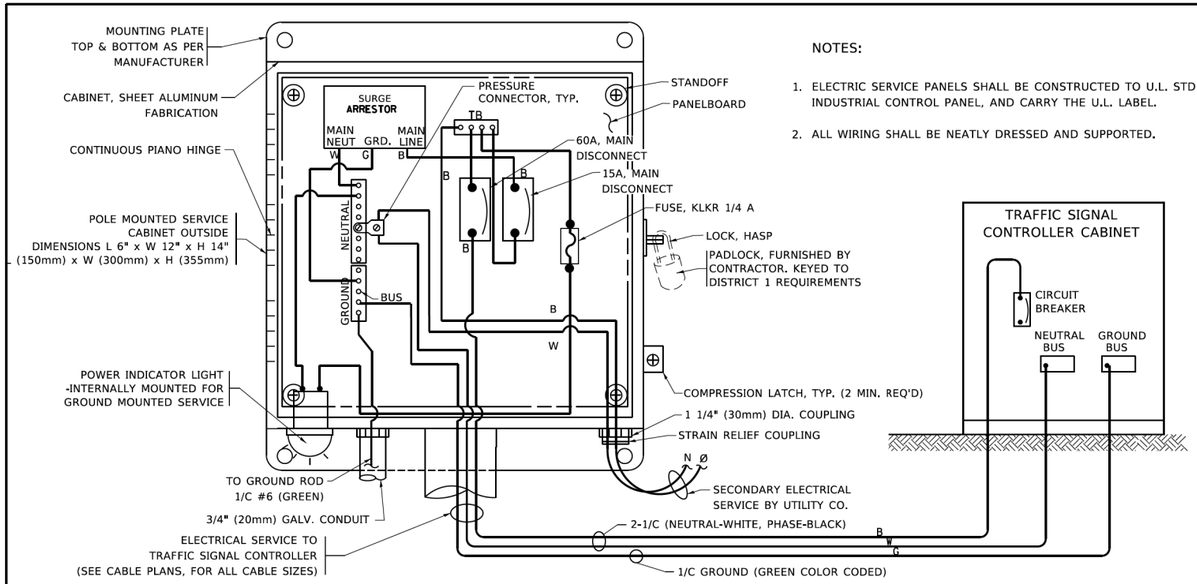

NOTES:

1. ELECTRIC SERVICE PANELS SHALL BE CONSTRUCTED TO U.L. STD 508, INDUSTRIAL CONTROL PANEL, AND CARRY THE U.L. LABEL.
2. ALL WIRING SHALL BE NEATLY DRESSED AND SUPPORTED.

ELECTRICAL SERVICE – PANEL DIAGRAM (TYPICAL FOR POLE AND GROUND MOUNTED SERVICE)

SERVICE INSTALLATION POLE MOUNT (SHOWN)

(NOT TO SCALE)

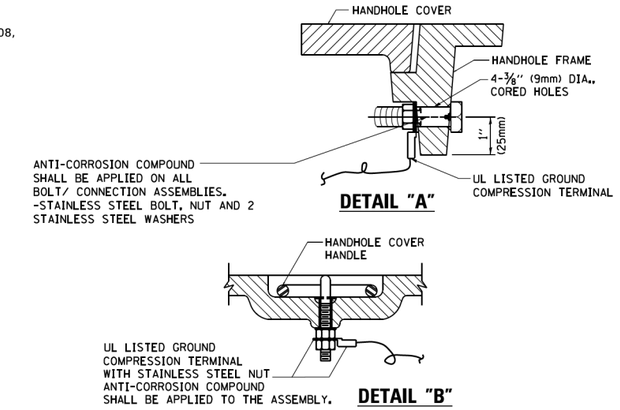

NOTES:

GROUNDING SYSTEM

1. THE GROUNDING SYSTEM SHALL CONSIST OF AN INSULATED CONDUCTOR TYPE XLP, NO. 6 A.W.G., STRANDED COPPER TO BE INSTALLED IN RACEWAYS. THE GROUNDING CABLE SHALL BE INSTALLED IN A CONTINUOUS MANNER AS SHOWN ON THE CABLE PLAN PROVIDED. ALL GROUNDING CONDUCTORS SHALL BE BONDED TO METAL ENCLOSURE (HANDHOLE, POST, MAST ARM, CONTROLLER, ETC,). GROUND ROD SHALL BE 3/4" DIA. x 10'-0" (20mm x 3.0m) LONG, COPPER CLAD. ONE GROUND ROD SHALL BE INSTALLED AT ALL POST FOUNDATIONS, POLE FOUNDATIONS, CONTROLLER CABINET FOUNDATION AND ELECTRICAL SERVICE INSTALLATION AS INDICATED ON THE CABLE PLAN. IF THERE ARE ANY SPECIAL CONDITIONS SUCH AS SUB-SURFACE CONDITIONS OR INSTALLATION PROBLEMS, THE RESIDENT ENGINEER SHALL BE NOTIFIED OR CONTACT THE BUREAU OF TRAFFIC, ILLINOIS DEPARTMENT OF TRANSPORTATION DISTRICT ONE AT (847) 705-4139.
2. THE NEUTRAL CONDUCTOR AND THE GROUND CONDUCTOR SHALL BE CONNECTED IN THE SERVICE INSTALLATION. AT NO OTHER POINT IN THE TRAFFIC SIGNAL SYSTEM SHALL THE NEUTRAL AND GROUND CONDUCTORS BE CONNECTED.
3. ALL EQUIPMENT GROUNDING CONDUCTORS SHALL TERMINATE AT THE GROUND BUS IN THE CONTROLLER CABINET.
4. THE CONTRACTOR SHALL PROVIDE A GROUND CABLE WITH CONNECTORS BETWEEN THE HANDHOLE COVER AND HANDHOLE FRAME.

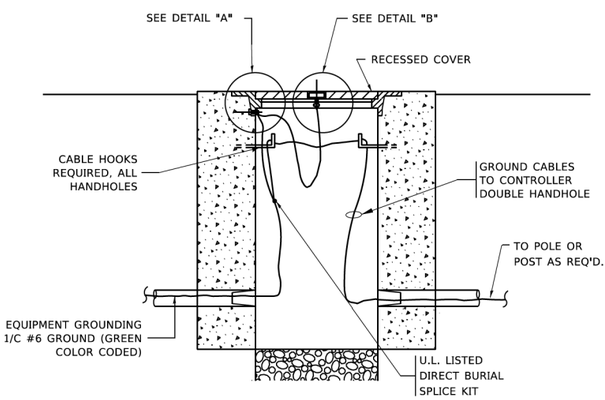

HANDHOLE COVER & FRAME – GROUNDING DETAIL

(NOT TO SCALE)

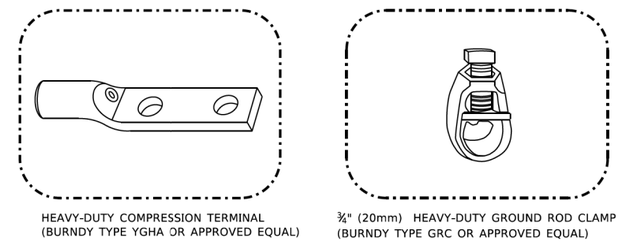

NOTES:

- ALL CLAMPS SHALL BE BRONZE OR COPPER, UL APPROVED.
- GROUND CABLE SHALL BE LOOPED OVER HOOKS IN THE HANDHOLES
  6.5' (2.0m) SLACK SHALL BE PROVIDED IN SINGLE HANDHOLES
  13' (4.0m) OF SLACK SHALL BE PROVIDED IN DOUBLE HANDHOLES.
  5' (1.4m) OF SLACK SHALL BE PROVIDED BETWEEN FRAME AND COVER.

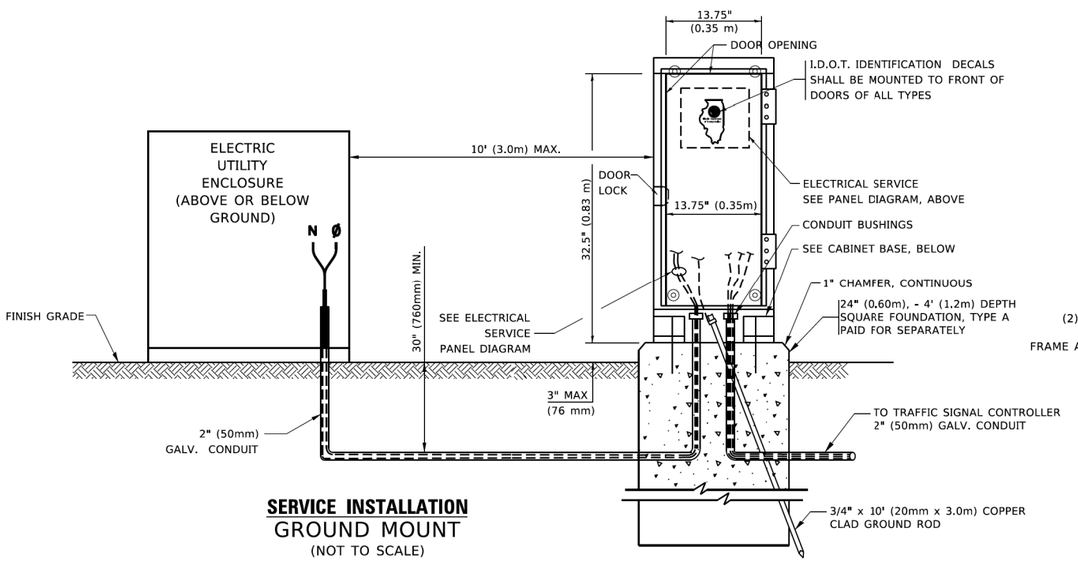

SERVICE INSTALLATION

GROUND MOUNT

(NOT TO SCALE)

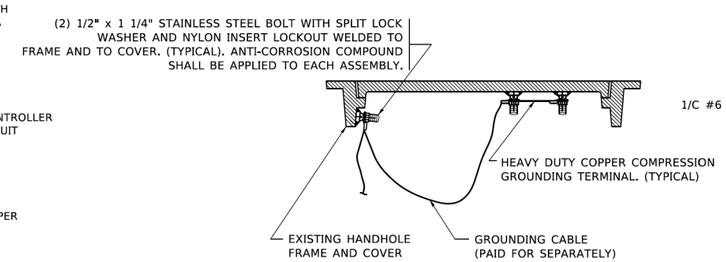

EXISTING HANDHOLE COVER & FRAME – GROUNDING DETAIL

(NOT TO SCALE)

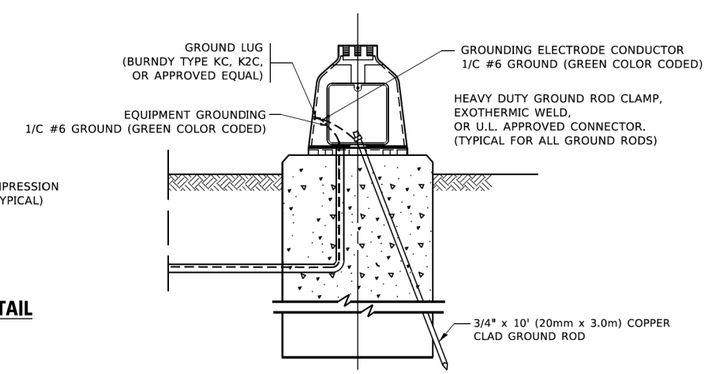

MAST ARM POLE /POST–GROUNDING DETAIL

(NOT TO SCALE)

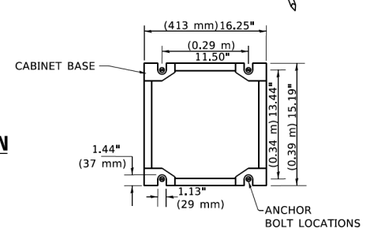

CABINET – BASE BOLT PATTERN

(NOT TO SCALE)

MODEL: Default
FILE NAME: pw:\\IL084EBIDINTEG.illinois.gov:PWIDOT\Documents\IDOT Offices\District 1\Projects\Dist5\d22x34\CADData\CADsheets\ts05.dgn

HRGreen.com
Illinois Professional Design Firm # 184-001322

USER NAME = footemj	DESIGNED -	REVISED -	
	DRAWN -	REVISED -	
PLOT SCALE = 50.0000 ' / in.	CHECKED -	REVISED -	
PLOT DATE = 3/4/2019	DATE -	REVISED -	

STATE OF ILLINOIS
DEPARTMENT OF TRANSPORTATION

DISTRICT ONE
STANDARD TRAFFIC SIGNAL DESIGN DETAILS

SCALE: NONE | SHEET 4 OF 7 SHEETS | STA. | TO STA.

F.A.U. RTE.	SECTION	COUNTY	TOTAL SHEETS	SHEET NO.
4006	22-00094-00-FP	KANE	105	56
	TS–05	CONTRACT NO. 61L58		
		ILLINOIS FED. AID PROJECT		

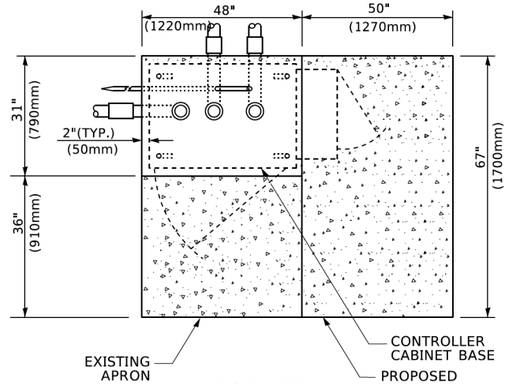

TOP VIEW

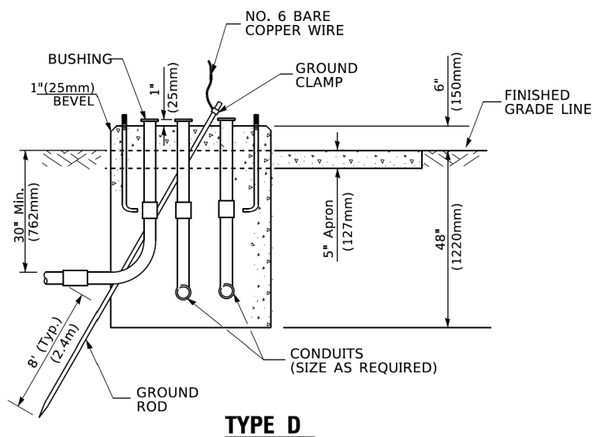

TYPE D
FOR GROUND MOUNTED CONTROLLER CABINET AND UPS BATTERY CABINET

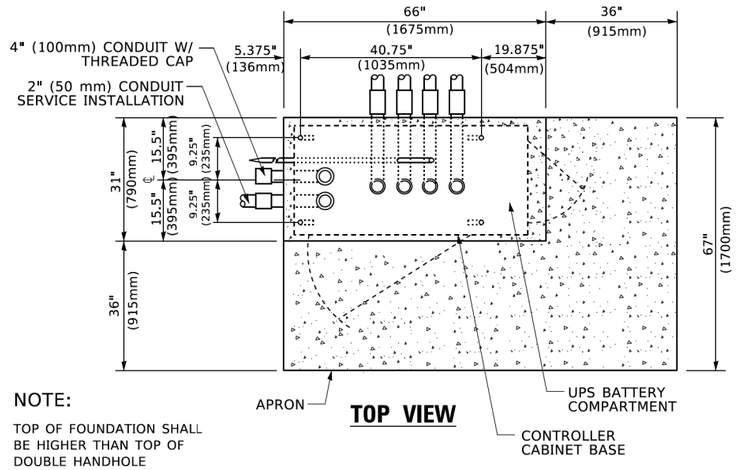

NOTE:

TOP OF FOUNDATION SHALL BE HIGHER THAN TOP OF DOUBLE HANDHOLE

TOP VIEW

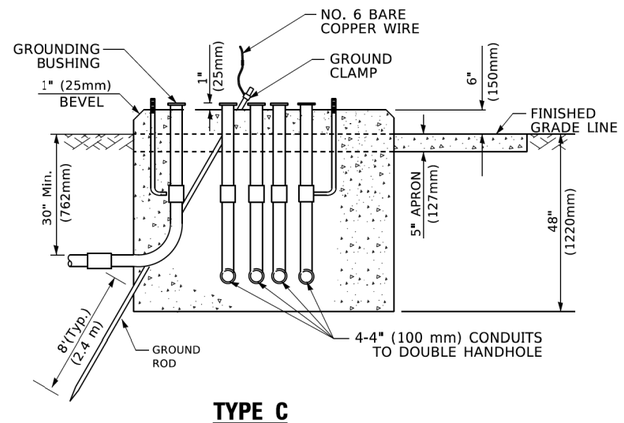

TYPE C
FOR GROUND MOUNTED SUPER P (TYPE IV) AND SUPER R (TYPE V) CONTROLLER CABINETS

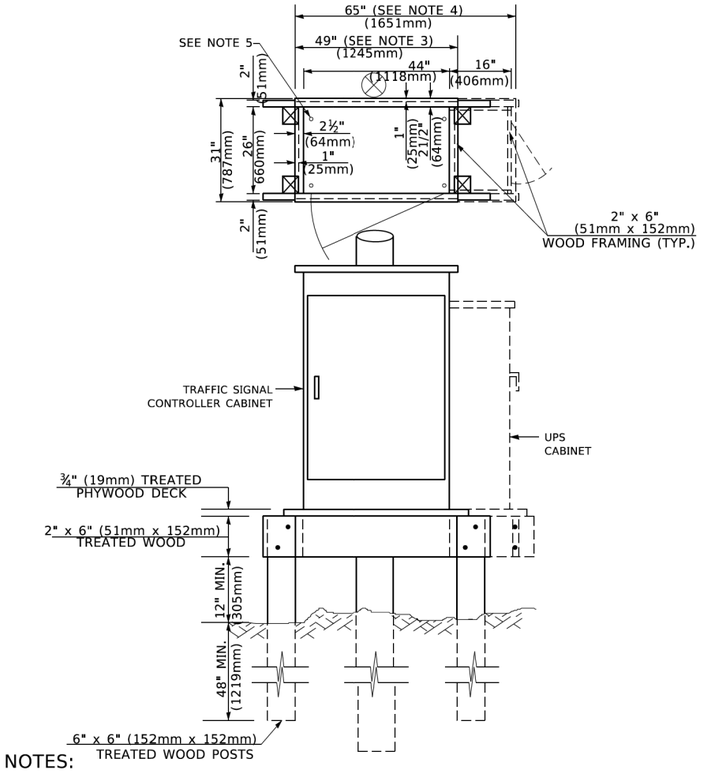

NOTES:

1. BASED ON CONTROLLER CABINET TYPE IV WITH BASE DIMENSIONS OF 26" x 44" (660mm x 1118mm). ADJUST PLATFORM SIZE TO FIT CABINET BASE DIMENSIONS BEING SUPPLIED
2. BASED ON UNINTERRUPTIBLE POWER SUPPLY CABINET WITH BASE DIMENSIONS OF 16" x 25" (406mm x 635mm). ADJUST PLATFORM SIZE TO FIT CABINET BASE DIMENSIONS BEING SUPPLIED.
3. PLATFORM SIZE FOR CONTROLLER CABINET TYPE IV.
4. PLATFORM SIZE FOR CONTROLLER CABINET TYPE IV AND UNINTERRUPTIBLE POWER SUPPLY CABINET.
5. DRILLED HOLES THROUGH THE PLATFORM BASE TO MATCH THE CONTROLLER CABINET BOLT TEMPLATE. FASTEN THE CONTROLLER CABINET TO THE PLATFORM WITH CARRIAGE BOLTS, WASHERS AND NUTS.
6. FASTEN ALL SUPPORT WOOD FRAMING TO THE WOOD POSTS WITH 2 LAG SCREWS FOR EACH CONNECTION..

TEMPORARY SIGNAL CONTROLLER WOOD SUPPORT PLATFORM

CABLE SLACK LENGTH	FEET	METER
HANDHOLE	6.5	2.0
DOUBLE HANDHOLE	13.0	4.0
SIGNAL POST	2.0	0.6
MAST ARM	2.0	0.6
CONTROLLER CABINET	1.5	0.5
FIBER OPTIC AT CABINET	13.0	4.0
ELECTRIC SERVICE AT (CABINET OR SERVICE LOCATION)	1.5	0.5
GROUND CABLE (SIGNAL POST, MAST ARM, CABINET)	1.5	0.5
GROUND CABLE (BETWEEN FRAME AND COVER)	5.0	1.6

CABLE SLACK

VERTICAL CABLE LENGTH	FEET	METER
MAST ARM POLE (MAST ARM MOUNTED SIGNAL HEAD) (L = MAST ARM LENGTH - DISTANCE TO SIGNAL HEAD FROM END OF ARM)	20.0+L	6.0+L
BRACKET MOUNTED (MAST ARM POLE OR SIGNAL POLE)	13.0	4.0
PEDESTRIAN PUSH BUTTON	6.0	2.0
SERVICE INSTALLATION POLE MOUNT TO SERVICE DROP	13.5	4.1
SERVICE INSTALLATION POLE MOUNT TO GROUND	13.5	4.1
SERVICE INSTALLATION GROUND MOUNT	6.0	2.0
FOUNDATION (SIGNAL POST, MAST ARM POLE, CONTROLLER CABINET, SERVICE-GROUND MOUNT)	3.0	1.0

VERTICAL CABLE LENGTH

FOUNDATION	DEPTH
TYPE A - Signal Post	4'-0" (1.2m)
TYPE C - CONTROLLER W/ UPS	4'-0" (1.2m)
TYPE D - CONTROLLER	4'-0" (1.2m)
SERVICE INSTALLATION, GROUND MOUNT, TYPE A - SQUARE	4'-0" (1.2m)

DEPTH OF FOUNDATION

Mast Arm Length	① Foundation Depth	Foundation Diameter	Spiral Diameter	Quantity of Rebars	Size of Rebars
Less than 30' (9.1 m)	10'-0" (3.0 m)	30" (750mm)	24" (600mm)	8	6(19)
Greater than or equal to 30' (9.1 m) and less than 40' (12.2 m)	13'-6" (4.1 m)	30" (750mm)	24" (600mm)	8	6(19)
	11'-0" (3.4 m)	36" (900mm)	30" (750mm)	12	7(22)
Greater than or equal to 40' (12.2 m) and less than 50' (15.2 m)	13'-0" (4.0 m)	36" (900mm)	30" (750mm)	12	7(22)
Greater than or equal to 50' (15.2 m) and up to 55' (16.8 m)	15'-0" (4.6 m)	36" (900mm)	30" (750mm)	12	7(22)
Greater than or equal to 56' (16.8 m) and less than 65' (19.8 m)	21'-0" (6.4 m)	42" (1060mm)	36" (900mm)	16	8(25)
Greater than or equal to 65' (19.8 m) and up to 75' (22.9 m)	25'-0" (7.6 m)	42" (1060mm)	36" (900mm)	16	8(25)

NOTES:

1. These foundation depths are for sites which have cohesive soils (clayey silt, sandy clay, etc.) along the length of the shaft, with an average Unconfined Compressive Strength (Qu) > 1.0 tsf (100 kpa). This strength shall be verified by boring data prior to construction or with testing by the Engineer during foundation drilling. The Bureau of Bridges & structures should be contacted for a revised design if other conditions are encountered.
2. Combination mast arm assemblies under 55 feet (16.8 m) shall use 36" (900 mm) diameter foundations.
3. Combination mast arm assemblies under 56 feet (16.8 m) through 75 feet (22.9 m) shall use 42" (1060 mm) diameter foundations
4. For mast arm assemblies with dual arms refer to state standard 878001..

DEPTH OF MAST ARM FOUNDATIONS, TYPE E

MODEL: Default
FILE NAME: pw:\\IL084EBIDINTEG.illinois.gov:PWIDOT\Documents\IDOT Offices\District 1\Projects\list5\d22x34\CADData\CADsheets\ts05.dgn

HRGreen.com
Illinois Professional Design Firm # 184-001322

USER NAME = footemj	DESIGNED -	REVISED -	
	DRAWN -	REVISED -	
PLOT SCALE = 50.0000 ' / in.	CHECKED -	REVISED -	
PLOT DATE = 3/4/2019	DATE -	REVISED -	

STATE OF ILLINOIS
DEPARTMENT OF TRANSPORTATION

DISTRICT ONE
STANDARD TRAFFIC SIGNAL DESIGN DETAILS

SCALE: NONE | SHEET 5 OF 7 SHEETS | STA. | TO STA.

F.A.U. RTE.	SECTION	COUNTY	TOTAL SHEETS	SHEET NO.
4006	22-00094-00-FP	KANE	105	57
	TS-05	CONTRACT NO. 61L58		
	ILLINOIS	FED. AID PROJECT		

ts05.dgn 3/4/2019 11:23:29 AM User=footemj

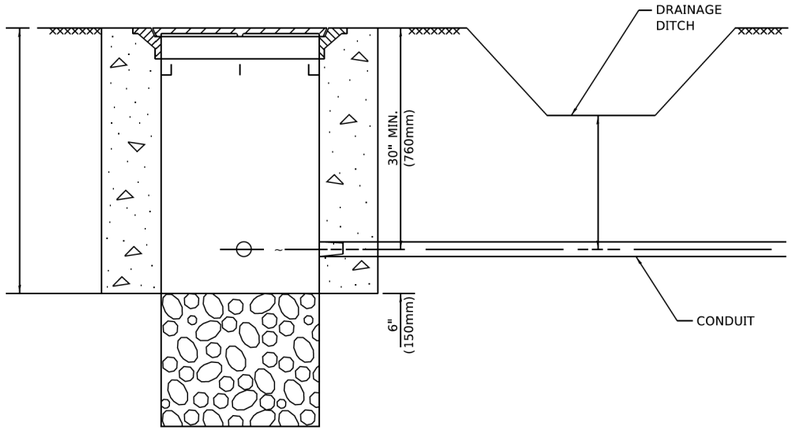

NOTES:

1. CONDUIT DEPTH SHALL BE A MINIMUM OF 30" (760mm) BELOW THE BOTTOM OF THE DRAINAGE DITCH OR ANY SLOPING GROUND
2. THE MINIMUM CONDUIT DEPTH APPLIES TO ALL CONDUIT PLACED UNDER ROADWAY PAVEMENT, MULTI-USE PATHS, SIDEWALKS AND SOIL SURFACES.
3. THE MINIMUM CONDUIT DEPTH APPLIES TO ALL HANDHOLES, HEAVY DUTY HANDHOLES AND DOUBLE HANDHOLES.

HANDHOLE WITH MINIMUM CONDUIT DEPTH

(NOT TO SCALE)

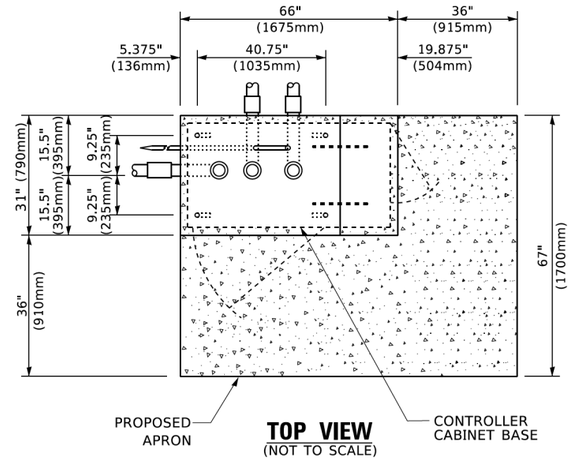

TOP VIEW

(NOT TO SCALE)

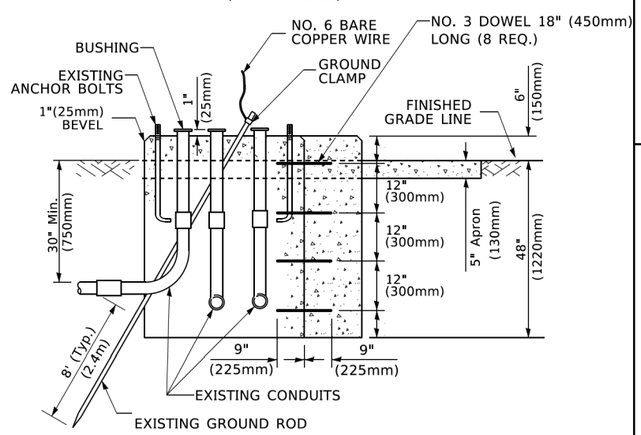

MODIFY EXISTING TYPE "D" FOUNDATION TO TYPE "C" FOUNDATION

(NOT TO SCALE)

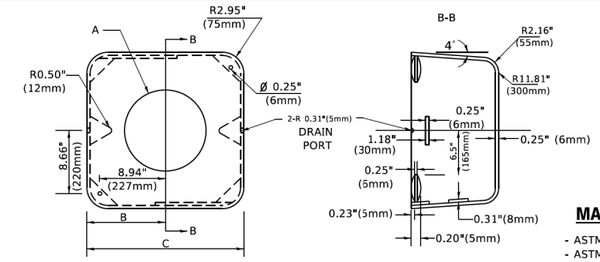

MATERIAL

- ASTM A36 STEEL
- ASTM A-123 HOT DIPPED GALVANIZED

A	B	C	HEIGHT	WEIGHT
VARIES	9.5"(241mm)	19"(483mm)	7" (178mm) - 12" (300mm)	53 lbs (24kg)
VARIES	10.75"(273mm)	21.5"(546mm)	7" (178mm) - 12" (300mm)	68 lbs (31 kg)
VARIES	13.0"(330mm)	26"(660mm)	7" (178mm) - 12" (300mm)	81 lbs (37 kg)
VARIES	18.5"(470mm)	37"(940mm)	7" (178mm) - 12" (300mm)	126 lbs (57 kg)

SHROUD

NOTES:

1. DIMENSION "A" IS EQUAL TO THE DIAMETER OF THE MAST ARM POLE AT THE TOP OF THE SHROUD. THE SHROUD SHALL BE TIGHT TO THE MAST ARM POLE.
2. THE SUPPLIER SHALL VERIFIED THE ABOVE DIMENSIONS BASED ON MAST ARM REQUIREMENTS.
3. THE HEIGHT OF THE SHROUD SHALL COVER THE ANCHOR BOLTS, NUTS AND MAST ARM POLE BASE.

NOTE:

SUPPORT EXISTING CABINET AND CONTROL EQUIPMENT ABOVE FOUNDATION TO KEEP TRAFFIC SIGNAL FUNCTIONING WHILE FOUNDATION MODIFICATION WORK IS PROCEEDING.

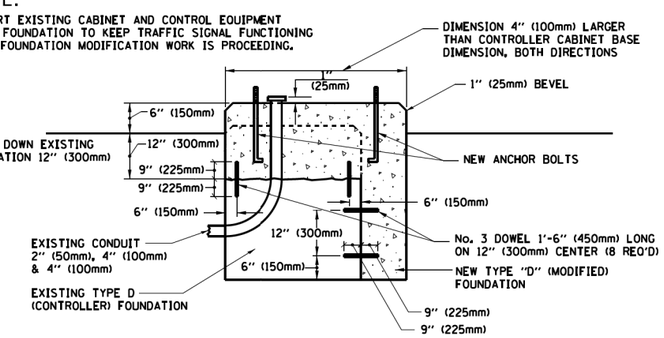

MODIFY EXISTING TYPE "D" FOUNDATION

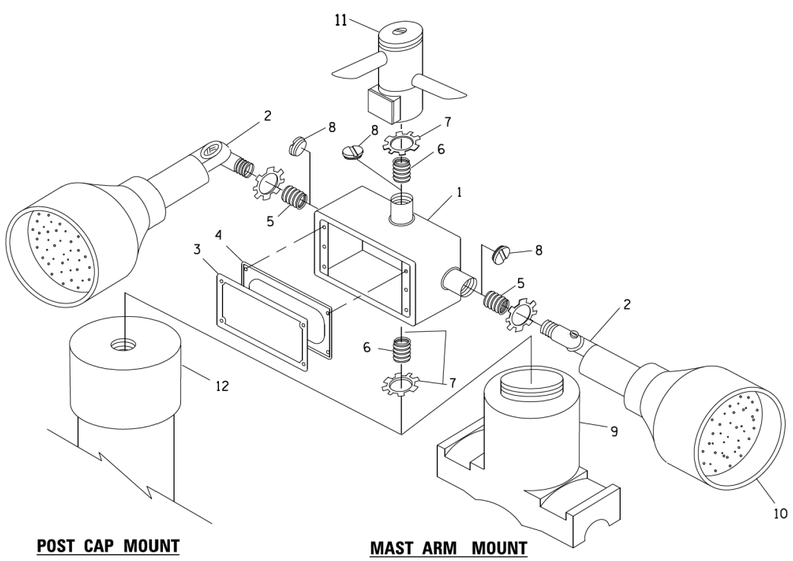

POST CAP MOUNT

MAST ARM MOUNT

EMERGENCY VEHICLE DETECTOR WITH CONFIRMATION BEACON MOUNTING DETAIL

ITEM NO.	IDENTIFICATION
1	OUTLET BOX- GALV. 21 CU.IN. (0.000344 CU-M)
2	LAMP HOLDER AND COVER
3	OUTLET BOX COVER
4	RUBBER COVER GASKET
5	REDUCING BUSHING
6	¾"(19 mm) CLOSE NIPPLE
7	¾"(19 mm) LOCKNUT
8	¾"(19 mm) HOLE PLUG
9	SADDLE BRACKET - GALV.
10	6 WATT PAR 38 LED FLOOD LAMP
11	DETECTOR UNIT
12	POST CAP [18 FT. (5.4 m) POST MIN.]

NOTES:

1. ALL ELECTRICAL ITEMS, EXCEPT ITEMS #2 AND #11 SHALL BE ALUMINUM OR GALVANIZED
2. ITEM #1- OZ/GEDNEY FSX-1-50 OR EQUIVALENT
   ITEM #2- MULBERRY CON-O-SHADE LAMP SHIELD OR EQUIVALENT
   ITEM #9- "BAND-IT" SADDLE BRACKET OR EQUIVALENT
3. WHEN POST MOUNTING IS SPECIFIED, ITEM #9 SHALL NOT BE REQUIRED. THE DETECTION UNIT SHALL BE MOUNTED DIRECTLY ON TOP OF THE CAP BY DRILLING AND TAPPING A 3/4 "(19 mm) HOLE WITH PIPE THREADS. THE POST CAP SHALL EITHER BE SCREWED TO THE TOP OF THE POST OR A MINIMUM OF 3 TIGHTENING SCREWS SHALL BE REQUIRED ON EACH CAP.

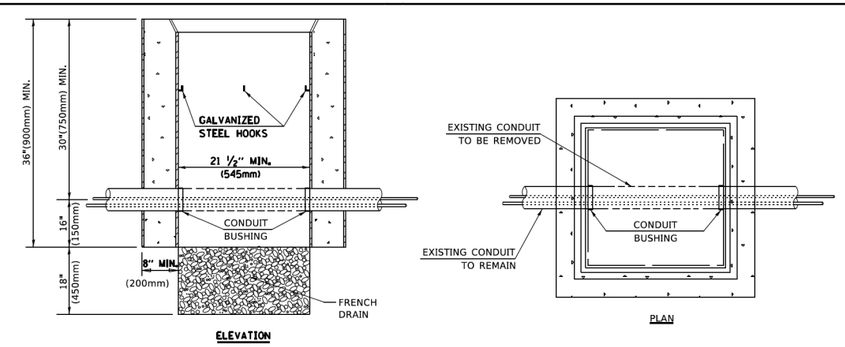

NOTES:

1. HANDHOLE CONSTRUCTED PER STATE STANDARD 814001.
2. REMOVAL OF THE EXISTING CONDUIT FROM THE HANDHOLE AND THE INSTALLATION OF THE CONDUIT BUSHINGS SHALL BE INCLUDED WITH THE COST OF THE HANDHOLE.

HANDHOLE TO INTERCEPT EXISTING CONDUIT

MODEL: Default
FILE NAME: pw:\\IL084EBIDINTEG.illinois.gov:PWIDOT\Documents\IDOT Offices\District 1\Projects\Dist\Std22x34\CADData\CADsheets\ts05.dgn

HRGreen.com
Illinois Professional Design Firm # 184-001322

USER NAME = footemj	DESIGNED -	REVISED -	
	DRAWN -	REVISED -	
PLOT SCALE = 50.0000 ' / in.	CHECKED -	REVISED -	
PLOT DATE = 3/4/2019	DATE -	REVISED -	

STATE OF ILLINOIS
DEPARTMENT OF TRANSPORTATION

DISTRICT ONE
STANDARD TRAFFIC SIGNAL DESIGN DETAILS

SCALE: NONE | SHEET 6 OF 7 SHEETS | STA. TO STA.

F.A.U. RTE.	SECTION	COUNTY	TOTAL SHEETS	SHEET NO.
4006	22-00094-00-FP	KANE	105	58
	TS-05	CONTRACT NO. 61L58		
		ILLINOIS	FED. AID PROJECT	

ts05.dgn 3/4/2019 11:23:51 AM J:\users\footemj

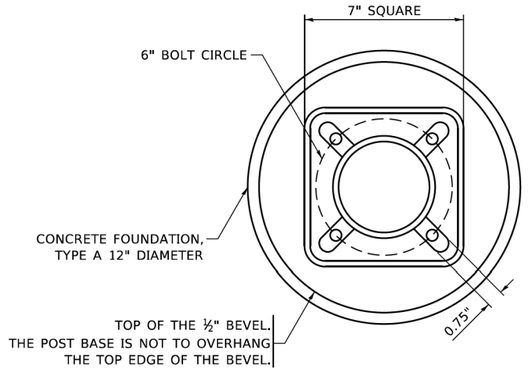

BOLT PATTERN

NOTE:

1. IF THE PEDESTRIAN SIGNAL POST FOUNDATION IS INSTALLED WITHIN OR BEHIND A BARRIER CURB, THE TOP OF THE FOUNDATION SHALL BE INSTALLED FLUSH WITH THE TOP OF THE BARRIER CURB.

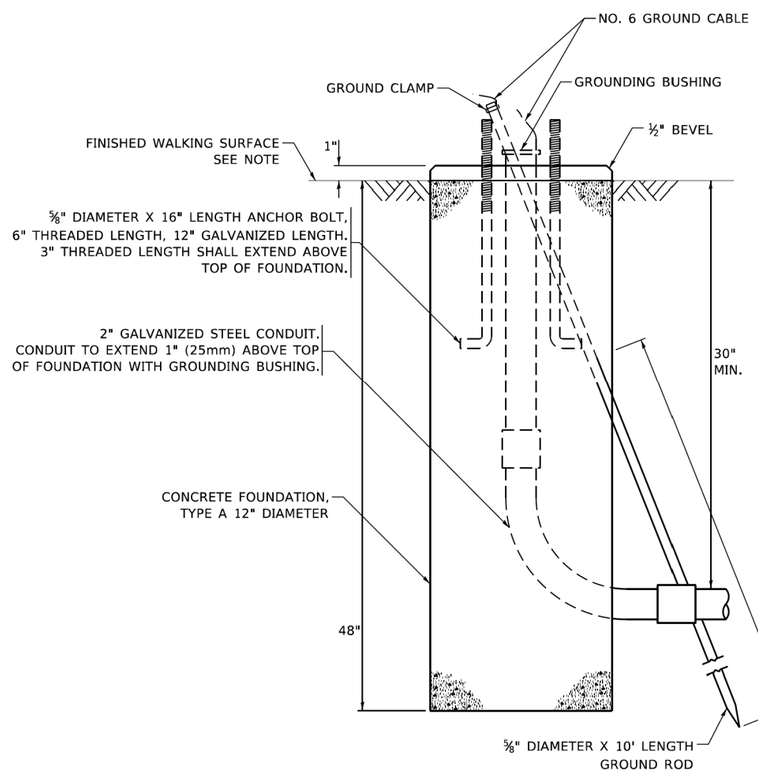

CONCRETE FOUNDATION, TYPE A 12–INCH DIAMETER

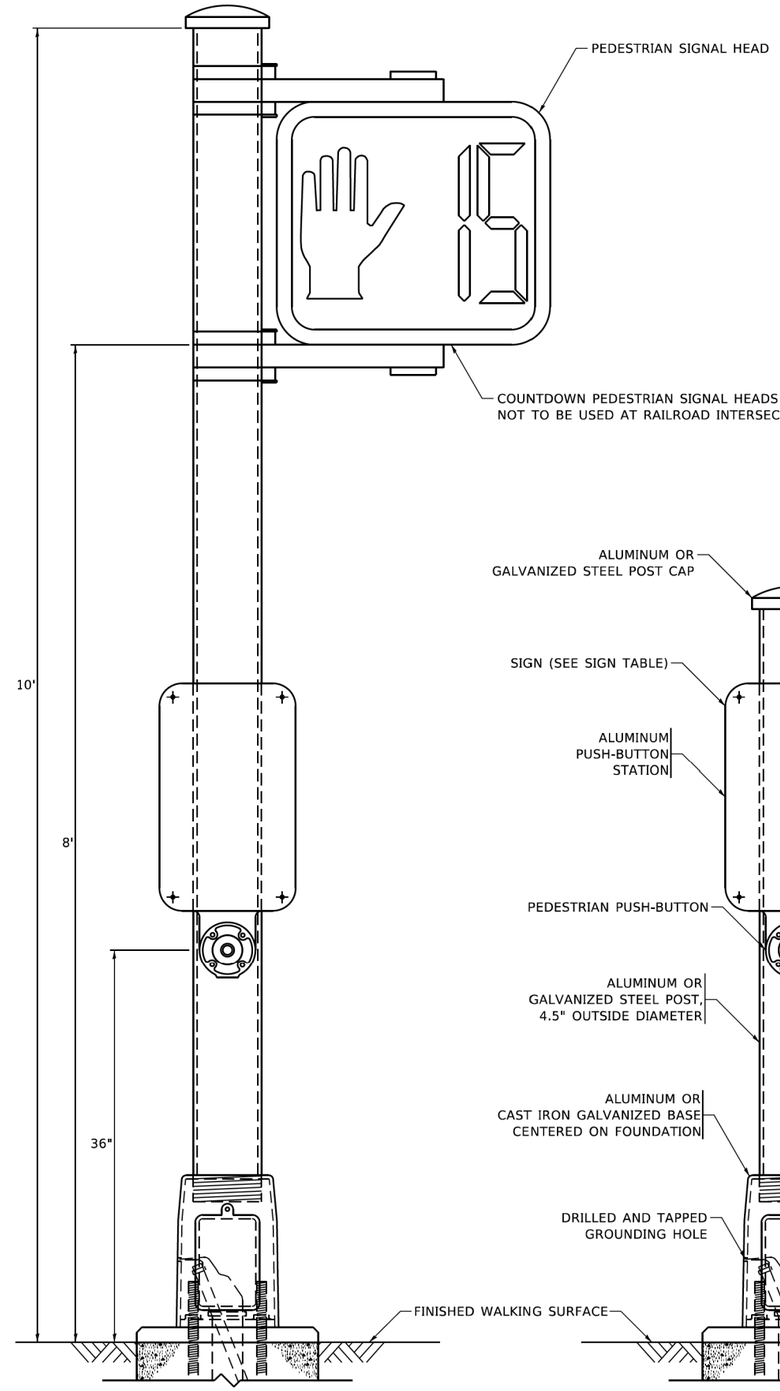

PEDESTRIAN SIGNAL POST, 10 FT.

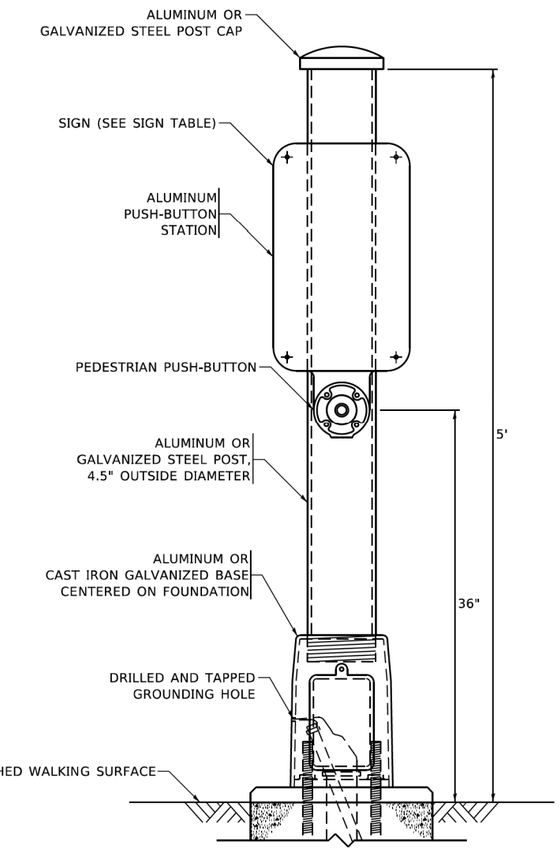

PEDESTRIAN SIGNAL POST, 5 FT.

R10–3b **R10–3d** **R10–3e**

SIGN TABLE

SIGN	DIMENSIONS
R10-3b (RAILROAD ONLY)	9" X 12"
R10-3d (RAILROAD ONLY)	9" X 12"
R10-3e	9" X 12"

NOTES:

1. THE SIGN PANELS SHALL BE TYPE AP SHEETING.
2. THE ARROW ON SIGNS FOR PUSH-BUTTONS SERVING TWO DIRECTIONS ON THE SAME PHASE SHALL BE BI-DIRECTIONAL.
3. THE SIGN FOR DUAL-CALL PUSH-BUTTONS SHALL HAVE NO ARROW.

MODEL: Default
FILE NAME: pw:\\uilanroom.dot.illinois.gov:PWIDOT\Documents\IDOT Offices\District 1\Projects\Std\Std22x34\CADData\CADsheets\ts05.dgn

HRGreen.com
Illinois Professional Design Firm # 184-001322

USER NAME = gaglianobt	DESIGNED - IP	REVISED - 10-15-2020	
	DRAWN - IP	REVISED -	
PLOT SCALE = 100.0000 ' / in.	CHECKED - LP	REVISED -	
PLOT DATE = 11/23/2020	DATE - 10-15-2018	REVISED -	

STATE OF ILLINOIS
DEPARTMENT OF TRANSPORTATION

DISTRICT ONE
STANDARD TRAFFIC SIGNAL DESIGN DETAILS

SCALE: NONE | SHEET 7 OF 7 SHEETS | STA. TO STA.

F.A.U. RTE.	SECTION	COUNTY	TOTAL SHEETS	SHEET NO.
4006	22-00094-00-FP	KANE	105	59
	TS–05	CONTRACT NO. 61L58		
		ILLINOIS FED. AID PROJECT		

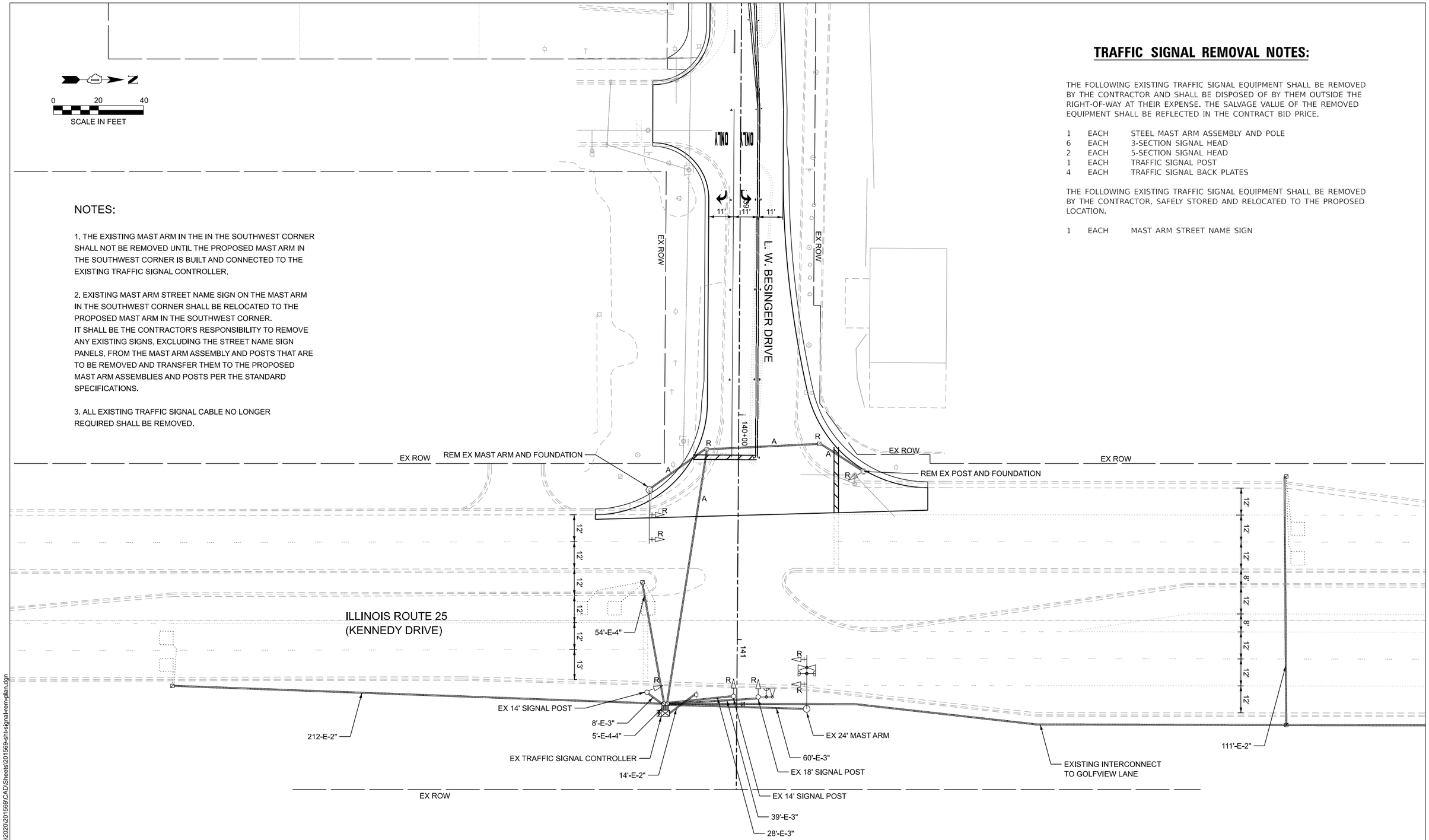

NOTES:

1. THE EXISTING MAST ARM IN THE IN THE SOUTHWEST CORNER SHALL NOT BE REMOVED UNTIL THE PROPOSED MAST ARM IN THE SOUTHWEST CORNER IS BUILT AND CONNECTED TO THE EXISTING TRAFFIC SIGNAL CONTROLLER.

2. EXISTING MAST ARM STREET NAME SIGN ON THE MAST ARM IN THE SOUTHWEST CORNER SHALL BE RELOCATED TO THE PROPOSED MAST ARM IN THE SOUTHWEST CORNER.
IT SHALL BE THE CONTRACTOR'S RESPONSIBILITY TO REMOVE ANY EXISTING SIGNS, EXCLUDING THE STREET NAME SIGN PANELS, FROM THE MAST ARM ASSEMBLY AND POSTS THAT ARE TO BE REMOVED AND TRANSFER THEM TO THE PROPOSED MAST ARM ASSEMBLIES AND POSTS PER THE STANDARD SPECIFICATIONS.

3. ALL EXISTING TRAFFIC SIGNAL CABLE NO LONGER REQUIRED SHALL BE REMOVED.

TRAFFIC SIGNAL REMOVAL NOTES:

THE FOLLOWING EXISTING TRAFFIC SIGNAL EQUIPMENT SHALL BE REMOVED BY THE CONTRACTOR AND SHALL BE DISPOSED OF BY THEM OUTSIDE THE RIGHT-OF-WAY AT THEIR EXPENSE. THE SALVAGE VALUE OF THE REMOVED EQUIPMENT SHALL BE REFLECTED IN THE CONTRACT BID PRICE.

1	EACH	STEEL MAST ARM ASSEMBLY AND POLE
6	EACH	3-SECTION SIGNAL HEAD
2	EACH	5-SECTION SIGNAL HEAD
1	EACH	TRAFFIC SIGNAL POST
4	EACH	TRAFFIC SIGNAL BACK PLATES

THE FOLLOWING EXISTING TRAFFIC SIGNAL EQUIPMENT SHALL BE REMOVED BY THE CONTRACTOR, SAFELY STORED AND RELOCATED TO THE PROPOSED LOCATION.

1	EACH	MAST ARM STREET NAME SIGN

TS 4315
EAGLE 5G

MODEL: Sht-Signal [Sheet]
FILE NAME: \\hrgreen.com\hrg\Data\2020\201569\CAD\Sheets\201569-sht-signal-rem-plan.dgn

HRGreen.com
Illinois Professional Design Firm # 184-001322
HRGreen

USER NAME = jhorwitt	DESIGNED -	REVISED -	
	DRAWN - CWW	REVISED -	
PLOT SCALE = 0.16666633 ' / in.	CHECKED -	REVISED -	
PLOT DATE = 6/12/2025	DATE - 6/12/2025	REVISED -	

STATE OF ILLINOIS
DEPARTMENT OF TRANSPORTATION

EXISTING TRAFFIC SIGNAL AND REMOVAL PLAN
IL ROUTE 25 (KENNEDY DRIVE) AND L.W. BESINGER DRIVE

SCALE: 1"=20' | SHEET 1 OF 3 SHEETS | STA. | TO STA.

F.A.U. RTE.	SECTION	COUNTY	TOTAL SHEETS	SHEET NO.
4006	22-00094-00-FP	KANE	105	60
		CONTRACT NO. 61L58		
		ILLINOIS	FED. AID PROJECT	

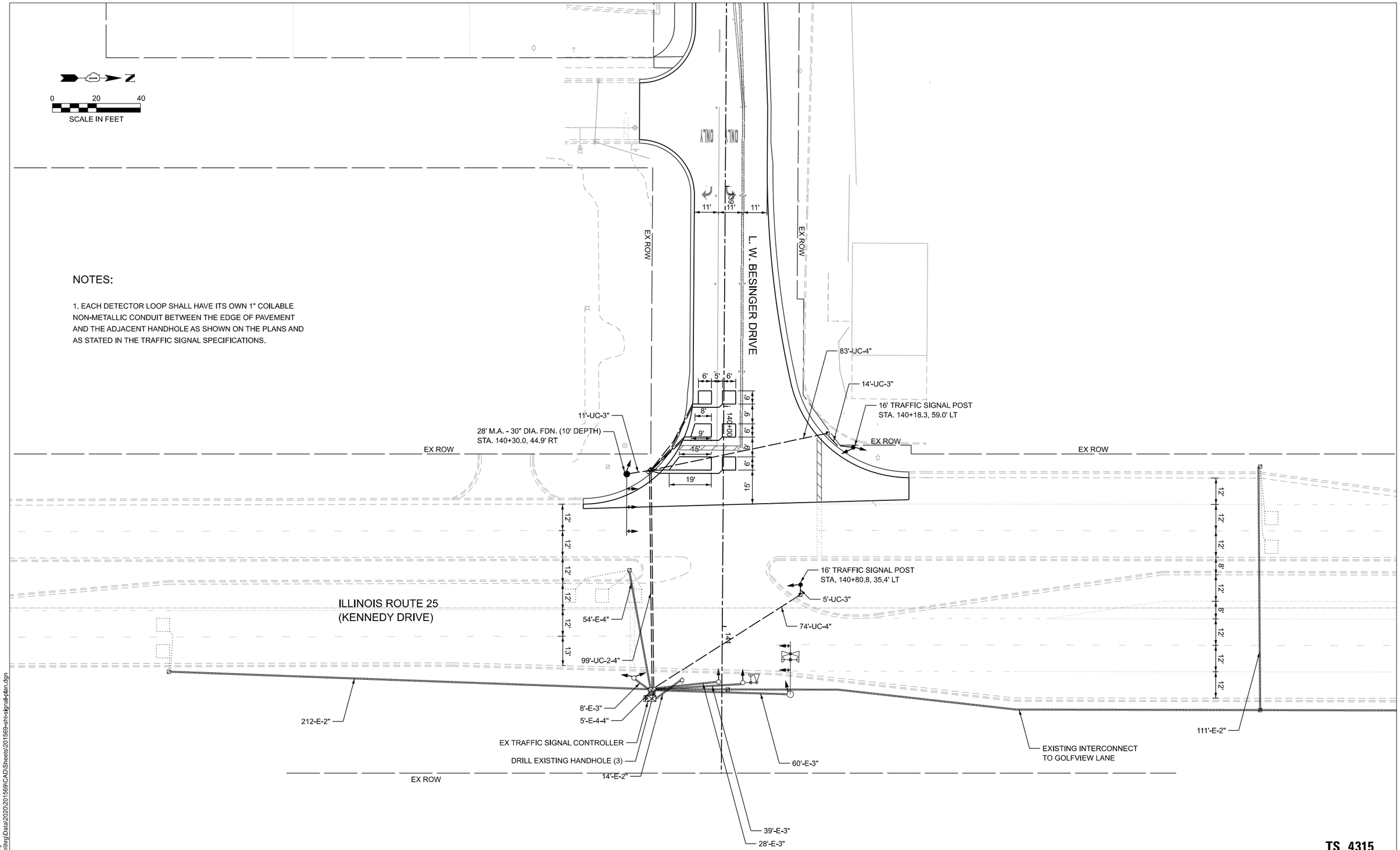

NOTES:

1. EACH DETECTOR LOOP SHALL HAVE ITS OWN 1" COILABLE NON-METALLIC CONDUIT BETWEEN THE EDGE OF PAVEMENT AND THE ADJACENT HANDHOLE AS SHOWN ON THE PLANS AND AS STATED IN THE TRAFFIC SIGNAL SPECIFICATIONS.

TS 4315
EAGLE 5G

MODEL: Sht-Signal [Sheet]
FILE NAME: \\hrgreen.com\hrg\Data\2020\201569\CAD\Sheets\201569-sht-signal-plan.dgn

HRGreen.com
Illinois Professional Design Firm
184-001322
HRGreen

USER NAME = jhorwit	DESIGNED -	REVISED -	
	DRAWN - CWW	REVISED -	
PLOT SCALE = 0.16666633 ' / in.	CHECKED -	REVISED -	
PLOT DATE = 6/12/2025	DATE - 6/12/2025	REVISED -	

STATE OF ILLINOIS
DEPARTMENT OF TRANSPORTATION

TRAFFIC SIGNAL MODERNIZATION PLAN
IL ROUTE 25 (KENNEDY DRIVE) AND L.W. BESINGER DRIVE

SCALE: 1"=20' | SHEET 2 OF 3 SHEETS | STA. | TO STA.

F.A.U. RTE.	SECTION	COUNTY	TOTAL SHEETS	SHEET NO.
4006	22-00094-00-FP	KANE	105	61
		CONTRACT NO.	61L58	
	ILLINOIS	FED. AID PROJECT		

EXISTING CONTROLLER SEQUENCE

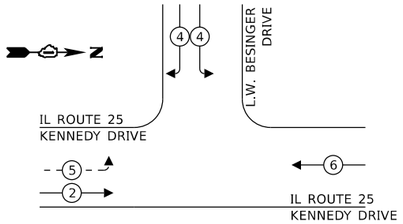

PROPOSED CONTROLLER SEQUENCE

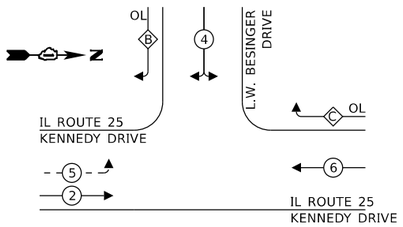

RIGHT TURN OVERLAP PHASE DESIGNATION:

OVERLAP LETTER		PERMISSIVE PHASE		PROTECTED PHASE
B	=	4	+	5
C	=	6	+	4

EXISTING AND PROPOSED EMERGENCY VEHICLE PREEMPTION SEQUENCE

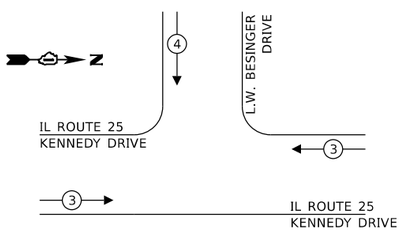

LEGEND:

- PROTECTED PHASE
- PROTECTED/PERMITTED PHASE
- PEDESTRIAN PHASE
- OL — OVERLAP

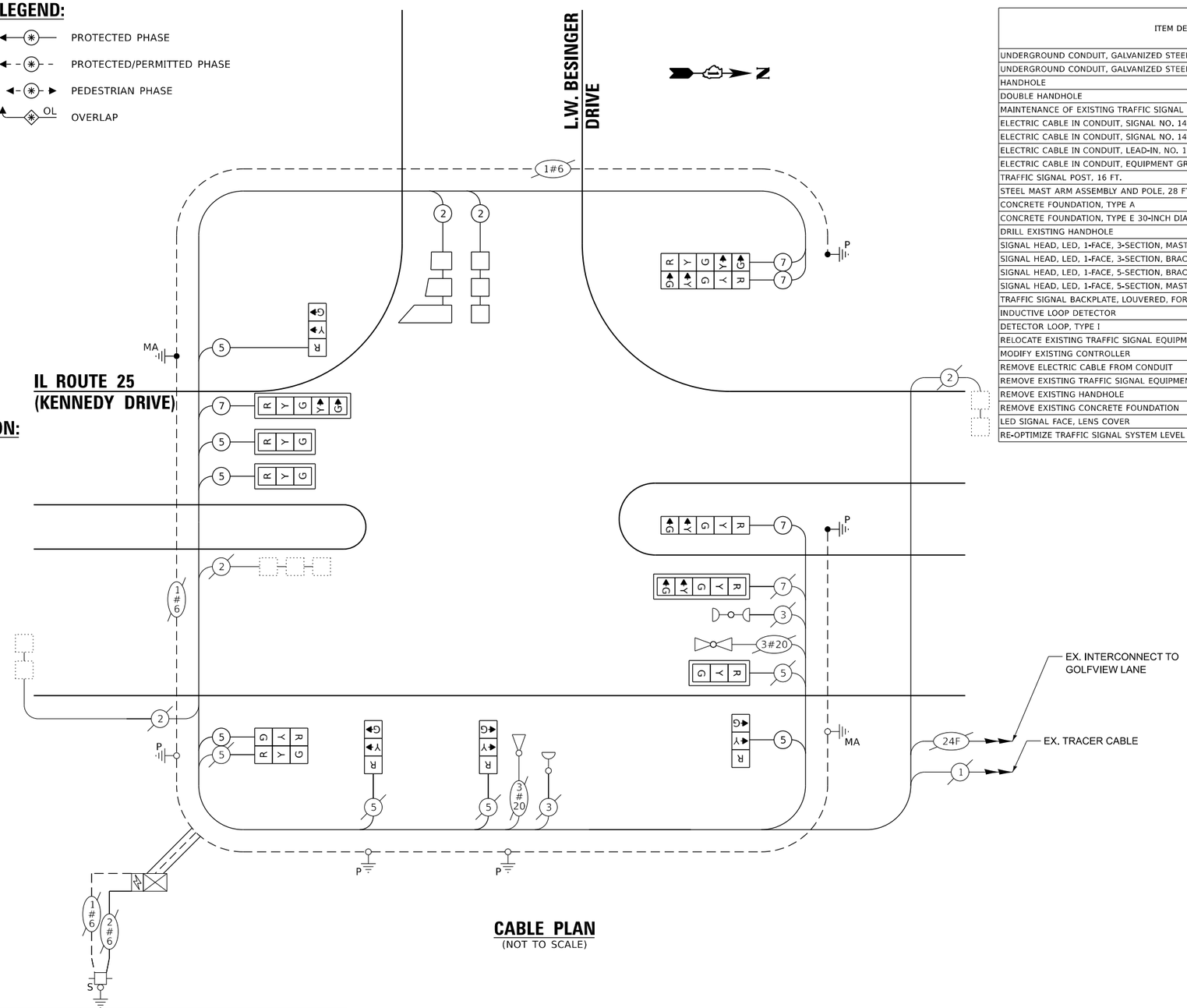

CABLE PLAN
(NOT TO SCALE)

SCHEDULE OF QUANTITIES

ITEM DESCRIPTION	UNITS	TOTAL QTY.
UNDERGROUND CONDUIT, GALVANIZED STEEL, 3" DIA.	FOOT	30
UNDERGROUND CONDUIT, GALVANIZED STEEL, 4" DIA.	FOOT	355
HANDHOLE	EACH	2
DOUBLE HANDHOLE	EACH	1
MAINTENANCE OF EXISTING TRAFFIC SIGNAL INSTALLATION	EACH	1
ELECTRIC CABLE IN CONDUIT, SIGNAL NO. 14 5C	FOOT	695
ELECTRIC CABLE IN CONDUIT, SIGNAL NO. 14 7C	FOOT	815
ELECTRIC CABLE IN CONDUIT, LEAD-IN, NO. 14 1 PAIR	FOOT	406
ELECTRIC CABLE IN CONDUIT, EQUIPMENT GROUNDING CONDUCTOR, NO. 6 1C	FOOT	424
TRAFFIC SIGNAL POST, 16 FT.	EACH	2
STEEL MAST ARM ASSEMBLY AND POLE, 28 FT.	EACH	1
CONCRETE FOUNDATION, TYPE A	FOOT	8
CONCRETE FOUNDATION, TYPE E 30-INCH DIAMETER	FOOT	10
DRILL EXISTING HANDHOLE	EACH	3
SIGNAL HEAD, LED, 1-FACE, 3-SECTION, MAST-ARM MOUNTED	EACH	3
SIGNAL HEAD, LED, 1-FACE, 3-SECTION, BRACKET MOUNTED	EACH	6
SIGNAL HEAD, LED, 1-FACE, 5-SECTION, BRACKET MOUNTED	EACH	3
SIGNAL HEAD, LED, 1-FACE, 5-SECTION, MAST-ARM MOUNTED	EACH	2
TRAFFIC SIGNAL BACKPLATE, LOUVERED, FORMED PLASTIC	EACH	5
INDUCTIVE LOOP DETECTOR	EACH	1
DETECTOR LOOP, TYPE I	FOOT	244
RELOCATE EXISTING TRAFFIC SIGNAL EQUIPMENT	EACH	1
MODIFY EXISTING CONTROLLER	EACH	1
REMOVE ELECTRIC CABLE FROM CONDUIT	FOOT	693
REMOVE EXISTING TRAFFIC SIGNAL EQUIPMENT	EACH	1
REMOVE EXISTING HANDHOLE	EACH	2
REMOVE EXISTING CONCRETE FOUNDATION	EACH	2
LED SIGNAL FACE, LENS COVER	EACH	14
RE-OPTIMIZE TRAFFIC SIGNAL SYSTEM LEVEL 1	EACH	1

TRAFFIC SIGNAL ELECTRICAL SERVICE REQUIREMENTS

EQUIPMENT TYPE	QUANTITY	UNIT WATTAGE	TOTAL WATTAGE
SIGNAL HEAD 1 OR 3-SECTION	9	11	99
4-SECTION	-	14	-
5-SECTION	5	13	65
PROGRAMMABLE 3-SECTION	-	22	-
4-SECTION	-	32	-
5-SECTION	-	28	-
PEDESTRIAN SIGNAL	-	15	-
CONTROLLER	1	150	150
MASTER CONTROLLER	-	100	-
UPS	1	25	25
DETECTION RADAR OR VIDEO	-	20	-
BLANK-OUT SIGN	-	25	-
NETWORK SWITCH II OR III	-	35	-
CELLULAR MODEM	-	15	-
TOTAL UPS SIZING			339
UPS CHARGING	1	225	225
BATTERY HEATER MAT	1	180	180
CABINET HEATER	1	200	200
FLASHER	-	15	-
LED STREET NAME SIGN	-	120	-
LUMINAIRE	-	240	-
TOTAL SERVICE WIRE SIZING			944

ENERGY COSTS TO:
ILLINOIS DEPARTMENT OF TRANSPORTATION
201 WEST CENTER COURT
SCHAUMBURG, IL 60196-1096

ENERGY SUPPLY: CONTACT: CASSIE EVANS
PHONE: (773) 241-0741
COMPANY: COMED
ACCOUNT NUMBER: 52449-42000

NOTE: ALL RED INDICATIONS SHALL HAVE A LENS COVER

TS 4315
EAGLE 5G

MODEL: Sht_Cable-Plan [Sheet]
FILE NAME: \\hrgreen.com\hrg\Data\2020\201569\CAD\Sheets\201569-sht-signal-cable.dgn

HRGreen.com
Illinois Professional Design Firm # 184-001322
HRGreen

USER NAME = jhorwitt	DESIGNED -	REVISED -	
	DRAWN - CWW	REVISED -	
PLOT SCALE = 0.16666633 ' / in.	CHECKED -	REVISED -	
PLOT DATE = 6/12/2025	DATE - 6/12/2025	REVISED -	

STATE OF ILLINOIS
DEPARTMENT OF TRANSPORTATION

CABLE PLAN, PHASE DESIGNATION DIAGRAM, AND EMERGENCY VEHICLE PREEMPTION SEQUENCE
IL ROUTE 25 (KENNEDY DRIVE) AND L.W. BESINGER DRIVE

SCALE: N.T.S. | SHEET 3 OF 3 SHEETS | STA. TO STA.

F.A.U. RTE.	SECTION	COUNTY	TOTAL SHEETS	SHEET NO.
4006	22-00094-00-FP	KANE	105	62
		CONTRACT NO. 61L58		

ILLINOIS | FED. AID PROJECT

GENERAL NOTES:

1. THIS PROJECT INCLUDES THE INSTALLATION OF A NEW LIGHTING SYSTEM ALONG BESINGER DRIVE FROM BALL AVENUE TO IL 25. THE PROPOSED LIGHTING SHALL BE OWNED AND MAINTAINED BY THE VILLAGE OF CARPENTERSVILLE.
2. THE QUANTITIES OF RACEWAYS WHEREVER INDICATED IN THESE PLANS ARE APPROXIMATIONS ONLY.
3. THE CONTRACTOR SHALL NOTIFY J.U.L.I.E TO LOCATE AND MARK/STAKE ALL UNDERGROUND UTILITIES.
4. THE CONTRACTOR SHALL VERIFY LOCATIONS OF UNDERGROUND/OVERHEAD UTILITIES AND TREES PRIOR TO INSTALLATION OF LIGHT POLES AND CONDUITS. IT THERE IS A CONFLICT WITH THE LIGHT POLES/CONDUITS AS SHOWN ON PLANS, THE CONTRACTOR SHALL SUGGEST ALTERNATIVE LOCATIONS AND COORDINATE WITH THE ENGINEER PRIOR TO PERFORMING WORK.
5. TRENCHES FOR LIGHTING RACEWAYS SHALL HAVE A MINIMUM DEPTH OF 30".
6. LIGHTING SYSTEM INSTALLATION SHALL CONFORM TO THE LATEST IDOT STANDARDS, NEC AND VILLAGE OF CARPENTERSVILLE CODES.
7. ALL ELECTRICAL EQUIPMENT AND PRODUCTS SHALL BE U/L LISTED AND LABELED.
8. GROUND ROD SHALL BE INSTALLED AT EACH LIGHTING UNIT.
9. THE CONTRACTOR SHALL TAKE PRECAUTIONS WHEN INSTALLING UNIT DUCT TO AVOID CONFLICTS WITH EXISTING UNDERGROUND UTILITIES AND TREES. THE CONTRACTOR SHALL BE RESPONSIBLE FOR ANY DAMAGE AS DETERMINED BY THE ENGINEER.
10. THE CONTRACTOR SHALL COORDINATE WITH ComEd REGARDING THE REMOVAL OF EXISTING MAST ARMS AND LUMINAIRES ATTACHED TO ComEd POLES, WHEN PROPOSED LIGHTING IS FULLY INSTALLED AND OPERATIONAL.

BILL OF MATERIALS

DESCRIPTION	UNIT	QUANTITY
UNDERGROUND CONDUIT, GALVANIZED STEEL, 4" DIA.	FOOT	34
UNIT DUCT, 600V, 4-1C NO.8, 1/C NO.8 GROUND, (XLP-TYPE USE), 1 1/4" DIA. POLYETHYLENE	FOOT	3115
LIGHT POLE, ALUMINUM, 30FT. M.H. 8FT. MAST ARM	EACH	21
LIGHT POLE FOUNDATION, 24" DIAMETER	FOOT	180
BREAKAWAY DEVICE, TRANSFORMER BASE, 11.5 INCH BOLT CIRCLE	EACH	21
REMOVAL OF LIGHTING UNIT, SALVAGE	EACH	2
REMOVAL OF POLE FOUNDATION	EACH	2
LUMINAIRE, LED, ROADWAY	EACH	21
MAINTENANCE OF LIGHTING SYSTEM	CAL MO	3
LIGHT POLE FOUNDATION, 24" DIAMETER, OFFSET	FOOT	9
LUMINAIRE SAFETY CABLE ASSEMBLY	EACH	21

LEGEND

- PROPOSED LIGHTING UNIT 30FT. MH, 8FT. MAST ARM, 240V (LINE TO LINE), LED LUMINAIRE WITH BREAKAWAY DEVICE
- EXISTING LIGHTING UNIT TO BE REMOVED
- UNIT DUCT, 600V, 4-1C NO. 8, 1/C NO. 8 GROUND, (XLP-TYPE USE), 1¼" DIA. POLYETHYLENE
- EXISTING LIGHTING CONTROLLER "C1", 120/240V, 1 Ø.
- UNDERGROUND CONDUIT, GALVANIZED STEEL
- GROUND ROD 5/8" DIA. X 10 FT.

PROFESSIONAL ENGINEER'S SIGN & SEAL

FOR SHEETS: _____

KOSHY J. VAIDYAN, P.E.
EXPIRES 11-30-2025

KOSHY J. VAIDYAN 37206 LICENSED PROFESSIONAL ENGINEER OF STATE OF ILLINOIS

LT-01

MODEL: Default
FILE NAME: F:\Projects\2024-04 Besinger Dr Carpentersville-HR Green\Design - 10.12\Dgn\D1171436-Border.dgn

AMES Engineering, Inc.
CONSULTING ENGINEERS
6330 Belmont Road, Suite 4B
Downers Grove, IL 60516

USER NAME = mdeitche	DESIGNED - MH	REVISED -	VILLAGE OF CARPENTERSVILLE
	DRAWN - MH	REVISED -	
PLOT SCALE = 0.16666633 ' / in.	CHECKED - KV	REVISED -	
PLOT DATE = 4/21/2025	DATE - 4-21-25	REVISED -	

GENERAL NOTES, LEGEND, AND BILL OF MATERIALS
BESINGER DRIVE

SCALE: | SHEET 1 OF 9 SHEETS | STA. | TO STA.

F.A.U. RTE.	SECTION	COUNTY	TOTAL SHEETS	SHEET NO.
4006	22-00094-00-FP	KANE	105	63

CONTRACT NO. 61L58

ILLINOIS | FED. AID PROJECT

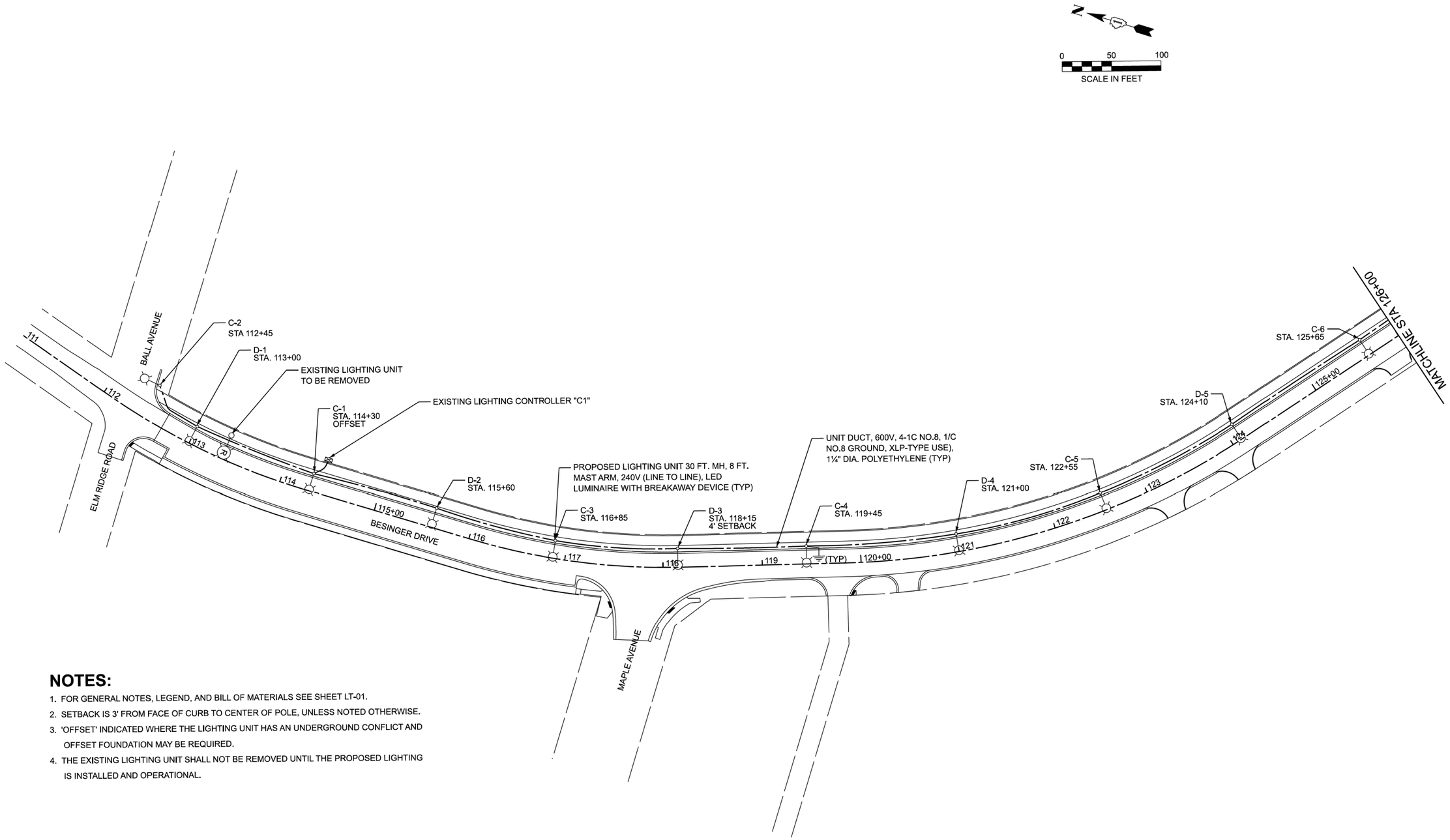

NOTES:

1. FOR GENERAL NOTES, LEGEND, AND BILL OF MATERIALS SEE SHEET LT-01.
2. SETBACK IS 3' FROM FACE OF CURB TO CENTER OF POLE, UNLESS NOTED OTHERWISE.
3. 'OFFSET' INDICATED WHERE THE LIGHTING UNIT HAS AN UNDERGROUND CONFLICT AND OFFSET FOUNDATION MAY BE REQUIRED.
4. THE EXISTING LIGHTING UNIT SHALL NOT BE REMOVED UNTIL THE PROPOSED LIGHTING IS INSTALLED AND OPERATIONAL.

LT-02

MODEL: Default
FILE NAME: F:\Projects\2024-04 Besinger Dr Carpentersville-HR Green\Design - 10.12\Dgn\D1171436-Border.dgn

AMES Engineering, Inc.
CONSULTING ENGINEERS
6330 Belmont Road, Suite 4B
Downers Grove, IL 60516

USER NAME = mdeltche	DESIGNED - MH	REVISED -	
	DRAWN - MH	REVISED -	
PLOT SCALE = 0.16666633 ' / in.	CHECKED - KV	REVISED -	
PLOT DATE = 4/21/2025	DATE - 4-21-25	REVISED -	

VILLAGE OF CARPENTERSVILLE

PROPOSED LIGHTING PLAN
BESINGER DRIVE

SCALE: 1"=50' | SHEET 2 OF 9 SHEETS | STA. 111+00.24 TO STA. 126+00.24

F.A.U. RTE.	SECTION	COUNTY	TOTAL SHEETS	SHEET NO.
4006	22-00094-00-FP	KANE	105	64
		CONTRACT NO. 61L58		
		ILLINOIS	FED. AID PROJECT	

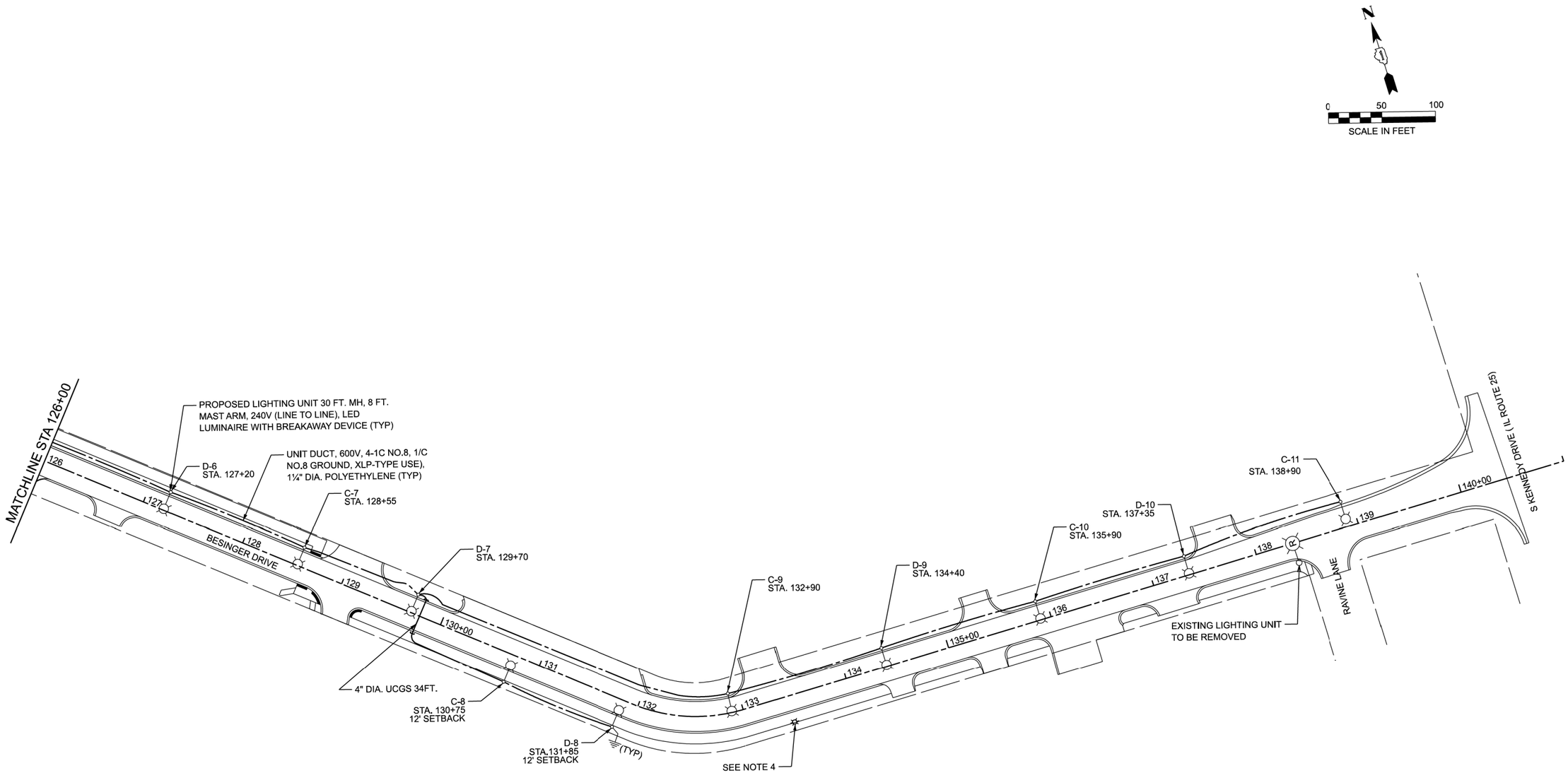

NOTES:

1. FOR GENERAL NOTES, LEGEND, AND BILL OF MATERIALS SEE SHEET LT-01.
2. SETBACK IS 3' FROM FACE OF CURB TO CENTER OF POLE, UNLESS NOTED OTHERWISE.
3. UCGS STANDS FOR UNDERGROUND CONDUIT, GALVANIZED STEEL.
4. THE CONTRACTOR SHALL COORDINATE WITH comed REGARDING THE REMOVAL OF EXISTING MAST ARM AND LUMINAIRE ATTACHED TO comed POLE, WHEN PROPOSED LIGHTING IS FULLY INSTALLED AND OPERATIONAL.
5. THE EXISTING LIGHTING UNIT SHALL NOT BE REMOVED UNTIL THE PROPOSED LIGHTING IS INSTALLED AND OPERATIONAL.

LT-03

MODEL: Default
FILE NAME: F:\Projects\2024-04 Besinger Dr Carpentersville-HR Green\Design - 10.12\Dgn\D1171436-Border.dgn

AMES Engineering, Inc.
CONSULTING ENGINEERS
6330 Belmont Road, Suite 4B
Downers Grove, IL 60516

USER NAME = mdeltche	DESIGNED - MH	REVISED -	
	DRAWN - MH	REVISED -	
PLOT SCALE = 0.16666633 ' / in.	CHECKED - KV	REVISED -	
PLOT DATE = 4/21/2025	DATE - 4-21-25	REVISED -	

VILLAGE OF CARPENTERSVILLE

PROPOSED LIGHTING PLAN
BESINGER DRIVE

SCALE: 1"=50' | SHEET 3 OF 9 SHEETS | STA. 126+00.24 TO STA. 141+00.24

F.A.U. RTE.	SECTION	COUNTY	TOTAL SHEETS	SHEET NO.
4006	22-00094-00-FP	KANE	105	65
		CONTRACT NO. 61L58		
		ILLINOIS	FED. AID PROJECT	

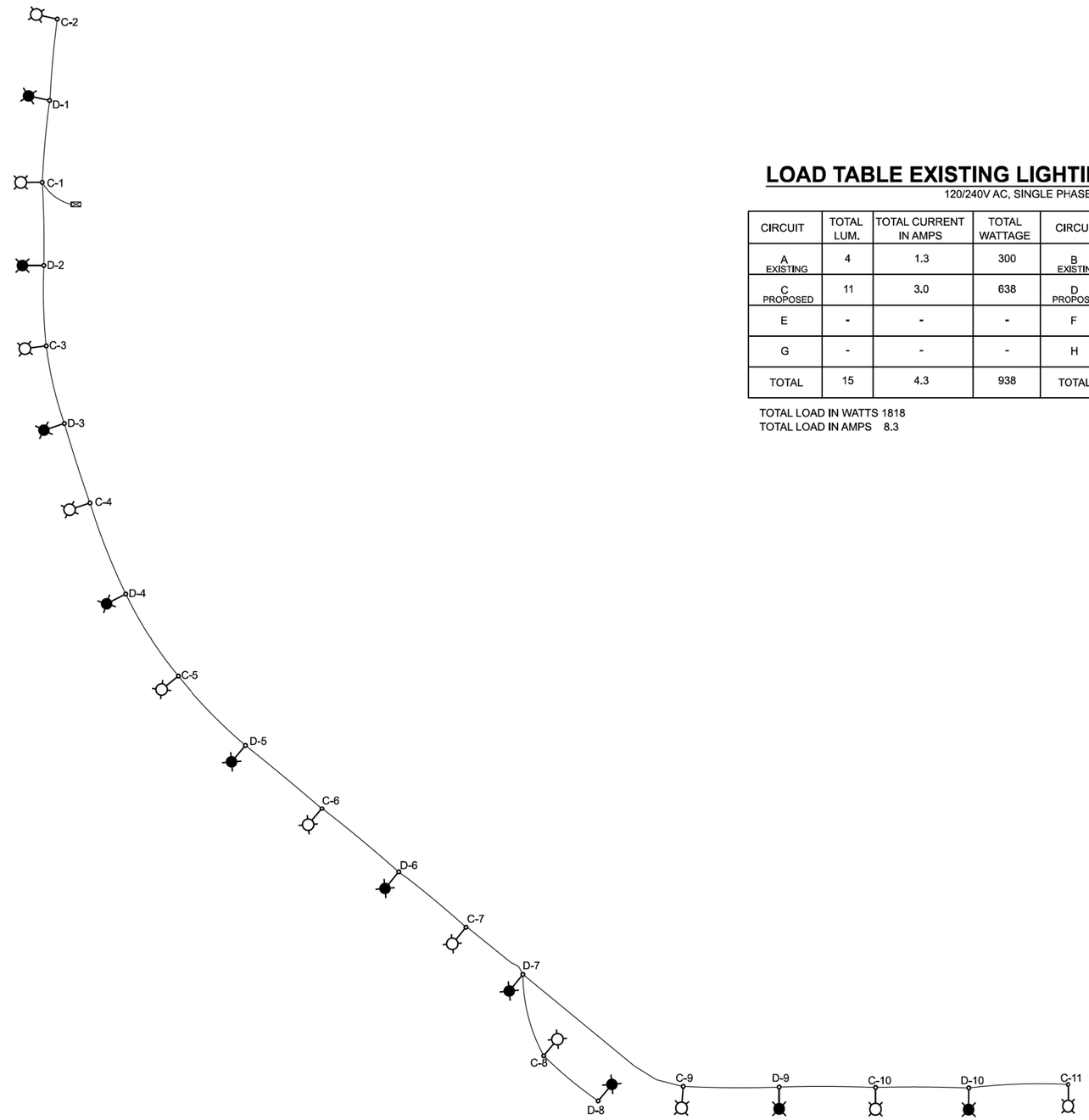

LOAD TABLE EXISTING LIGHTING CONTROLLER "C1"

120/240V AC, SINGLE PHASE

CIRCUIT	TOTAL LUM.	TOTAL CURRENT IN AMPS	TOTAL WATTAGE	CIRCUIT	TOTAL LUM.	TOTAL CURRENT IN AMPS	TOTAL WATTAGE
A EXISTING	4	1.3	300	B EXISTING	4	1.3	300
C PROPOSED	11	3.0	638	D PROPOSED	10	2.7	580
E	-	-	-	F	-	-	-
G	-	-	-	H	-	-	-
TOTAL	15	4.3	938	TOTAL	14	4.0	880

TOTAL LOAD IN WATTS 1818
TOTAL LOAD IN AMPS 8.3

LEGEND

PROPOSED LUMINAIRE, LED, 240V, 0.27A., 58W, 1Ø , ON CIRCUIT C

PROPOSED LUMINAIRE, LED, 240V, 0.27A., 58W, 1Ø , ON CIRCUIT D

UNIT DUCT, 600V, 4-1C NO. 8, 1/C NO. 8 GROUND, (XLP-TYPE USE), 1¼" DIA. POLYETHYLENE

EXISTING LIGHTING CONTROLLER "C1", 120/240V, 1 Ø.

LT-04

MODEL: Default
FILE NAME: F:\Projects\2024-04 Besinger Dr Carpentersville-HR Green\Design - 10.12\Dgn\D1171436-Border.dgn

AMES Engineering, Inc.
CONSULTING ENGINEERS
6330 Belmont Road, Suite 4B
Downers Grove, IL 60516

USER NAME = mdeltche	DESIGNED - MH	REVISED -	
	DRAWN - MH	REVISED -	
PLOT SCALE = 0.16666633 ' / in.	CHECKED - KV	REVISED -	
PLOT DATE = 4/21/2025	DATE - 4-21-25	REVISED -	

VILLAGE OF CARPENTERSVILLE

SINGLE LINE WIRING DIAGRAM
BESINGER DRIVE

SCALE: SHEET 4 OF 9 SHEETS STA. TO STA.

F.A.U. RTE.	SECTION	COUNTY	TOTAL SHEETS	SHEET NO.
4006	22-00094-00-FP	KANE	105	66

CONTRACT NO. 61L58

ILLINOIS FED. AID PROJECT

LIGHT POLE FOUNDATION DEPTH TABLE
30 FT. (9.144 m) TO 35 FT. (10.668 m) MOUNTING HEIGHT

SOIL CONDITIONS	DESIGN DEPTH "D" OF FOUNDATION	
	SINGLE ARM POLE	TWIN ARM POLE
SOFT CLAY Qu = 0.375 TON/SQ. FT.	11'-0" (3.35 m)	12'-8" (3.85 m)
MEDIUM CLAY Qu = 0.75 TON/SQ.FT	9'-0" (2.74 m)	14'-10" (4.52 m)
STIFF CLAY Qu = 1.50 TON/SQ. FT.	7'-6" (2.29 m)	8'-7" (2.61 m)
LOOSE SAND ∅ = 34°	9'-6" (2.90 m)	10'-7" (3.22 m)
MEDIUM SAND ∅ = 37.5°	9'-0" (2.74 m)	9'-10" (2.99 m)
DENSE SAND ∅ = 40°	8'-3" (2.51 m)	9'-7" (2.91 m)

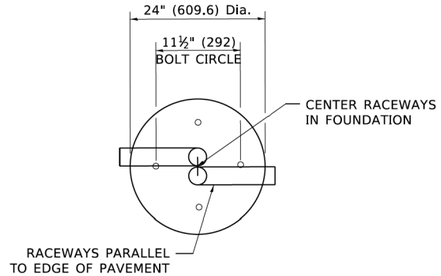

TOP VIEW

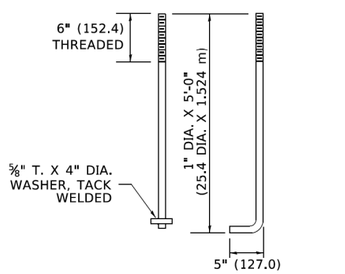

ANCHOR BOLT DETAIL

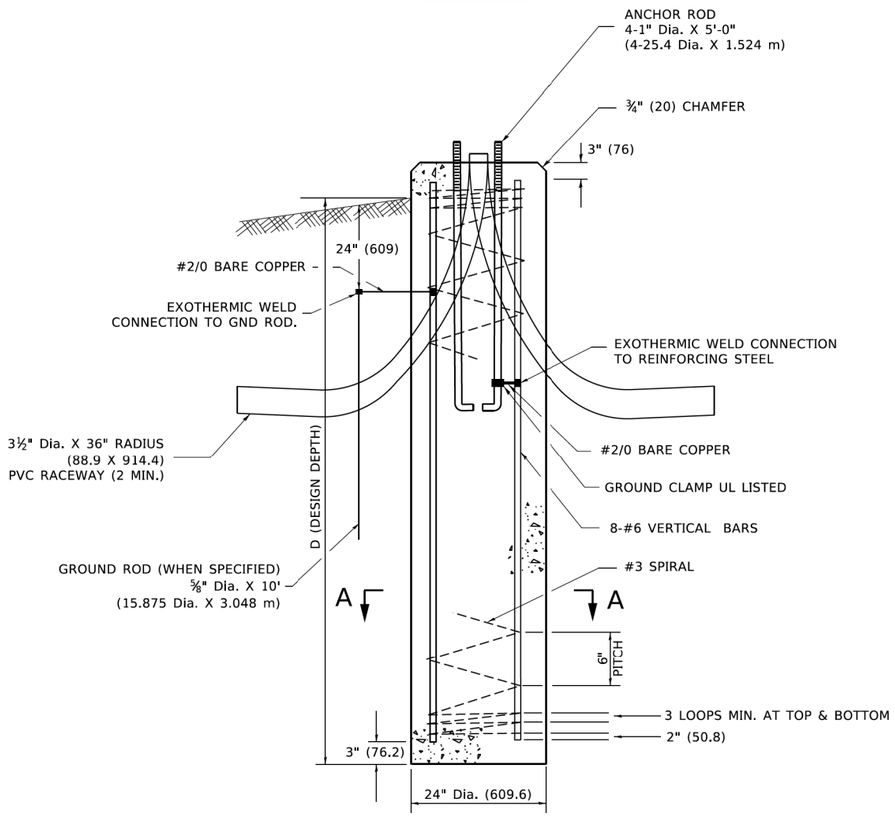

FOUNDATION DETAIL

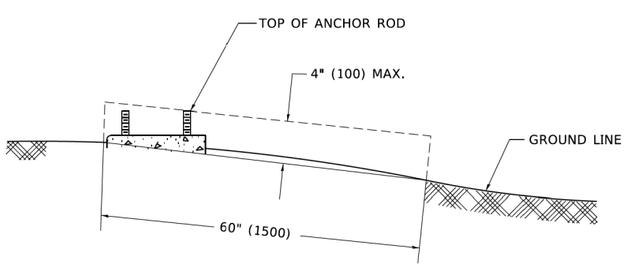

FOUNDATION EXTENSION DETAIL

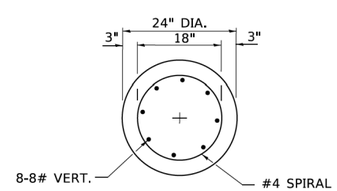

SECTION A–A

NOTES

1. ALL DIMENSIONS ARE IN INCHES (MILLIMETERS) UNLESS OTHERWISE SHOWN.
2. THE ANCHOR RODS AND RACEWAYS SHALL BE PROPERLY SECURED IN PLACE BEFORE THE CONCRETE IN PLACED.
3. THE FOUNDATION SHALL NOT PROTRUDE MORE THAN 4 IN. (100 mm) ABOVE THE FINISHED GRADE WITHIN A 60 IN. (1.5 m) CHORD ACROSS THE FOUNDATION, WITH ANCHOR RODS INCLUDED, IN ACCORDANCE WITH AASHTO GUIDELINES. IF THE FOUNDATION HEIGHT, INCLUDING ANCHOR RODS, EXTENDS BEYOND THESE SPECIFIED LIMITS, THE FOUNDATION SHALL BE REPLACED AT THE CONTRACTOR'S EXPENSE. SEE FOUNDATION EXTENSION DETAIL.
4. THE HOLE FOR THE FOUNDATION SHALL BE MADE BY DRILLING WITH AN AUGER, OF THE SAME DIAMETER AS THE FOUNDATION. IF SOIL CONDITIONS REQUIRE THE USE OF A LINER TO FORM THE HOLE, THE LINER SHALL BE WITHDRAWN AS THE CONCRETE IS DEPOSITED.
5. THE TOP OF THE FOUNDATION SHALL BE CONSTRUCTED LEVEL. A LINER OR FORM SHALL BE USED TO PRODUCE A UNIFORM SMOOTH SIDE TO THE TOP OF THE FOUNDATION. FOUNDATION TOP SHALL BE CHAMFERED 3#4-IN. (20 mm).
6. THE CONCRETE SHALL BE CLASS SI. CONCRETE SHALL CURE ACCORDING TO ARTICLE 1020.13 BEFORE LIGHT POLES ARE INSTALLED.
7. THE ANCHOR ROD SHALL BE A HOOK ROD TYPE. COLD BENDING OF THE ANCHOR ROD WILL NOT BE ALLOWED. THE RADIUS OF THE HOOK BEND SHALL NOT BE LESS THAN 4 TIMES THE NOMINAL DIAMETER OF THE ANCHOR ROD. A TACK WELDED ANCHOR ROD MAY BE SUBSTITUTED WITH THE APPROVAL OF THE ENGINEER.
8. ANCHOR RODS, NUTS AND WASHERS SHALL BE COMPLETELY GALVANIZED BY EITHER THE HOT-DIPPED PROCESS CONFORMING WITH AASHTO M 232, THE MECHANICAL PLATING METHOD CONFORMING TO AASHTO M 298, CLASS 50 WITH A MAXIMUM COATING THICKNESS OF 150 UM(6 MILS) OR THE ELECTROLYTIC PROCESS ACCORDING TO ASTM F 1136.
9. THE ANCHOR RODS SHALL BE THREADED A MINIMUM OF 6 INCHES (150 mm) WITH A MINIMUM OF 3 INCHES (75 mm) OF THREADED ANCHOR ROD EMBEDDED IN THE FOUNDATION.
10. ANCHOR RODS SHALL PROJECT 23#4" (69.9 mm) ABOVE THE TOP OF THE FOUNDATION. IF BREAKAWAY COUPLINGS ARE SPECIFIED, THE CONTRACTOR SHALL CAREFULLY COORDINATE THE ANCHOR ROD PROJECTION WITH THE INSTALLATION REQUIREMENTS OF THE BREAKAWAY COUPLINGS.
11. THE CONTRACTOR SHALL USE A #3 SPIRAL AT 6" (152.4 mm) PITCH OR MAY SUBSTITUTE #3 TIES AT 12" (304.8 mm) O.C. WITH THE APPROVAL OF THE ENGINEER.
12. THE CABLE TRENCHES AND FOUNDATION SHALL BE BACK FILLED AND COMPACTED AS SPECIFIED BEFORE THE LIGHT POLE IS ERECTED.
13. THE RACEWAYS SHALL PROJECT 1" (25.4 mm) ABOVE THE TOP OF THE FOUNDATION.

LT-05

MODEL: Default
FILE NAME: pw:\\planroom.dot.illinois.gov:PWIDOT\Documents\IDOT Offices\District 1\Projects\Std22x34\CADData\CADsheets\be300.dgn

AMES Engineering, Inc.
CONSULTING ENGINEERS
6330 Belmont Road, Suite 4B
Downers Grove, IL 60516

USER NAME = footemj	DESIGNED -	REVISED -
	DRAWN -	REVISED -
PLOT SCALE = 50.0000 ' / in.	CHECKED -	REVISED -
PLOT DATE = 4/19/2019	DATE -	REVISED -

STATE OF ILLINOIS
DEPARTMENT OF TRANSPORTATION

LIGHT POLE FOUNDATION
30' (9.144 m) TO 35' (10.668 m) M.H. 11 1/2" (292 mm) BOLT CIRCLE

SCALE: NONE | SHEET 15 OF 19 SHEETS | STA. | TO STA.

F.A.U. RTE.	SECTION	COUNTY	TOTAL SHEETS	SHEET NO.
4006			105	67
	BE–300	CONTRACT NO. 61L58		
		ILLINOIS	FED. AID PROJECT	

be300.dgn 4/19/2019 2:16:45 PM User=footemj

FOUNDATION DESIGN TABLE

TYPE OF SOIL	DESIGN DEPTH OF FOUNDATION		REINFORCEMENT IN FOUNDATION			
	SINGLE ARM D	TWIN ARM D	SINGLE ARM		TWIN ARM	
			VERT BARS	SPIRAL	VERT BARS	SPIRAL
SOFT CLAY	13'-0" (3.962 m)	15'-0" (4.572 m)	8-#6X12'-6" (3.810 m)	#3X122' (37.186 m)	8-#6X14'-3" (4.343 m)	#3X141' (42.977 m)
MEDIUM CLAY	9'-6" (2.896 m)	10'-9" (3.277 m)	8-#6X9'-0" (2.743 m)	#3X90' (27.432 m)	8-#6X10'-0" (3.048 m)	#3X100' (30.480 m)
STIFF CLAY	7'-0" (2.134 m)	8'-0" (2.438 m)	8-#6X6'-6" (1.981 m)	#3X66' (20.112 m)	8-#6X7'-6" (2.286 m)	#3X76' (23.165 m)
LOOSE SAND	9'-0" (2.743 m)	10'-0" (3.048 m)	8-#6X8'-6" (2.591 m)	#3X85' (25.908 m)	8-#6X9'-6" (2.896 m)	#3X94' (28.651 m)
MEDIUM SAND	8'-3" (2.515 m)	9'-0" (2.743 m)	8-#6X8'-0" (2.438 m)	#3X78' (23.774 m)	8-#6X8'-6" (2.591 m)	#3X85' (25.908 m)
DENSE SAND	7'-9" (2.362 m)	9'-0" (2.743 m)	8-#6X7'-6" (2.286 m)	#3X73' (22.250 m)	8-#6X8'-6" (2.591 m)	#3X85' (25.908 m)
ROCK OR SOLIDIFIED SLAG	5'-0" (1.524 m)	5'-0" (1.524 m)	NONE	NONE	NONE	NONE

BILL OF MATERIAL

MARK	NO.	SIZE	LENGTH	SHAPE
a	10	6	SEE BELOW	—
s	12	4	8'-0" (2.438 m)	▭
s_1	3	3	7'-6" (2.286 m)	▭
v_1	8	6	2'-9" (0.838 m)	—
v_2				

OFFSET SCHEDULE

SEWER DIAM. d IN.	PILE OFFSET from ℄-MED'N FT.	LENGTH of BAR a FT.
UP TO 24" (609.6 mm)	3'-3" (0.991 m)	#6 x 5'-3" (1.600 m)
27" (685.8 m)TO 36" (914.4 mm)	3'-9" (1.143 m)	5'-9" (1.753 m)
42" (1066.8 mm) TO 48" (1219.2 mm)	4'-6" (1.372 m)	6'-6" (1.981 m)
54" (1371.6 mm) TO 60" (1524.0 mm)	5'-0" (1.524 m)	7'-0" (2.134 m)
66" (1676.4 mm) TO 72" (1828.8 mm)	5'-6" (1.676 m)	7'-6" (2.286 m)

NOTES

1. ALL DIMENSIONS ARE IN INCHES (MILLIMETERS) UNLESS OTHERWISE SHOWN.
2. THE ENGINEER SHALL DETERMINE THE CLASS OF SOIL DURING EXCAVATION AND SELECT THE DESIGN DEPTH OF FOUNDATION FROM THE DESIGN TABLE.
3. EXCAVATION OF THE POLE FOUNDATION SHALL BE MADE WITH AN AUGER, 24" (609.6 mm) OR 30" (762.0 mm) IN DIAMETER.
4. THE ANCHOR ROD SHALL BE A HOOK ROD TYPE. COLD BENDING OF THE ANCHOR ROD WILL NOT BE ALLOWED. THE RADIUS OF THE HOOK BEND SHALL NOT BE LESS THAN 4 TIMES THE NOMINAL DIAMETER OF THE ANCHOR ROD. A TACK WELDED ANCHOR ROD MAY BE SUBSTITUTED WITH THE APPROVAL OF THE ENGINEER.
5. THE ANCHOR BOLTS AND RACEWAYS SHALL BE PROPERLY SECURED IN PLACE BEFORE THE CONCRETE IS PLACED IN THE FORM.
6. THE ANCHOR RODS SHALL BE ACCORDING TO ASTM F1554 GRADE 725 (GRADE 105). NUTS SHALL BE HEXAGON NUTS ACCORDING TO ASTM A 194 2H OR ASTM A 563 DH, AND WASHERS SHALL BE ACCORDING TO ASTM F 436.
7. THE CONTRACTOR SHALL COORDINATE EXTENSION OF ANCHOR BOLTS ABOVE TOP OF FOUNDATION WITH THE BREAKAWAY DEVICE MANUFACTURER'S REQUIREMENTS. IF LIGHT POLE IS MOUNTED WITHOUT BREAKAWAY DEVICE, ANCHOR BOLTS SHALL PROJECT 23#4" (69.9 mm) ABOVE TOP OF THE FOUNDATION. THE CONTRACTOR SHALL CONFIRM ANCHOR BOLT EXTENTION WITH ENGINEER.
8. RACEWAYS SHALL PROJECT 1" (25.4 mm) ABOVE THE TOP OF THE FOUNDATION.
9. THE CABLE TRENCH SHALL BE BACKFILLED AND FIRMLY COMPACTED BEFORE THE LIGHT IS ERECTED.

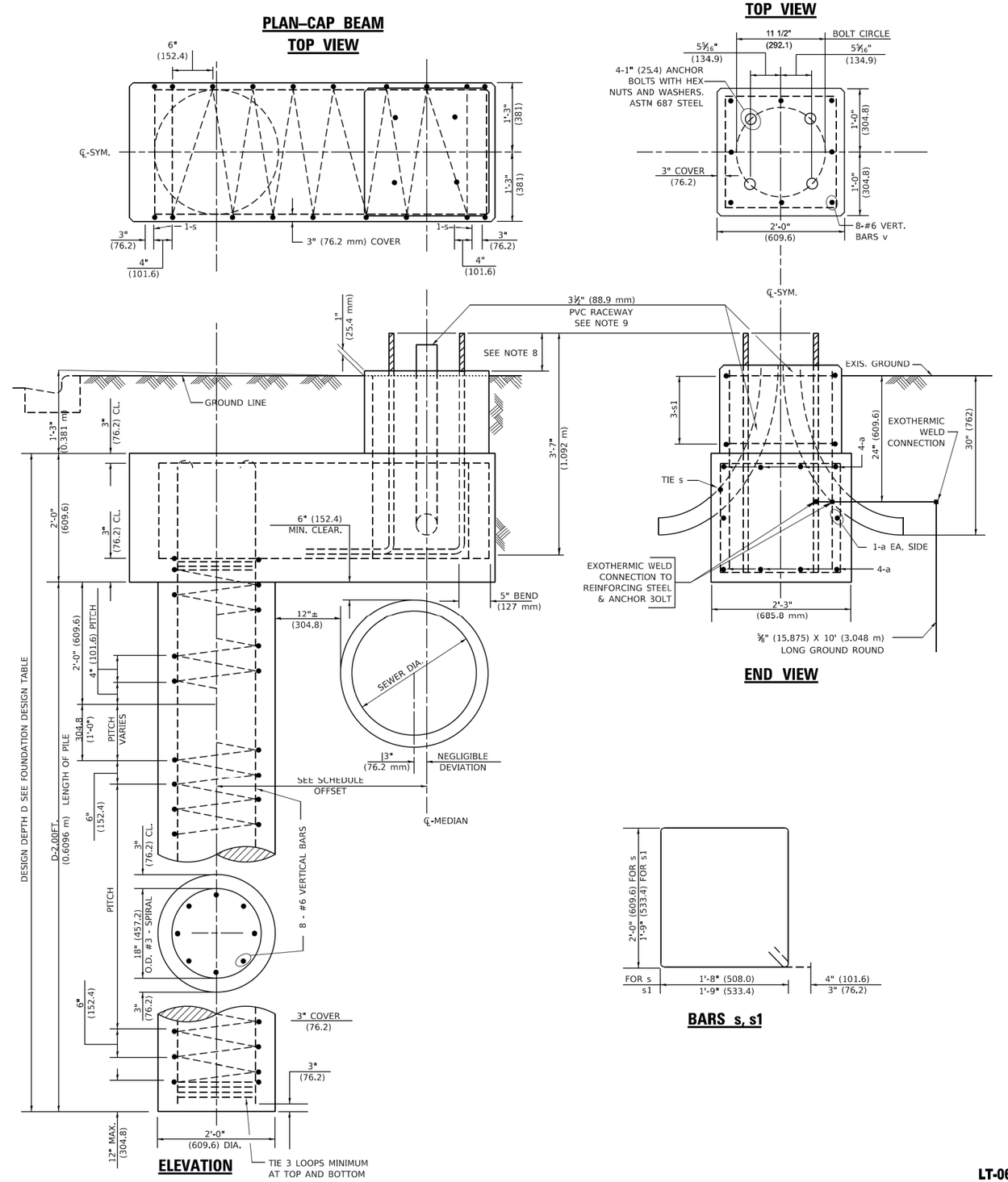

LT-06

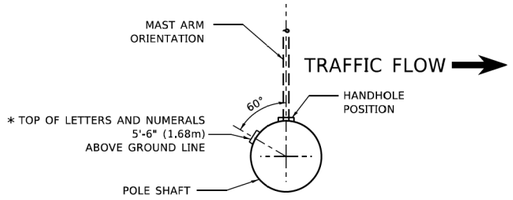

POSITION OF HANDHOLE AND POLE NUMBER FOR SINGLE MAST ARM POLES MOUNTED ON BRIDGE PARAPET OR BARRIER WALL

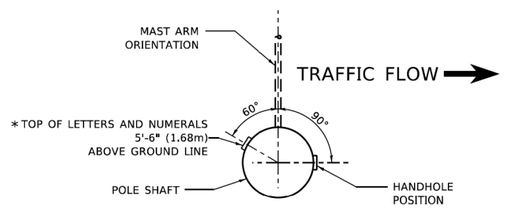

POSITION OF HANDHOLE AND POLE NUMBER FOR SINGLE MAST ARM POLES

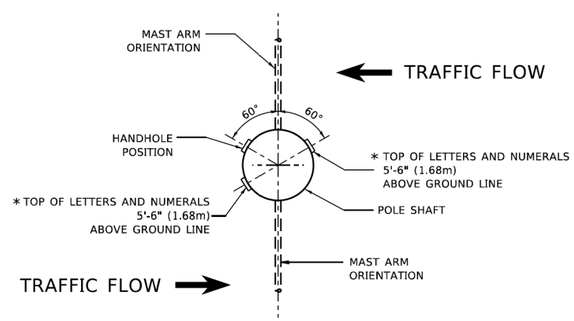

POSITION OF HANDHOLE AND POLE NUMBER FOR TWIN MAST ARM POLES

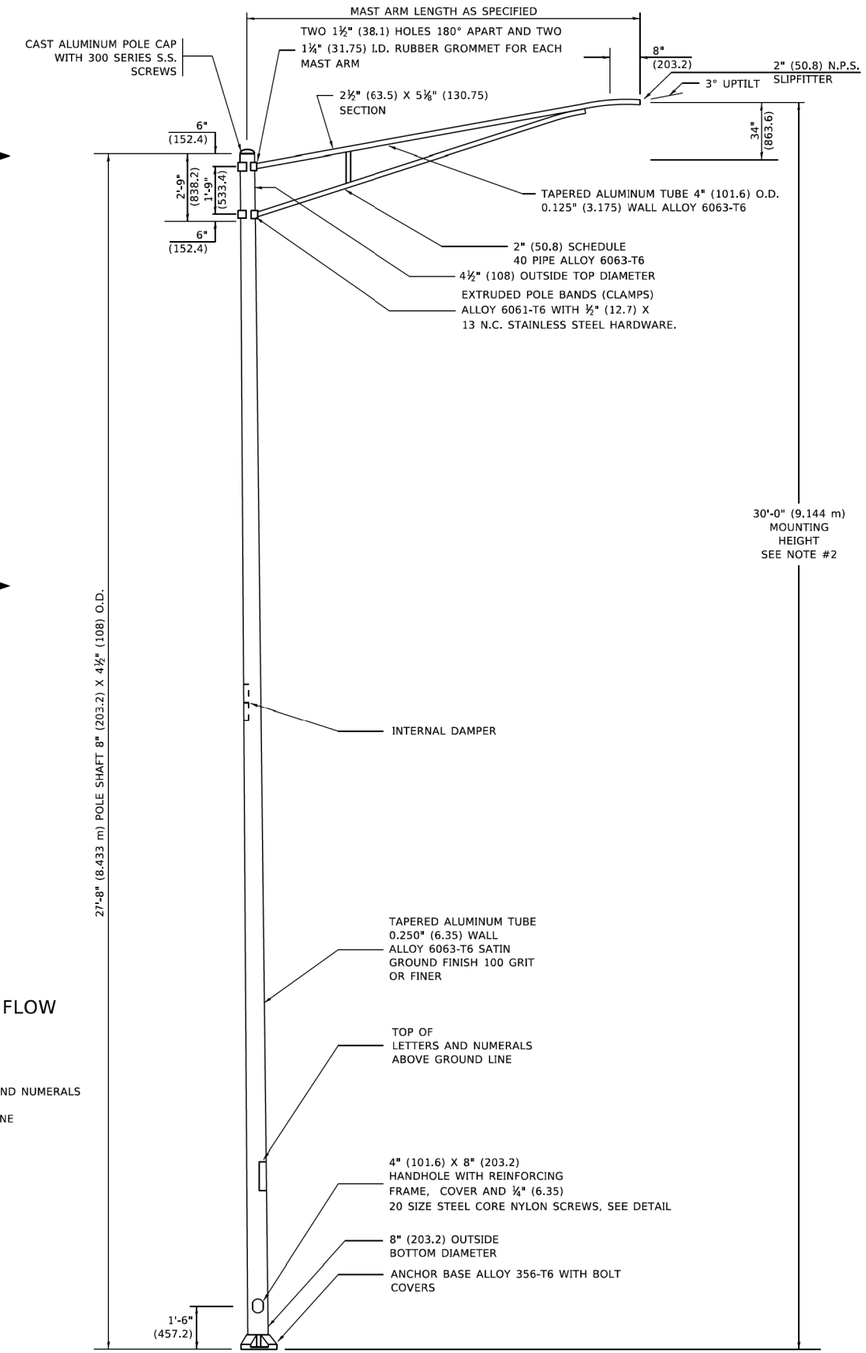

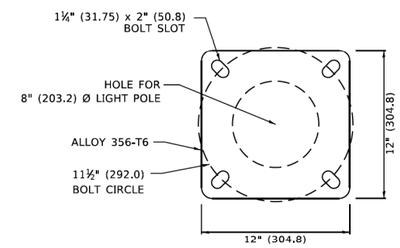

LIGHT POLE BASE PLATE DETAIL

11½" (292.0) BOLT CIRCLE

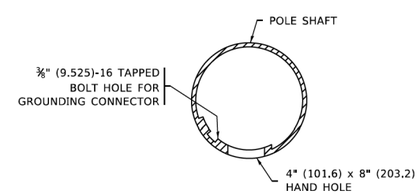

HANDHOLE DETAIL

(N.T.S.)

NOTES

1. ALL DIMENSIONS ARE IN INCHES (MILLIMETERS) UNLESS OTHERWISE SHOWN.
2. MOUNTING HEIGHT IS DEFINED AS THE DISTANCE FROM THE CENTERLINE OF THE TENON TO THE BOTTOM OF THE ANCHOR BASE.
3. THE LIGHT POLE WILL MEET AASHTO DESIGN CRITERIA AS SPECIFIED.
4. THE INSTALLING CONTRACTOR WILL PROVIDE A UL LISTED GROUNDING CONNECTOR. BURNDY K2C23, T&B SP4DL OR APPROVED EQUAL.
5. LIGHT POLES WILL NOT BE INSTALLED WITHOUT MAST ARMS AND LUMINAIRES.
6. LIGHT POLES WILL BE SET PLUMB ON THE FOUNDATION WITHOUT THE USE OF LEVELING NUTS, WASHERS OR SHIMS.
7. LIGHTING UNIT IDENTIFICATION NUMBERS SHALL BE INSTALLED BEFORE THE LIGHTING UNIT IS ENERGIZED.

LT-07

MODEL: Default
FILE NAME: W:\dist\st\22x34\be403.dgn

AMES Engineering, Inc.
CONSULTING ENGINEERS
6330 Belmont Road, Suite 4B
Downers Grove, IL 60516

USER NAME = Lawrence.DeManche	DESIGNED -	REVISED -	R. TOMSONS 09-02-03
	DRAWN -	REVISED -	R. TOMSONS 01-18-13
PLOT SCALE = 100.0000 ' / in.	CHECKED -	REVISED -	06/13/2022 TG
PLOT DATE = 6/27/2022	DATE -	REVISED -	

STATE OF ILLINOIS
DEPARTMENT OF TRANSPORTATION

ALUMINUM LIGHT POLE
30'–0" (9.144 m) MOUNTING HEIGHT

SCALE: NONE | SHEET 7 OF 9 SHEETS | STA. | TO STA.

F.A.U. RTE.	SECTION	COUNTY	TOTAL SHEETS	SHEET NO.
4006			105	69
	BE–403	CONTRACT NO. 61L58		
	ILLINOIS	FED. AID PROJECT		

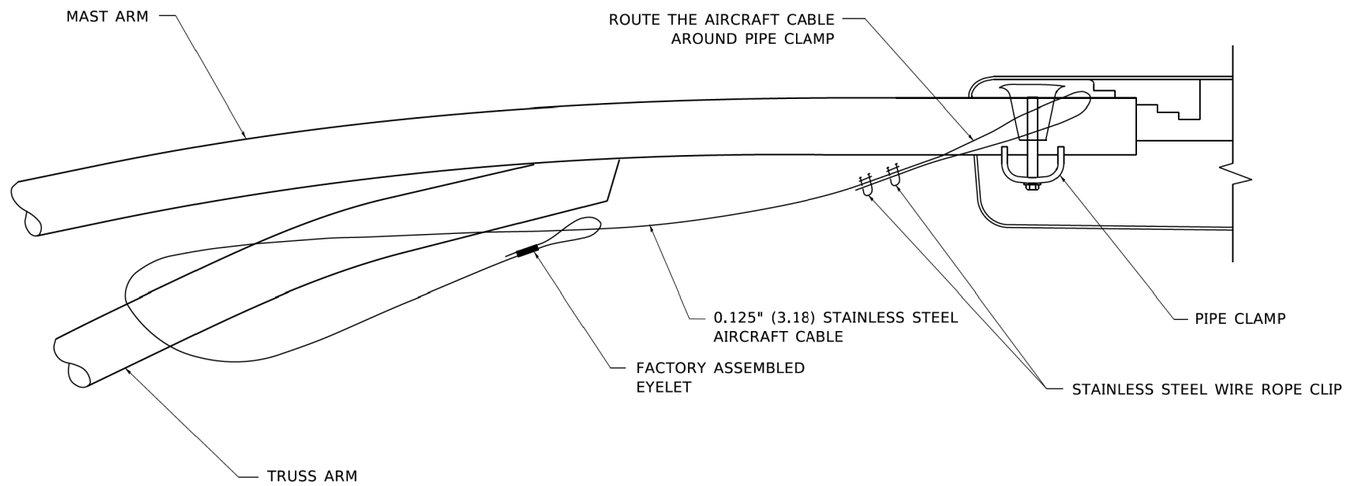

SIDE VIEW (TRUSS ARM)
N.T.S.

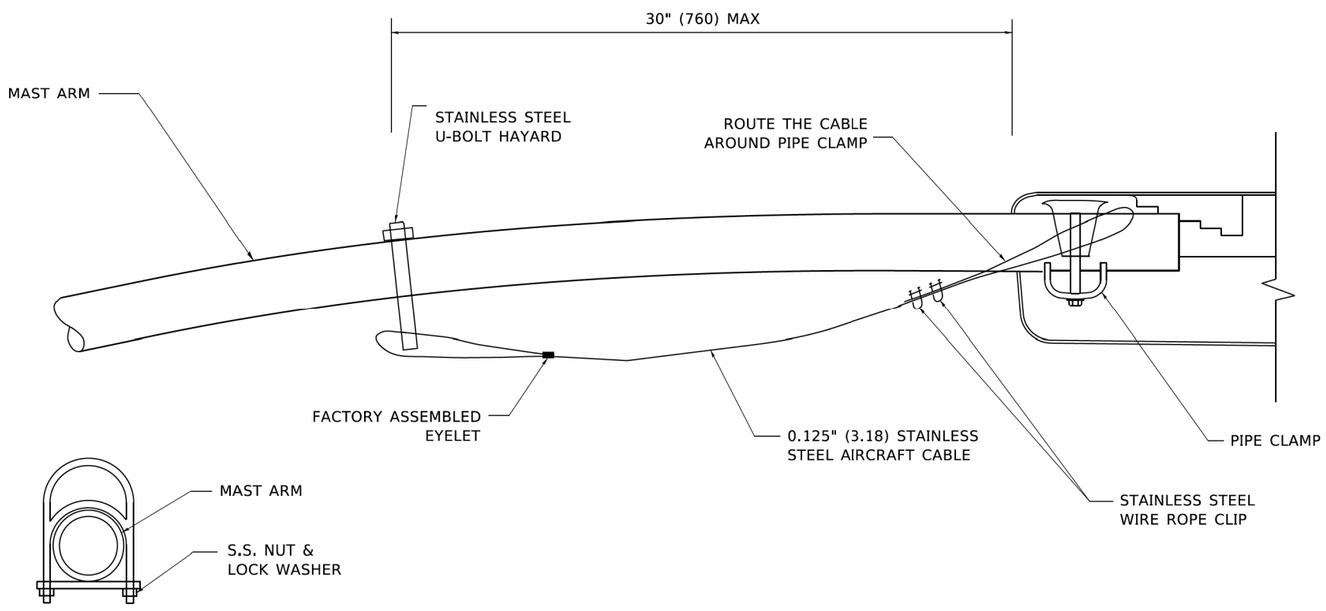

SIDE VIEW (SINGLE MEMBER OR DAVIT ARM)
N.T.S.

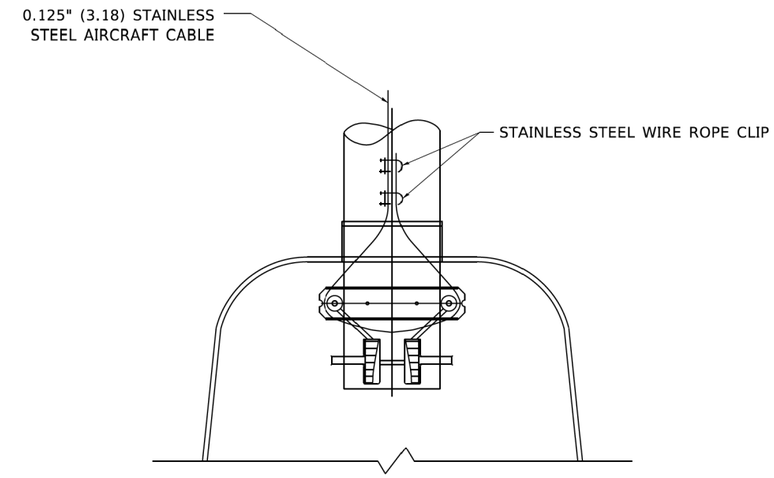

BOTTOM VIEW
N.T.S.

NOTES:

1. ALL DIMENSIONS ARE IN MILLIMETERS (INCHES) UNLESS OTHERWISE SHOWN.
2. CONTRACTOR SHALL ADJUST THE WIRE CLIP TO ELIMINATE ANY SLACK FROM THE WIRE ROPE.
3. THE 0.125" (3.18) STAINLESS STEEL AIRCRAFT CABLE SHALL REMAIN VISIBLE FROM THE GROUND LEVEL.
4. THE BREAKING STRENGTH OF THE CABLE SHALL BE 1700 LBS. MIN.

LT-08

MODEL: Default
FILE NAME: pw:\\planroom.dot.illinois.gov:PWIDOT\Documents\IDOT Offices\District 1\Projects\DistStd22x34\CADData\CADsheets\lt701.dgn

AMES Engineering, Inc.
CONSULTING ENGINEERS
6330 Belmont Road, Suite 4B
Downers Grove, IL 60516

USER NAME = footemj	DESIGNED -	REVISED - 08-08-03	
	DRAWN -	REVISED -	
PLOT SCALE = 50.0000 ' / in.	CHECKED -	REVISED -	
PLOT DATE = 4/19/2019	DATE -	REVISED -	

STATE OF ILLINOIS
DEPARTMENT OF TRANSPORTATION

LUMINAIRE SAFETY CABLE ASSEMBLY

SCALE: NONE | SHEET 18 OF 19 SHEETS | STA. | TO STA.

F.A.U. RTE.	SECTION	COUNTY	TOTAL SHEETS	SHEET NO.
4006			105	70
	BE-701	CONTRACT NO. 61L58		
		ILLINOIS	FED. AID PROJECT	

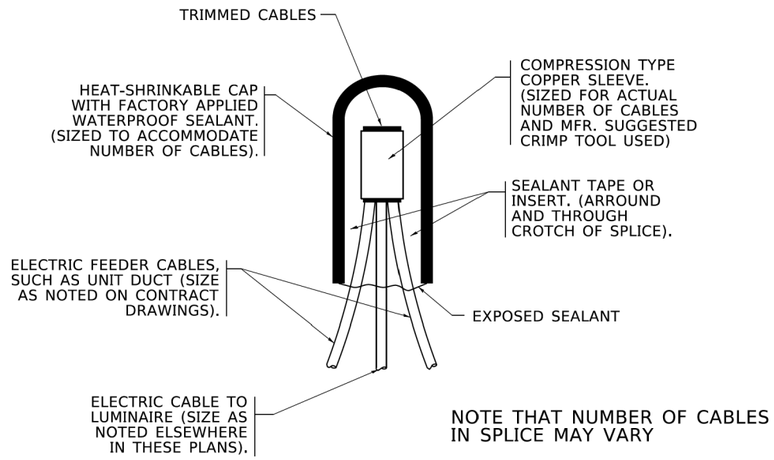

TYPICAL SPLICE DETAIL
N.T.S.

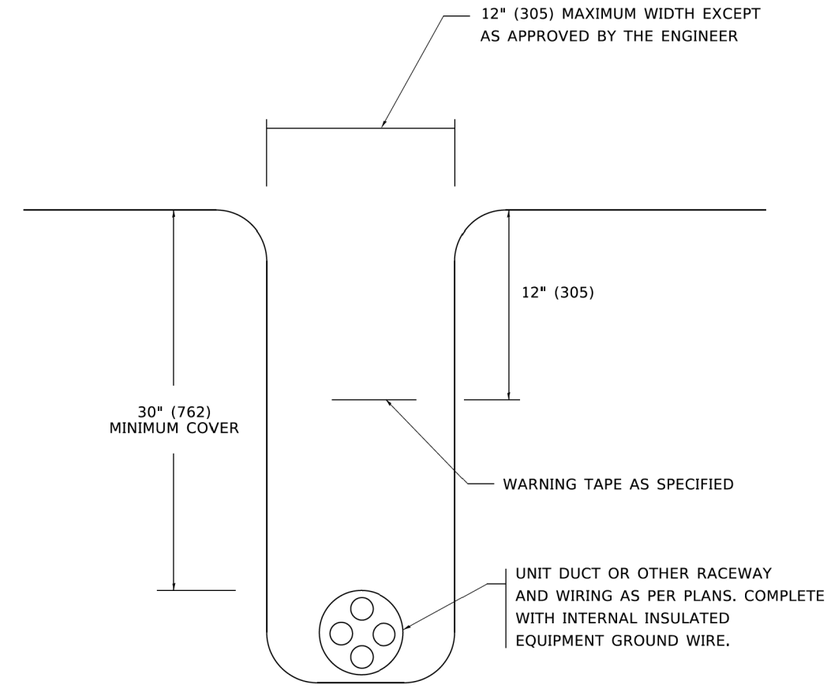

TYPICAL WIRING IN TRENCH DETAIL
N.T.S.

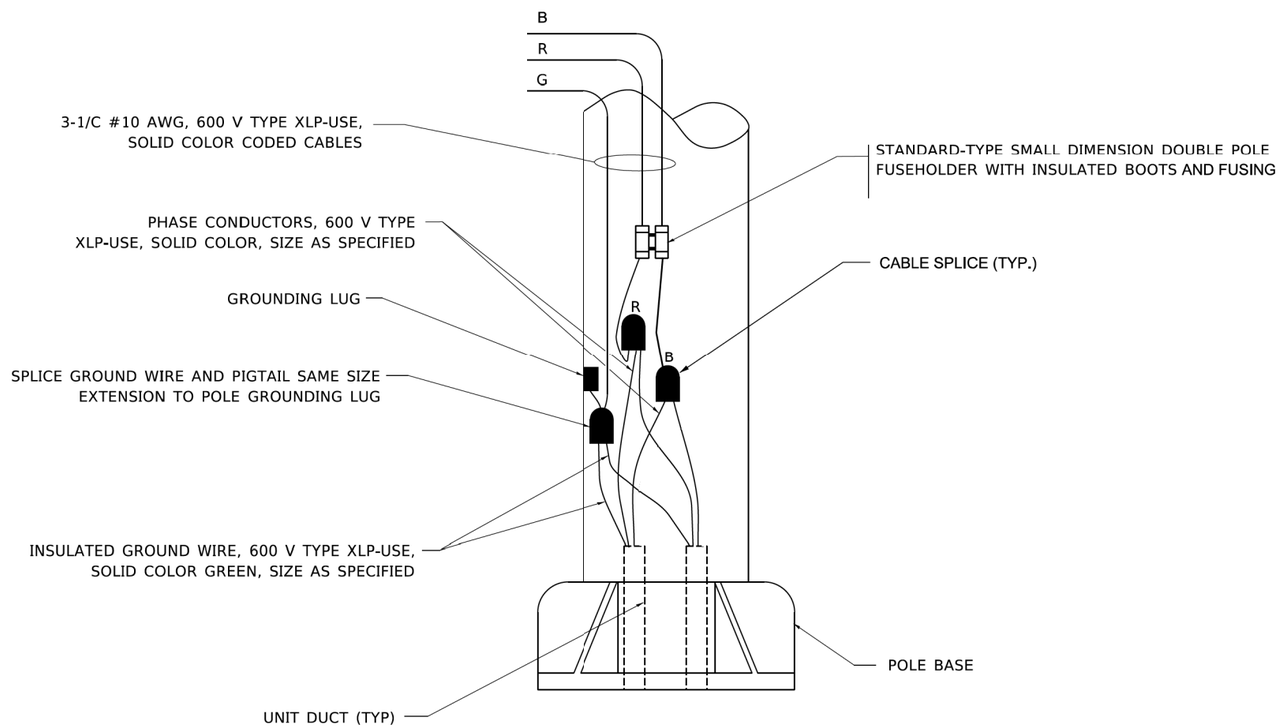

POLE WIRING DETAIL
N.T.S.

LT-09

MODEL: Default
FILE NAME: pw:\\planroom.dot.illinois.gov:PWIDOT\Documents\IDOT Offices\District 1\Projects\Dist5\d2224\CADData\CADSheets\be702.dgn

be702.dgn 3/2/2020 7:37:37 AM User=levsa

AMES Engineering, Inc.
CONSULTING ENGINEERS
6330 Belmont Road, Suite 4B
Downers Grove, IL 60516

USER NAME = levsa	DESIGNED -	REVISED - 02/04/2020	
	DRAWN -	REVISED -	
PLOT SCALE = 50.0000 ' / in.	CHECKED -	REVISED -	
PLOT DATE = 3/2/2020	DATE - 08/08/2003	REVISED -	

STATE OF ILLINOIS
DEPARTMENT OF TRANSPORTATION

MISC. ELECTRICAL DETAILS

SCALE: NONE | SHEET 19 OF 19 SHEETS | STA. | TO STA.

F.A.U. RTE.	SECTION	COUNTY	TOTAL SHEETS	SHEET NO.
4006			105	71
BE-702		CONTRACT NO. 61L58		
		ILLINOIS FED. AID PROJECT		

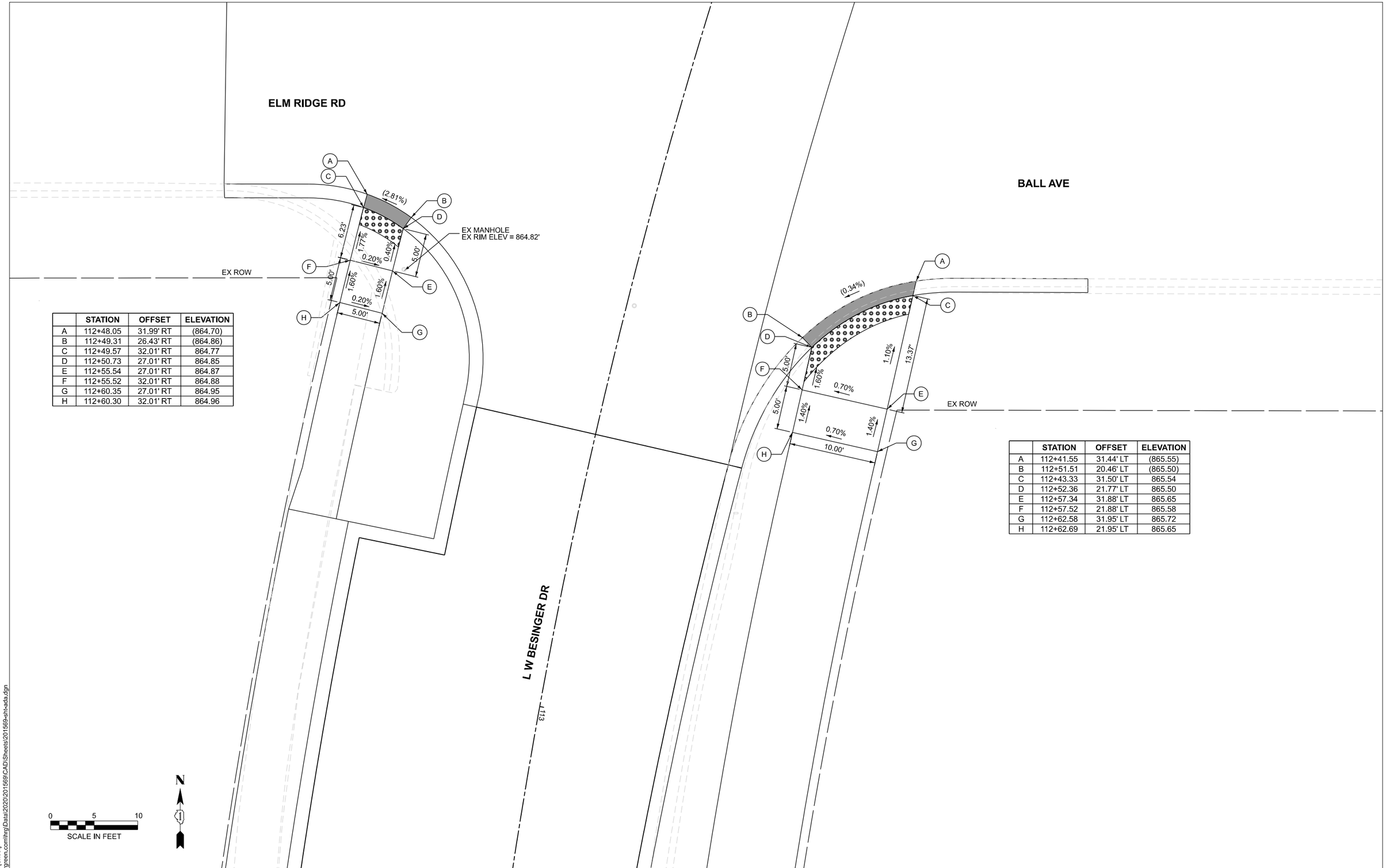

	STATION	OFFSET	ELEVATION
A	112+48.05	31.99' RT	(864.70)
B	112+49.31	26.43' RT	(864.86)
C	112+49.57	32.01' RT	864.77
D	112+50.73	27.01' RT	864.85
E	112+55.54	27.01' RT	864.87
F	112+55.52	32.01' RT	864.88
G	112+60.35	27.01' RT	864.95
H	112+60.30	32.01' RT	864.96

	STATION	OFFSET	ELEVATION
A	112+41.55	31.44' LT	(865.55)
B	112+51.51	20.46' LT	(865.50)
C	112+43.33	31.50' LT	865.54
D	112+52.36	21.77' LT	865.50
E	112+57.34	31.88' LT	865.65
F	112+57.52	21.88' LT	865.58
G	112+62.58	31.95' LT	865.72
H	112+62.69	21.95' LT	865.65

MODEL: ADA-1 [Sheet]
FILE NAME: \\hrgreen.com\hrg\Data\2020\201569\CAD\Sheets\201569-sht-ada.dgn

HRGreen.com
Illinois Professional Design Firm
184-001322
HRGreen

USER NAME = jhorwit	DESIGNED -	REVISED -	
	DRAWN - CL	REVISED -	
PLOT SCALE = 0.16666633 ' / in.	CHECKED -	REVISED -	
PLOT DATE = 6/12/2025	DATE - 6/12/2025	REVISED -	

STATE OF ILLINOIS
DEPARTMENT OF TRANSPORTATION

SIDEWALK RAMP DETAILS
L.W. BESINGER DRIVE

SCALE: SHEET 1 OF 3 SHEETS STA. TO STA.

F.A.U. RTE.	SECTION	COUNTY	TOTAL SHEETS	SHEET NO.
4006	22-00094-00-FP	KANE	105	72

CONTRACT NO. 61L58

ILLINOIS FED. AID PROJECT

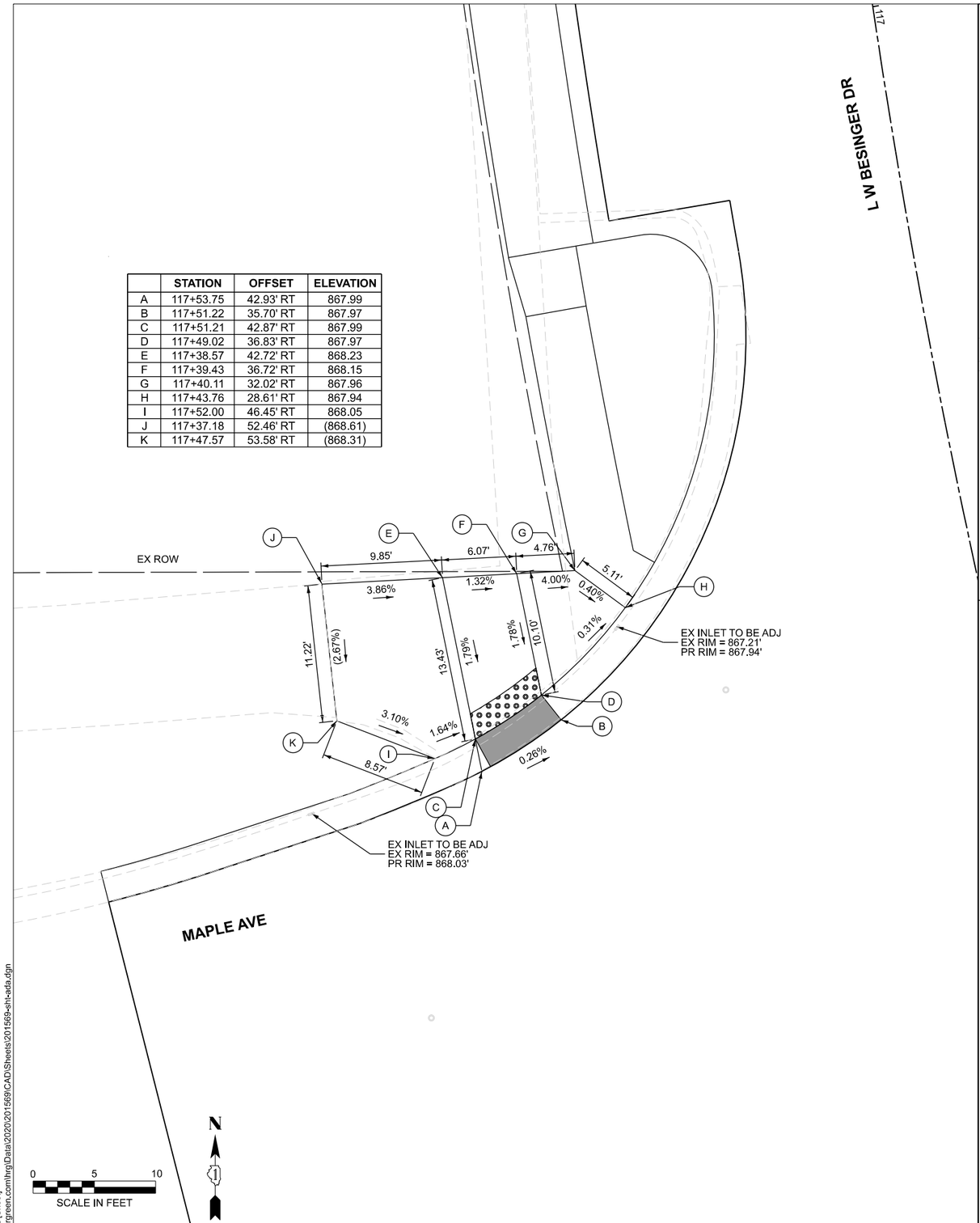

	STATION	OFFSET	ELEVATION
A	117+53.75	42.93' RT	867.99
B	117+51.22	35.70' RT	867.97
C	117+51.21	42.87' RT	867.99
D	117+49.02	36.83' RT	867.97
E	117+38.57	42.72' RT	868.23
F	117+39.43	36.72' RT	868.15
G	117+40.11	32.02' RT	867.96
H	117+43.76	28.61' RT	867.94
I	117+52.00	46.45' RT	868.05
J	117+37.18	52.46' RT	(868.61)
K	117+47.57	53.58' RT	(868.31)

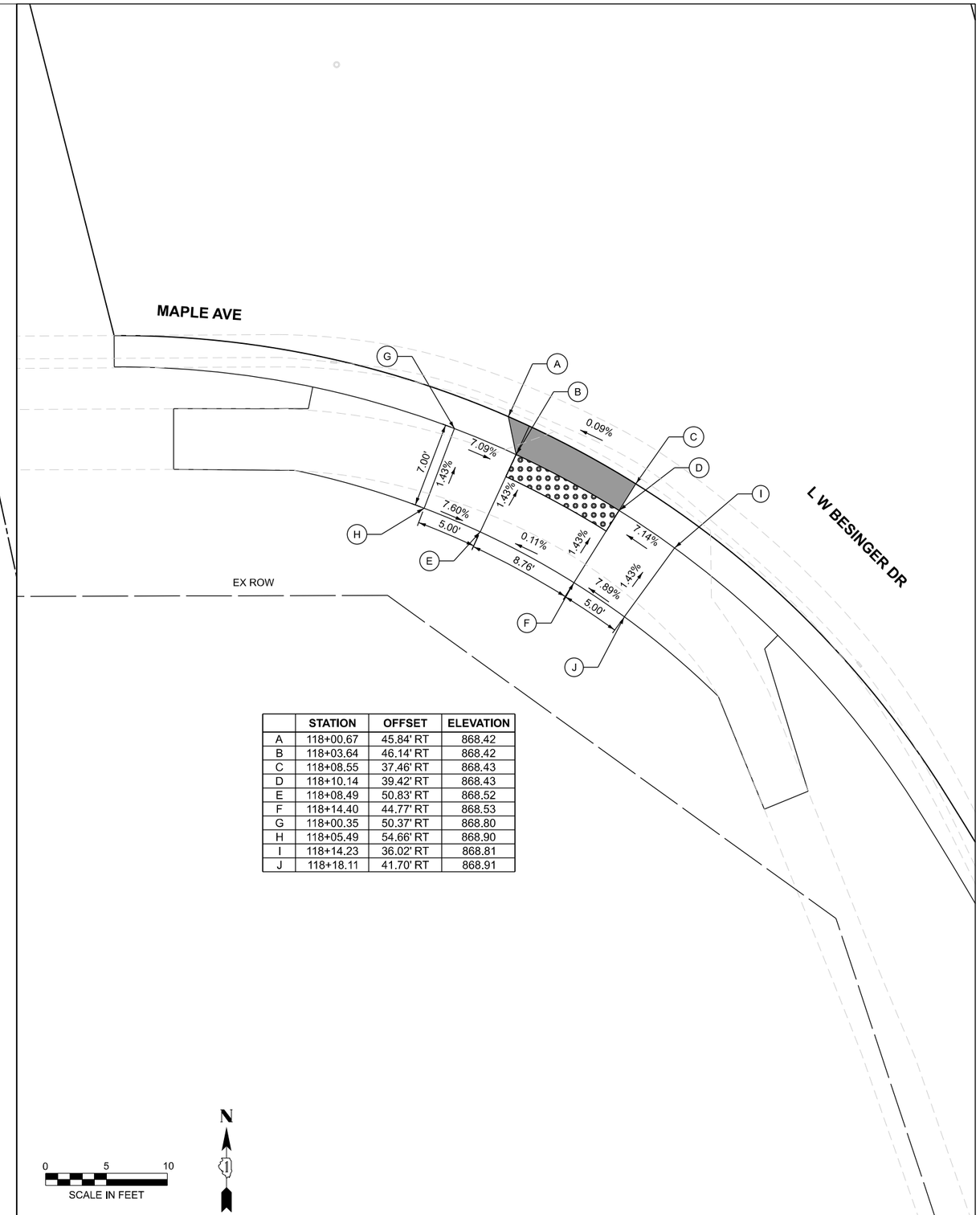

	STATION	OFFSET	ELEVATION
A	118+00.67	45.84' RT	868.42
B	118+03.64	46.14' RT	868.42
C	118+08.55	37.46' RT	868.43
D	118+10.14	39.42' RT	868.43
E	118+08.49	50.83' RT	868.52
F	118+14.40	44.77' RT	868.53
G	118+00.35	50.37' RT	868.80
H	118+05.49	54.66' RT	868.90
I	118+14.23	36.02' RT	868.81
J	118+18.11	41.70' RT	868.91

MODEL: ADA-2 [Sheet]
FILE NAME: \\hrgreen.com\hrg\Data\2020\201569\CAD\Sheets\201569-sht-ada.dgn

HRGreen.com
Illinois Professional Design Firm # 184-001322
HRGreen®

USER NAME = jhorwit	DESIGNED -	REVISED -	
	DRAWN - CL	REVISED -	
PLOT SCALE = 0.16666633 ' / in.	CHECKED -	REVISED -	
PLOT DATE = 6/12/2025	DATE - 6/12/2025	REVISED -	

STATE OF ILLINOIS
DEPARTMENT OF TRANSPORTATION

SIDEWALK RAMP DETAILS
L.W. BESINGER DRIVE

SCALE: | SHEET 2 OF 3 SHEETS | STA. | TO STA.

F.A.U. RTE.	SECTION	COUNTY	TOTAL SHEETS	SHEET NO.
4006	22-00094-00-FP	KANE	105	73
		CONTRACT NO. 61L58		
		ILLINOIS	FED. AID PROJECT	

	STATION	OFFSET	ELEVATION
A	128+61.91	14.00' LT	873.88
B	128+61.91	15.58' LT	873.88
C	128+71.91	14.00' LT	873.80
D	128+71.91	15.58' LT	873.80
E	128+61.91	22.00' LT	873.95
F	128+71.91	22.00' LT	873.87
G	128+61.91	32.00' LT	874.05
H	128+71.91	32.00' LT	873.97

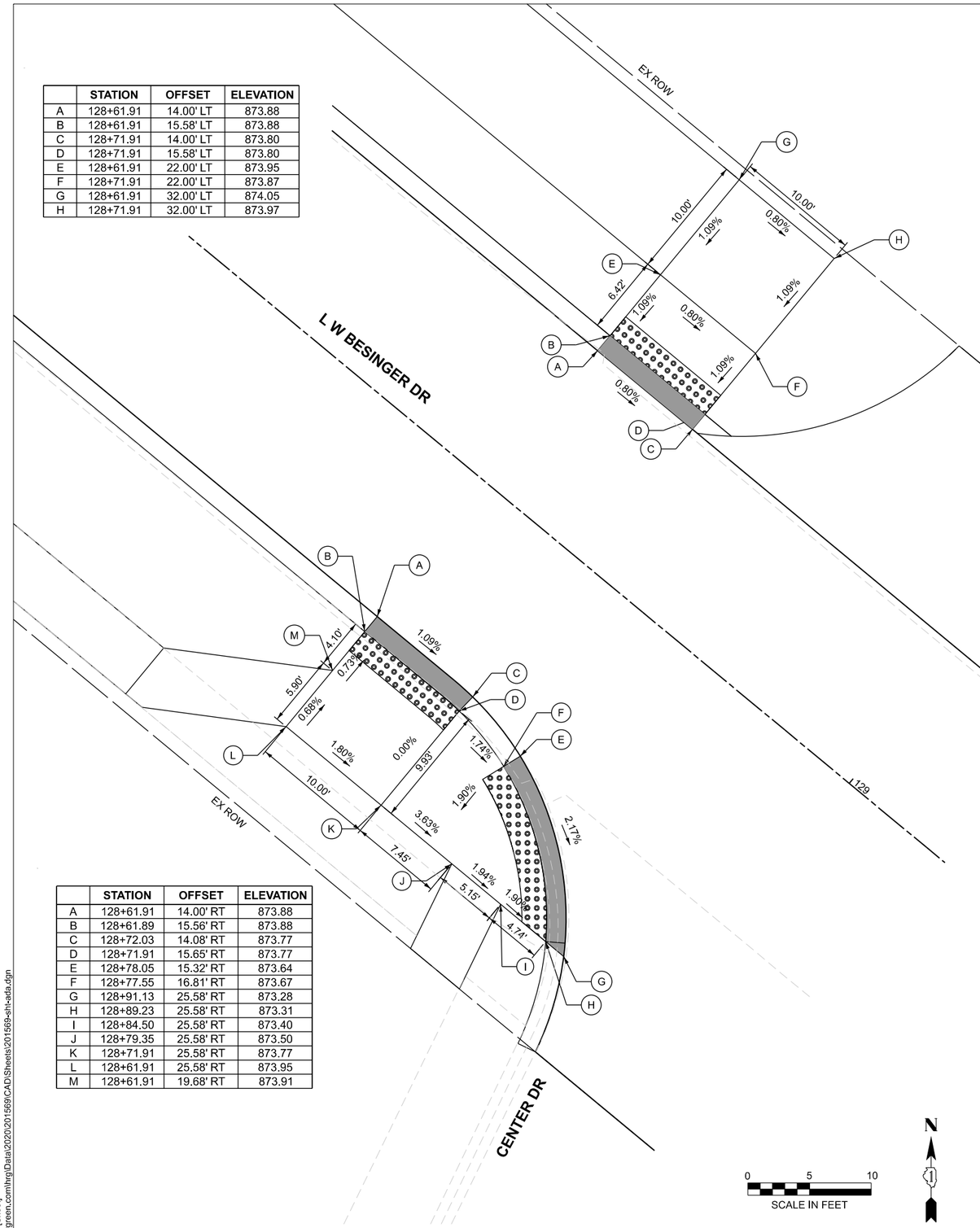

	STATION	OFFSET	ELEVATION
A	128+61.91	14.00' RT	873.88
B	128+61.89	15.56' RT	873.88
C	128+72.03	14.08' RT	873.77
D	128+71.91	15.65' RT	873.77
E	128+78.05	15.32' RT	873.64
F	128+77.55	16.81' RT	873.67
G	128+91.13	25.58' RT	873.28
H	128+89.23	25.58' RT	873.31
I	128+84.50	25.58' RT	873.40
J	128+79.35	25.58' RT	873.50
K	128+71.91	25.58' RT	873.77
L	128+61.91	25.58' RT	873.95
M	128+61.91	19.68' RT	873.91

0 5 10
SCALE IN FEET

N

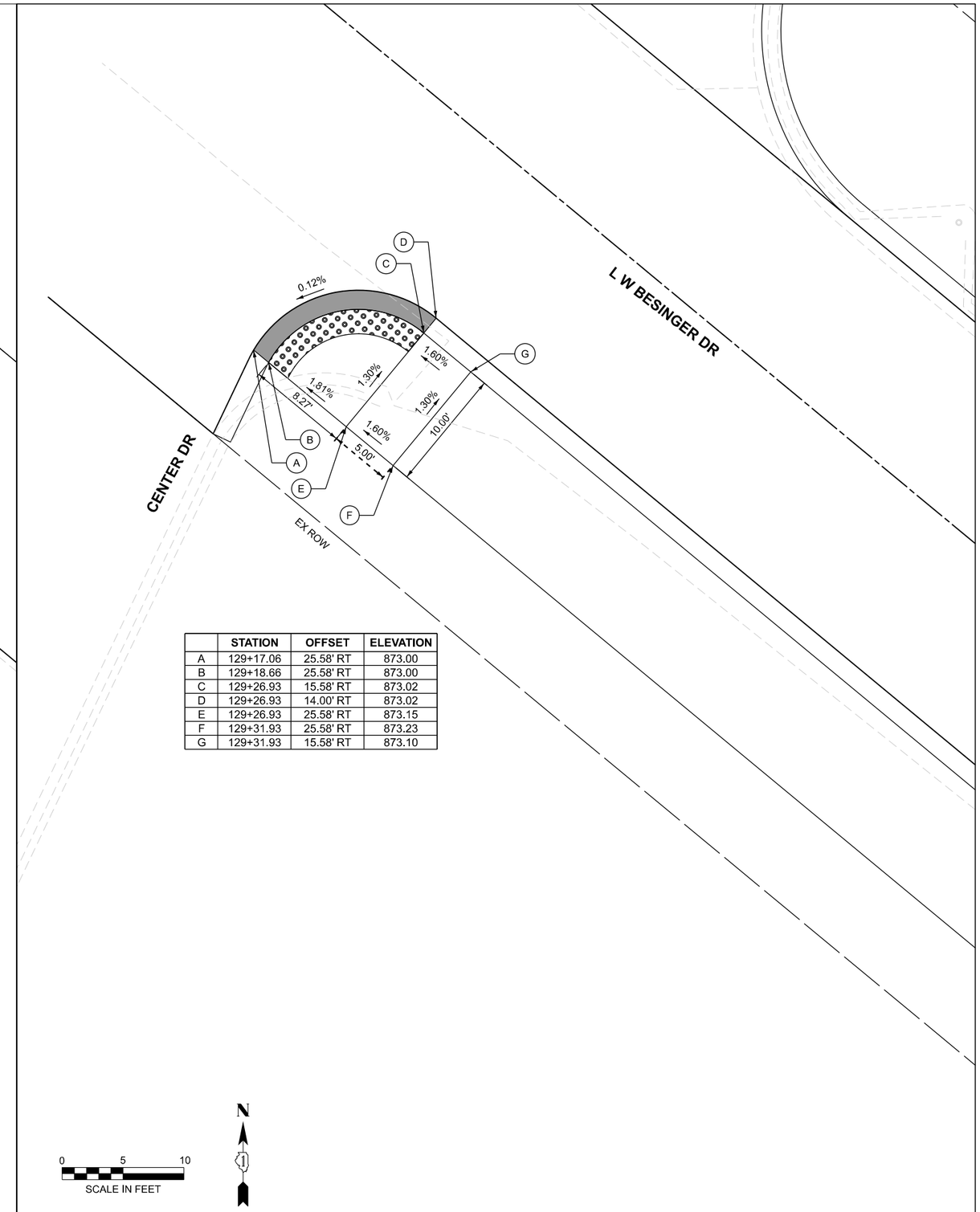

	STATION	OFFSET	ELEVATION
A	129+17.06	25.58' RT	873.00
B	129+18.66	25.58' RT	873.00
C	129+26.93	15.58' RT	873.02
D	129+26.93	14.00' RT	873.02
E	129+26.93	25.58' RT	873.15
F	129+31.93	25.58' RT	873.23
G	129+31.93	15.58' RT	873.10

0 5 10
SCALE IN FEET

N

MODEL: ADA-3 [Sheet]
FILE NAME: \\hrgreen.com\hrg\Data\2020\201569\CAD\Sheets\201569-sht-ada.dgn

HRGreen.com
Illinois Professional Design Firm
184-001322

USER NAME = jhorwit	DESIGNED -	REVISED -	
	DRAWN - CL	REVISED -	
PLOT SCALE = 0.16666633 ' / in.	CHECKED -	REVISED -	
PLOT DATE = 6/12/2025	DATE - 6/12/2025	REVISED -	

STATE OF ILLINOIS
DEPARTMENT OF TRANSPORTATION

SIDEWALK RAMP DETAILS
L.W. BESINGER DRIVE

SCALE: SHEET 3 OF 3 SHEETS STA. TO STA.

F.A.U. RTE.	SECTION	COUNTY	TOTAL SHEETS	SHEET NO.
4006	22-00094-00-FP	KANE	105	74

CONTRACT NO. 61L58

ILLINOIS FED. AID PROJECT

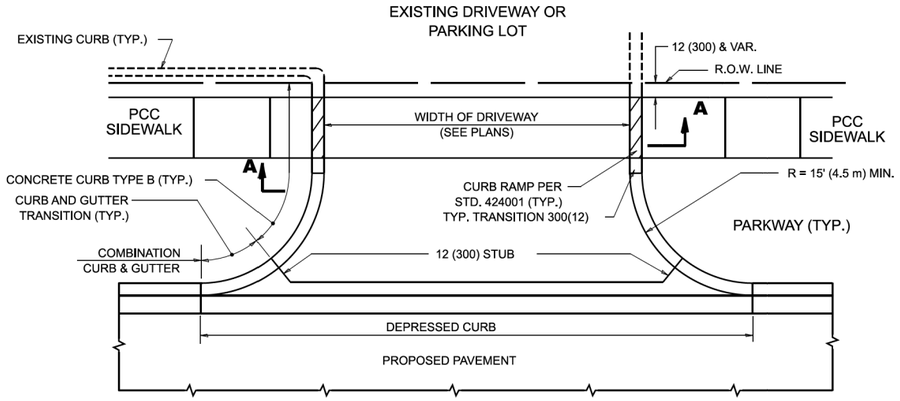

WITH CONCRETE CURB, TYPE B

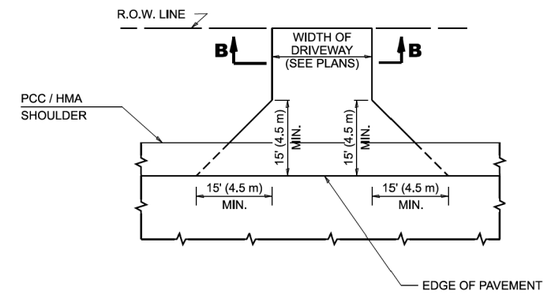

ADJACENT TO PCC / HMA SHOULDER

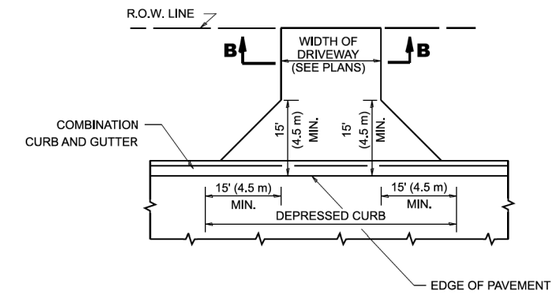

ADJACENT TO CURB AND GUTTER

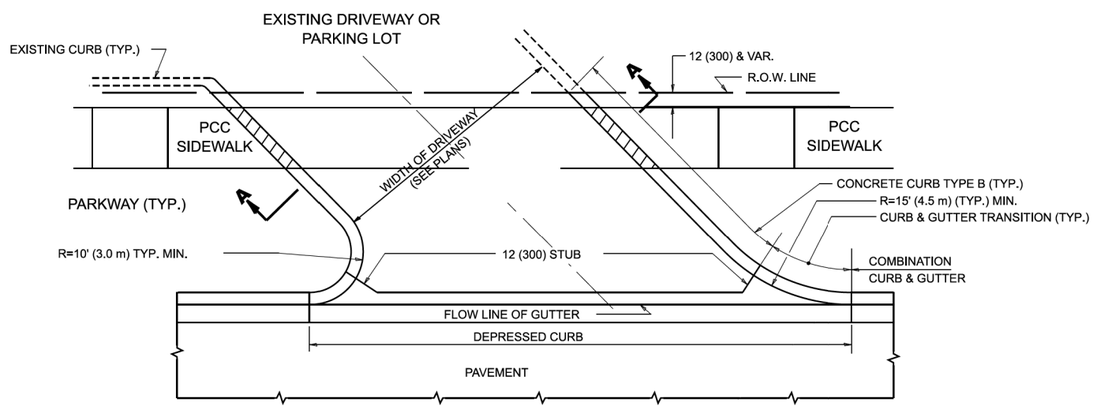

WITH CONCRETE CURB, TYPE B

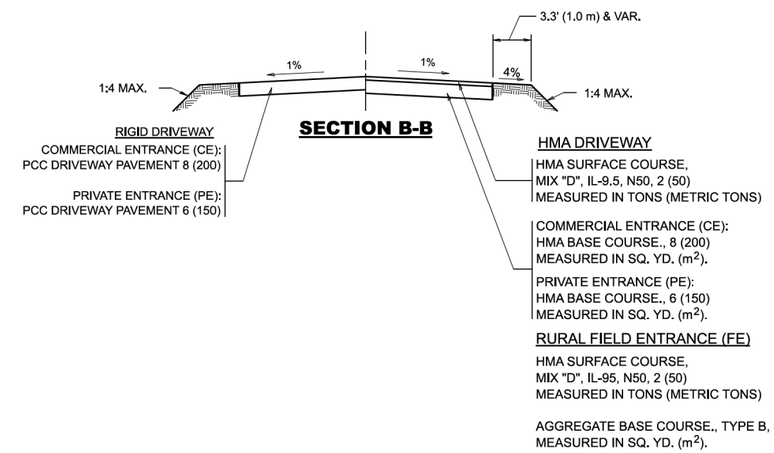

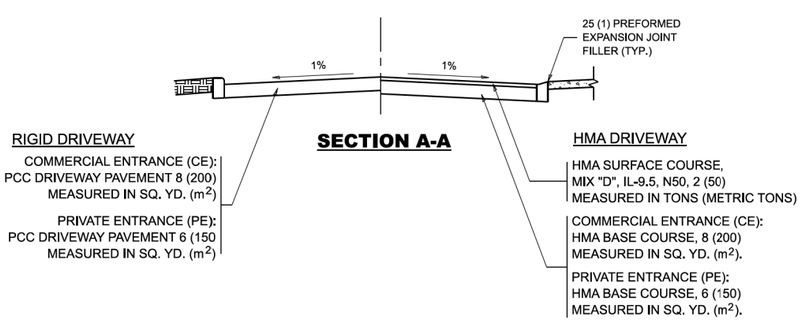

GENERAL NOTES

1. DRIVEWAY SLOPES, LOCATIONS, & GEOMETRIC LAYOUT SHALL BE IN ACCORDANCE WITH THE LATEST EDITION OF THE "HANDBOOK FOR POLICY ON PERMITS FOR ACCESS DRIVEWAYS TO STATE HIGHWAYS". FOR FURTHER LAYOUT REQUIREMENTS, REFER TO ILLUSTRATIONS IN THE PERMIT HANDBOOK. DRIVEWAYS SHALL BE REPLACED IN KIND, UNLESS OTHERWISE NOTED ON THE PLANS.

2. COMMERCIAL DRIVEWAYS SHALL BE CONSTRUCTED WITH CONCRETE CURB, TYPE B RETURNS EXCEPT WHEN THE SIDEWALK EDGE IS 4 FEET (1.2 METERS) OR LESS FROM THE BACK OF CURB, CONSTRUCT A FLARE DRIVEWAY WITHOUT CURB.

ALL DIMENSIONS ARE IN INCHES (MILLIMETERS) UNLESS OTHERWISE NOTED.

MODEL: Plan Single [Sheet]
FILE NAME: Z:_IDOTCAD_ORD Folder Master_Master Files\IDOTCAD_CONNECT\Configuration\Organization-Civil\IDOT_Standards\Dgnlib\Sheet Seeds\Civil_Named_Boundary_SheetSeeds.dgnlib

HRGreen.com
Illinois Professional Design Firm # 184-001322

USER NAME = eric.l.thomas	DESIGNED - R. SHAH	REVISED - R. BORO 06-11-08	
	DRAWN -	REVISED - R. BORO 09-06-11	
PLOT SCALE = 0.08333317 ' / In.	CHECKED -	REVISED - K. SMITH 08-28-19	
PLOT DATE = 8/30/2023	DATE - 11-04-95	REVISED - K. SMITH 11-18-22	

STATE OF ILLINOIS
DEPARTMENT OF TRANSPORTATION

DRIVEWAY DETAILS - DISTANCE BETWEEN R.O.W. AND FACE OF CURB & EDGE OF SHOULDER >15'(4.5m)

SCALE: NONE | SHEET 1 OF 1 SHEETS | STA. TO STA.

F.A.U. RTE.	SECTION	COUNTY	TOTAL SHEETS	SHEET NO.
4006	22-00094-00-FP	KANE	105	75
BD400-01 (BD-01)		CONTRACT NO. 61L58		
		ILLINOIS	FED. AID PROJECT	

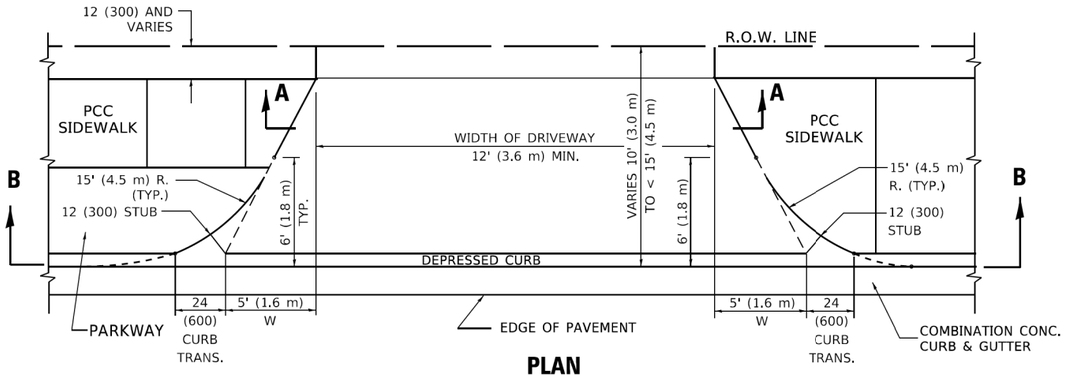

PLAN

10' (3.0 m) TO < 15' (4.5 m)

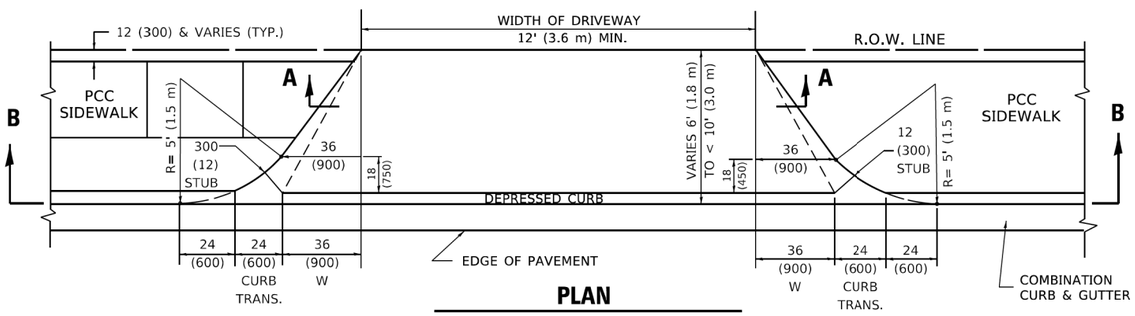

PLAN

6' (1.8 m) TO < 10' (3.0 m)

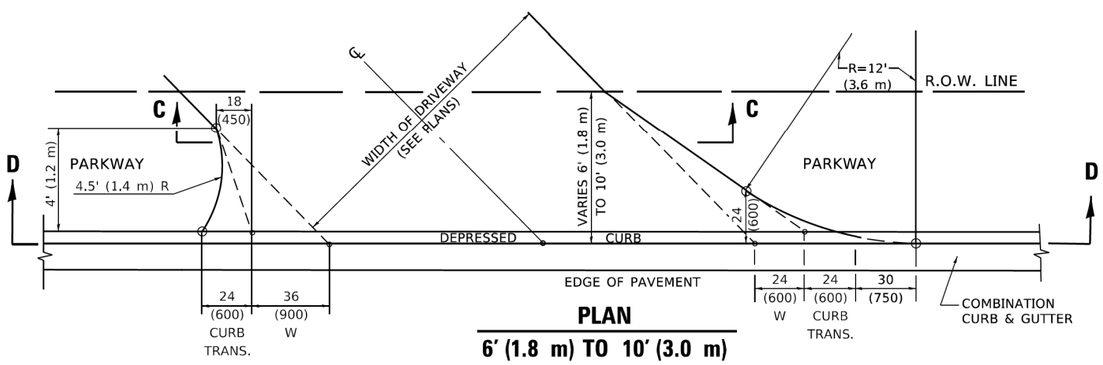

PLAN

6' (1.8 m) TO 10' (3.0 m)

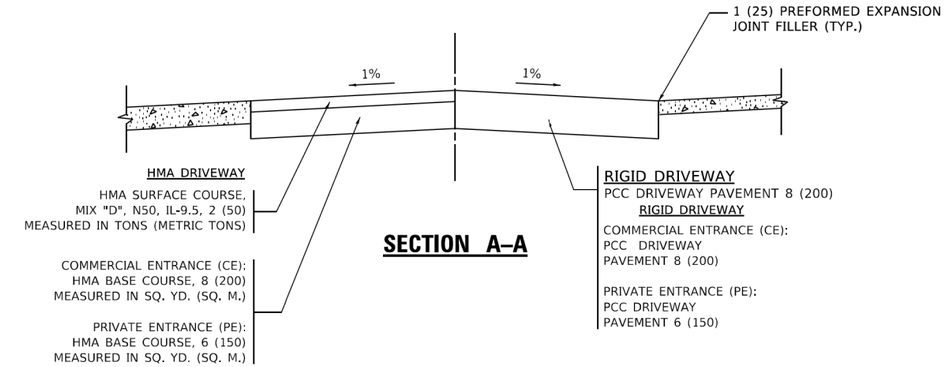

SECTION A–A

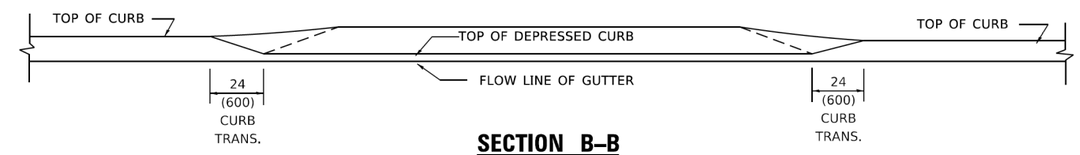

SECTION B–B

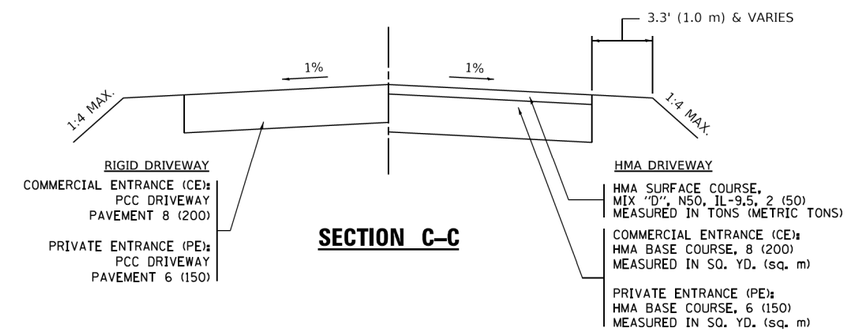

SECTION C–C

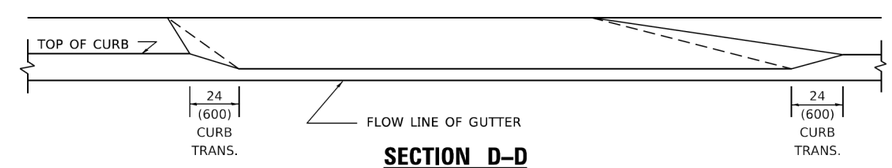

SECTION D–D

GENERAL NOTES

1. DRIVEWAY SLOPES, LOCATIONS, & GEOMETRIC LAYOUT SHALL BE IN ACCORDANCE WITH THE LATEST EDITION OF THE "HANDBOOK FOR POLICY ON PERMITS FOR ACCESS DRIVEWAYS TO STATE HIGHWAYS". FOR FURTHER LAYOUT REQUIREMENTS, REFER TO ILLUSTRATION 10 IN THE PERMIT HANDBOOK. WHERE SIDEWALKS EXIST, DRIVEWAYS SHALL BE REPLACED WITH RIGID PAVEMENT. WHERE NO SIDEWALKS EXIST, DRIVEWAYS SHALL BE REPLACED IN KIND. SIDEWALK CROSS SLOPE THRU DRIVEWAY AREA TO BE A MAXIMUM OF 1:50.
2. WHEN THE DISTANCE BETWEEN R.O.W. AND THE BACK OF CURB IS EQUAL TO OR LESS THAN 8' (2.4 m), THE PCC SIDEWALK SHALL EXTEND TO THE BACK OF CURB.
3. "W" VARIES FROM 36 (900) TO 5' (1.5 m) PROPORTIONAL TO THE LENGTH (L), FROM 6' (1.8 m) TO 10' (3 m).

ALL DIMENSIONS ARE IN INCHES (MILLIMETERS) UNLESS OTHERWISE NOTED.

MODEL: Default
FILE NAME: pw:\\ildot-pw.bentley.com:PWIDOT\Documents\IDOT Offices\District 1\Projects\District\d22x34\CADData\CADsheets\bd02.dgn

HRGreen.com
Illinois Professional Design Firm # 184-001322

USER NAME = Lawrence,DeManche	DESIGNED - R. SHAH	REVISED - R. BORO 01-01-07	STATE OF ILLINOIS DEPARTMENT OF TRANSPORTATION	DRIVEWAY DETAILS DISTANCE BETWEEN ROW AND FACE OF CURB < 15' (4.5m)
	DRAWN -	REVISED - R. BORO 09-06-11		
PLOT SCALE = 100.0000 ' / in.	CHECKED -	REVISED - K. SMITH 08-27-19		
PLOT DATE = 11/18/2022	DATE - 11-06-95	REVISED - K. SMITH 11-18-22		SCALE: NONE SHEET 1 OF 1 SHEETS STA. TO STA.

F.A.U. RTE.	SECTION	COUNTY	TOTAL SHEETS	SHEET NO.
4006	22-00094-00-FP	KANE	105	76
BD400–02 (BD–02)		CONTRACT NO.	61L58	
		ILLINOIS FED. AID PROJECT		

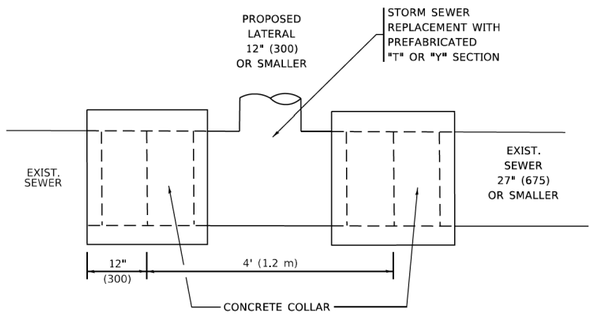

DETAIL "A"

LATERAL CONNECTION TO EXISTING SEWER
OF 27" (675) OR SMALLER

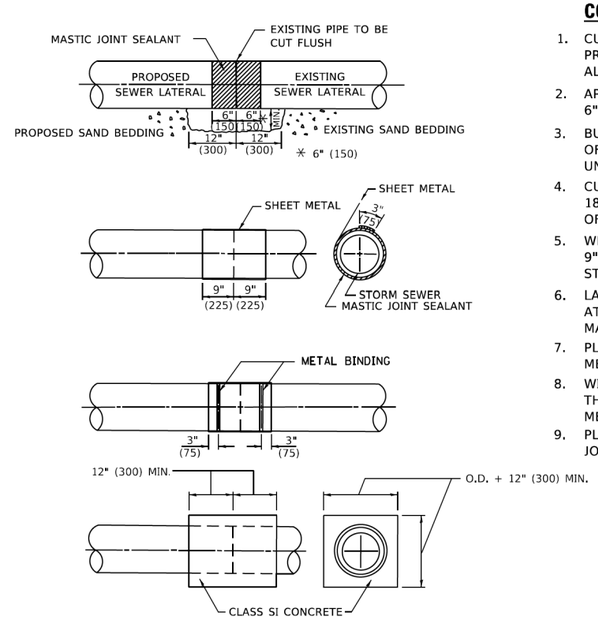

DETAIL "B"

CLASS SI CONCRETE COLLAR

CONSTRUCTION SEQUENCE

1. CUT THE EXISTING END OF THE PIPE SO AS TO PRESENT A FLUSH BUTT JOINT. BRUSH AND CLEAN ALL PIPES.
2. APPLY THE MASTIC JOINT SEALANT TO THE FIRST 6" (150) OF EACH PIPE.
3. BUTT THE PIPES TOGETHER LEAVING A MINIMUM OF 12' x 6' (300 x 150) DEEP EXCAVATION UNDER AND AROUND EACH PIPE END.
4. CUT A PIECE OF SHEET METAL GAGE NO. 19 1.1 (0.0418) 18" (450) WIDE BY THE OUTSIDE CIRCUMFERANCE OF THE PIPE PLUS 3" (75) LONG.
5. WRAP THE SHEET METAL AROUND THE PIPES, 9" (225) ON EACH SIDE OF THE JOINT, STARTING AT THE TOP OF THE PIPE.
6. LAP THE SHEET METAL AT LEAST 3" (75) AT THE TOP OF THE PIPE AND PLACE THE MASTIC JOINT SEALANT BETWEEN THE LAP.
7. PLACE TWO METAL BANDS AROUND THE SHEET METAL AND TIGHTEN.
8. WIPE OFF ANY EXCESS MASTIC JOINT SEALANT THAT OOZES OUT FROM BETWEEN THE SHEET METAL AND THE PIPES.
9. PLACE CLASS SI CONCRETE AROUND THE JOINT.

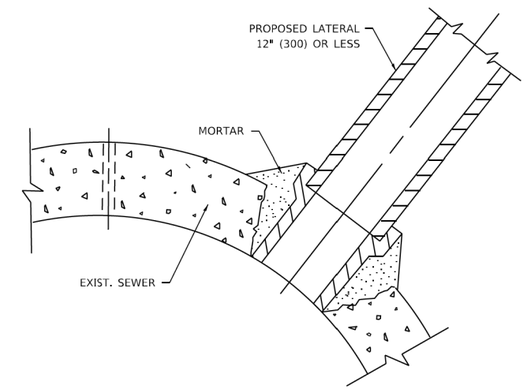

DETAIL "C"

PROPOSED LATERAL
CONNECTION TO EXISTING SEWER
OF 30" (750) OR LARGER

NOTES:

MATERIAL

MATERIAL USED FOR THE TEE OR WYE SECTION SHALL BE COMPATIBLE WITH THE EXISTING STORM SEWER OR THE PROPOSED STORM SEWER.

CONSTRUCTION METHODS

I. THIS WORK SHALL BE CONSTRUCTED IN CONFORMANCE WITH THE APPLICABLE PORTIONS OF SECTION 550 OF THE STANDARD SPECIFICATIONS.

II. CONNECTION TO AN EXISTING STORM SEWER SHALL BE BY EITHER OF THE FOLLOWING METHODS:
A) PROPOSED STORM SEWER CONNECTION TO EXISTING SEWER OF 27" (675) OR SMALLER SEE DETAIL "A" AND "B".
B) PROPOSED STORM SEWER CONNECTION TO EXISTING SEWER OF 30" (750) OR LARGER SEE DETAIL "C".

IF THE EXISTING SEWER PIPE IS CRACKED, BROKEN OR OTHERWISE DAMAGED BY THE CONTRACTOR IN MAKING THE CIRCULAR OPENING, THE CONTRACTOR SHALL REPLACE THAT SECTION OF PIPE WITH PIPE EQUAL AND SIMILAR IN ALL RESPECTS TO THE PIPE IN THE EXISTING SEWER, IN A CAREFUL WORKMANLIKE MANNER, WITHOUT EXTRA COMPENSATION.

GENERAL

1. CARE MUST BE TAKEN TO PREVENT DEBRIS FROM ENTERING THE SEWER. ALL DEBRIS WHICH ENTERS THE SEWER MUST BE REMOVED. THE SEWER MUST BE LEFT CLEAN AND UNOBSTRUCTED UPON COMPLETION OF THE CONTRACT.
2. CARE MUST BE TAKEN TO PREVENT ANY PART OF THE NEW PIPE CONNECTION FROM PROJECTING INTO THE EXISTING SEWER.

BASIS OF PAYMENT

1. TEE OR WYE CONNECTIONS SHALL BE PAID FOR AT THE CONTRACT UNIT PRICE EACH FOR STORM SEWER TEE OR WYE OF THE TYPE AND SIZE SPECIFIED IN THE PLANS. THIS PRICE SHALL INCLUDE ALL EXCAVATION OF THE TRENCH, REMOVAL OF THE EXISTING STORM SEWER, FURNISHING AND INSTALLING THE SPECIFIED TEE OR WYE SECTION, FURNISHING AND INSTALLING THE REQUIRED CONCRETE COLLAR, AND ALL OTHER MATERIAL NECESSARY TO COMPLETE THIS WORK AS SHOWN AND SPECIFIED.
2. REMOVAL AND REINSTALLATION OF EXISTING STORM SEWER ADJACENT TO THE PROPOSED TEE OR WYE SECTION, FOR THE PURPOSE OF FACILITATING THE INSTALLATION OF THE TEE OR WYE SECTION, WILL NOT BE PAID FOR SEPARATELY BUT SHALL BE INCLUDED IN THE UNIT PRICE BID FOR THE WORK.
3. TRENCH BACKFILL, EXCAVATION IN ROCK AND REMOVAL AND REPLACEMENT OF UNSUITABLE MATERIAL BELOW PLAN BEDDING GRADE WILL BE PAID FOR SEPARATELY.
4. CONCRETE COLLAR FOR CONNECTING A PROPOSED STORM SEWER TO AN EXISTING STORM SEWER WILL NOT BE PAID PAID FOR SEPARATELY BUT SHALL BE INCLUDED IN THE COST OF THE PROPOSED STORM SEWER.

* ALL DIMENSIONS ARE IN INCHES (MILLIMETERS) UNLESS OTHERWISE SHOWN.

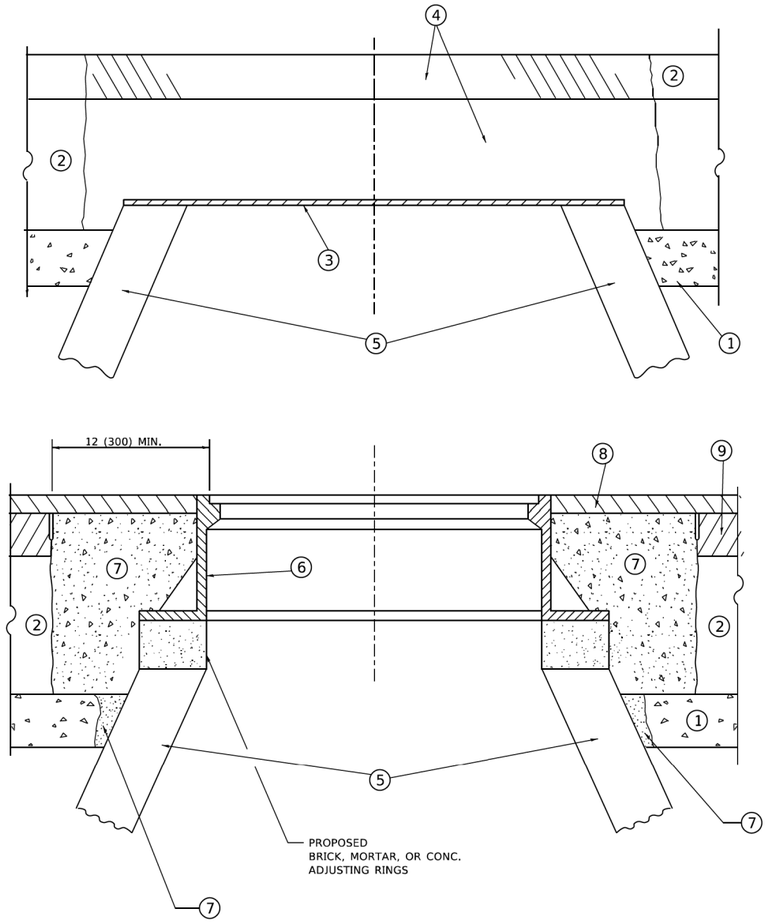

DETAILS FOR FRAMES AND LIDS ADJUSTMENT WITH MILLING

NOTES

1. EXISTING BROKEN FRAMES AND LIDS SHALL BE REMOVED AND DISPOSED OF BY THE CONTRACTOR AND SHALL BE REPLACED AS DIRECTED BY THE ENGINEER. REPLACEMENT FRAMES AND LIDS WILL BE PAID FOR IN ACCORDANCE WITH ARTICLE 109.04 OF THE STANDARD SPECIFICATIONS UNLESS A SEPARATE PAY ITEM HAS BEEN PROVIDED.

2. IF THE EXISTING LIDS ARE OPEN, THE FRAME WILL BE ADJUSTED TO THE ELEVATION OF THE MILLED PAVEMENT SURFACE PRIOR TO THE MILLING OPERATION. THE FRAME WILL NOT BE REMOVED AND COVERED BY THE METAL PLATE.

3. CITY OF CHICAGO CASTINGS ARE THE PROPERTY OF THE CITY AND THE CONTRACTOR SHALL NOTIFY THE CITY FOR REMOVAL AND DISPOSITION OF THE CASTINGS.

4. THE METAL PLATE USED TO COVER THE STRUCTURE SHALL REMAIN THE PROPERTY OF THE CONTRACTOR.

5. THE CONTRACTOR SHALL REMOVE ALL TRAFFIC CONTROL DEVICES BY THE END OF EACH WORK SHIFT.

CONSTRUCTION PROCEDURES

STAGE 1 (BEFORE PAVEMENT MILLING)

A) REMOVE A MINIMUM OF 12 (300) OF THE PAVEMENT FROM AROUND THE STRUCTURE.

B) REMOVE THE EXISTING FRAME AND LID FROM THE STRUCTURE.

C) COVER THE STRUCTURE OPENING WITH A 36 (900) DIAMETER METAL PLATE.

D) BACKFILL WITH CRUSHED STONE AND HMA SURFACE MIX APPROVED BY THE ENGINEER. (MIN. 3 (80) HMA TO REMAIN AFTER MILLING).

STAGE 2 (AFTER PAVEMENT MILLING)

A) REMOVE THE HMA SURFACE MIX AND CRUSHED STONE.

B) INSTALL THE FRAME AND LID; ADJUST THE FRAME TO ITS FINAL SURFACE ELEVATION.

C) THE SURROUNDING SPACE SHALL BE FILLED WITH CLASS PP-2* CONCRETE TO THE ELEVATION OF THE SURFACE OF THE EXISTING BASE COURSE OR THE BINDER COURSE.

*UNLESS OTHERWISE SPECIFIED IN THE PLANS.

THE PROCEDURE EXPLAINED ABOVE SHALL CONFORM TO THE APPLICABLE PORTIONS OF SECTIONS 353, 406, 602, AND 603 OF THE STANDARD SPECIFICATIONS EXCEPT THAT "THE CONTRACTOR SHALL ADJUST THE STRUCTURES TO THE FINISHED PAVEMENT ELEVATION NO MORE THAN 5 CALENDAR DAYS PRIOR TO PLACEMENT OF THE FINAL LIFT OF SURFACE UNLESS APPROVED BY THE ENGINEER."

LEGEND

1. SUB-BASE GRANULAR MATERIAL
2. EXISTING PAVEMENT
3. 36 (900) DIAMETER METAL PLATE
4. PROPOSED CRUSHED STONE AND HMA SURFACE MIX
5. EXISTING STRUCTURE
6. FRAME AND LID (SEE NOTES)
7. CLASS PP-2* CONCRETE
8. PROPOSED HMA SURFACE COURSE
9. PROPOSED HMA BINDER COURSE

LOCATION OF STRUCTURES

THE CONTRACTOR WILL BE REQUIRED TO KEEP A RECORD OF THE LOCATIONS OF THE BURIED STRUCTURES ACCORDING TO THE STATION AND DISTANCE LEFT OR RIGHT OF THE CENTERLINE OF PAVEMENT. UPON COMPLETION OF THE WORK, THE CONTRACTOR WILL DELIVER THE RECORD TO THE ENGINEER.

BASIS OF PAYMENT

1. REMOVING FRAMES AND LIDS ON DRAINAGE AND UTILITY STRUCTURES IN THE PAVEMENT PRIOR TO MILLING, AND ADJUSTING TO FINAL GRADE PRIOR TO PLACING THE SURFACE COURSE, WILL BE PAID FOR AT THE CONTRACT UNIT PRICE EACH FOR "FRAMES AND LIDS TO BE ADJUSTED (SPECIAL)."

2. THIS WORK WILL NOT BE PAID FOR WHEN DRAINAGE AND UTILITY STRUCTURES ARE SPECIFIED FOR PAYMENT AS STRUCTURE RECONSTRUCTION.

3. NEW FRAMES AND LIDS, WHEN SPECIFIED, WILL BE PAID FOR SEPARATELY.

4. WHEN STRUCTURES ARE TO BE ADJUSTED OR RECONSTRUCTED, THE LOWERING AND RAISING OF THE FRAMES AND LIDS WILL NOT BE PAID FOR SEPARATELY BUT WILL BE INCLUDED IN THE COST OF THE CORRESPONDING PAY ITEM.

ALL DIMENSIONS ARE IN INCHES (MILLIMETERS) UNLESS OTHERWISE SHOWN

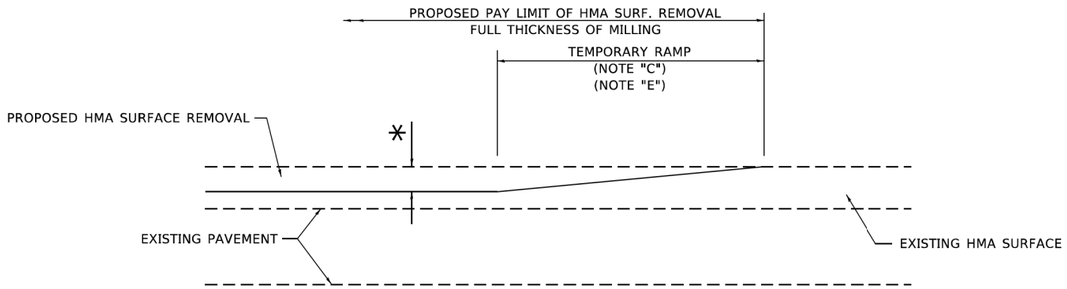

MILLED TEMPORARY RAMP

(FOR BUTT JOINT AND HMA TAPER SEE DETAIL BELOW)

OPTION 1

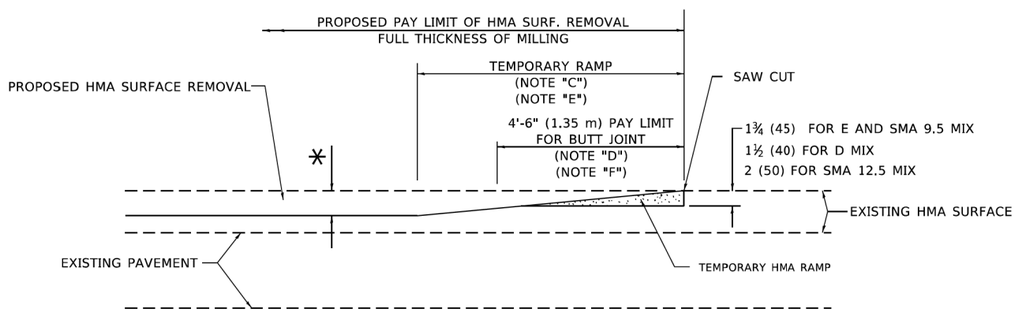

HMA CONSTRUCTED TEMPORARY RAMP

(FOR BUTT JOINT AND HMA TAPER SEE DETAIL BELOW)

OPTION 2

TYPICAL TEMPORARY RAMP

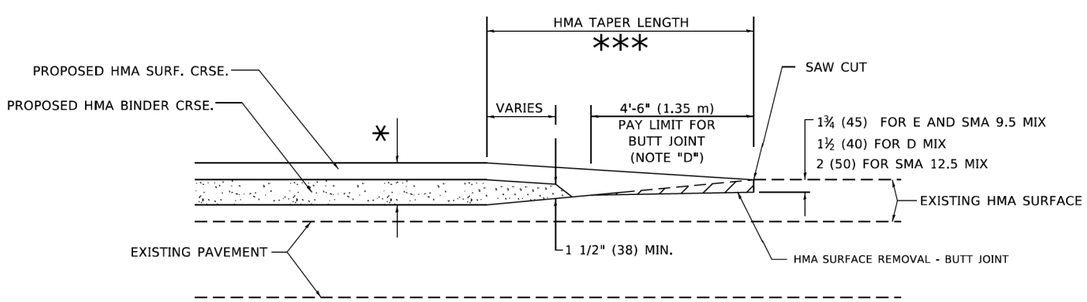

BUTT JOINT AND HMA TAPER

TYPICAL BUTT JOINT AND HMA TAPER FOR MILLING AND RESURFACING

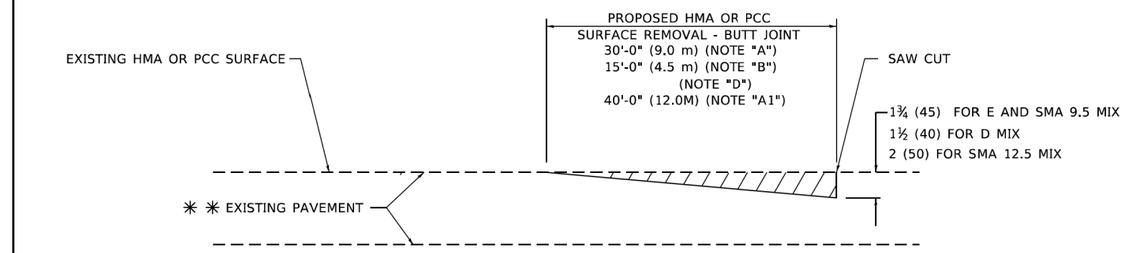

BUTT JOINT DETAIL

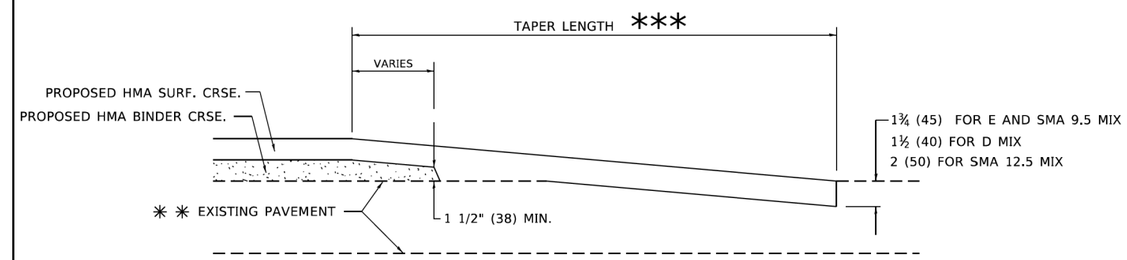

HMA TAPER DETAIL

TYPICAL BUTT JOINT AND HMA TAPER FOR RESURFACING ONLY

** PC CONCRETE, HMA OR HMA RESURFACED PAVEMENT.

GENERAL NOTES

A. MAINLINE ARTERIAL ROADWAYS AND MAJOR SIDE ROADS.

A1. INTERSTATES

B. MINOR SIDE ROADS.

C. THE TEMP. RAMP SHALL BE CONSTRUCTED IMMEDIATELY UPON REMOVAL OF THE EXISTING HMA SURFACE.

D. THE BUTT JOINT SHALL BE CONSTRUCTED IMMEDIATELY PRIOR TO PLACING THE PROPOSED HMA COURSES.

E. TAPER THE TEMP. RAMP AT A RATE OF 3' - 4" (1.02m) PER 1 INCH (25 mm) OF MILLING THICKNESS.

* SEE TYPICAL SECTIONS FOR MILLING THICKNESS.

F. SEE ARTICLE 406.08 AND 406.14 OF THE STANDARD SPECIFICATIONS FOR "HMA AND/OR PCC SURFACE REMOVAL, BUTT JOINT".

*** 20'-0" (6.1 m) PER 1 (25) RESURFACING (NOTE "A")
10'-0" (3.0 m) PER 1 (25) RESURFACING (NOTE "B")

BASIS OF PAYMENT

1. THE BUTT JOINT WILL BE PAID FOR AT THE CONTRACT UNIT PRICE PER SQUARE YARD (SQUARE METER) FOR "HOT-MIX ASPHALT SURFACE REMOVAL - BUTT JOINT" OR FOR "PORTLAND CEMENT CONCRETE SURFACE REMOVAL- BUTT JOINT".
2. THE TEMPORARY RAMP AND SAW CUT SHALL BE INCLUDED IN THE UNIT COST FOR HMA OR PCC SURFACE REMOVAL-BUTT JOINT.

ALL DIMENSIONS ARE IN INCHES (MILLIMETERS) UNLESS OTHERWISE SHOWN.

MODEL: Default
FILE NAME: pw:\\ildot-pw.bentley.com:PWIDOT\Documents\IDOT Offices\District 1\Projects\DistStd22x34\CADData\CADsheets\bd32.dgn

USER NAME = Lawrence,DeManche	DESIGNED - M. DE YONG	REVISED - A. ABBAS 03-21-97	STATE OF ILLINOIS DEPARTMENT OF TRANSPORTATION
	DRAWN -	REVISED - M. GOMEZ 04-06-01	
PLOT SCALE = 100.0000 ' / in.	CHECKED -	REVISED - R. BORO 01-01-07	
PLOT DATE = 11/18/2022	DATE - 06-13-90	REVISED - K. SMITH 11-18-22	

BUTT JOINT AND HMA TAPER DETAILS

SCALE: NONE | SHEET 1 OF 1 SHEETS | STA. TO STA.

F.A.U. RTE.	SECTION	COUNTY	TOTAL SHEETS	SHEET NO.
4006	22-00094-00-FP	KANE	105	79
	BD400-05 BD-32	CONTRACT NO. 61L58		
		ILLINOIS	FED. AID PROJECT	

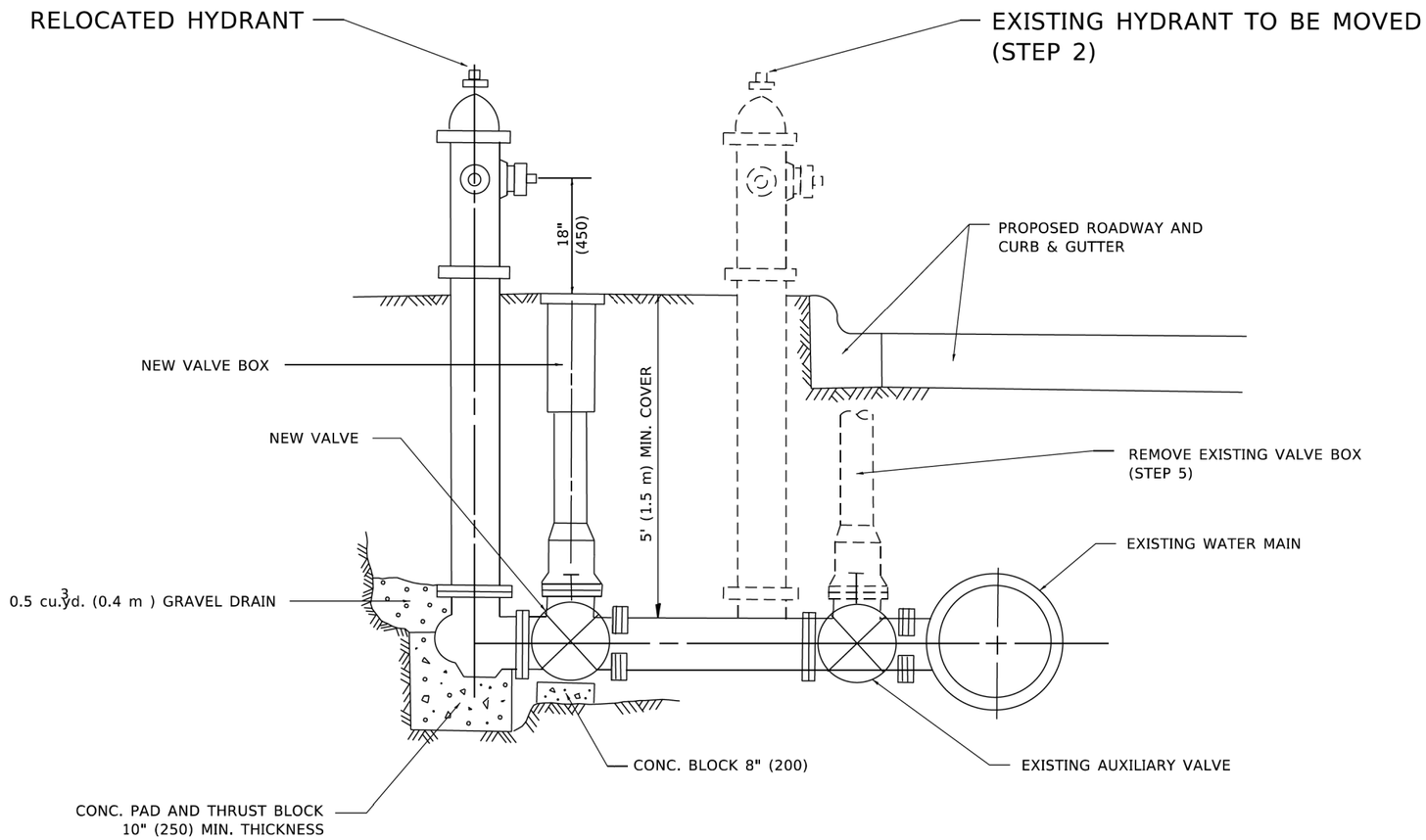

SEQUENCE OF CONSTRUCTION:

1. CLOSE EXISTING VALVE.
2. REMOVE EXISTING HYDRANT.
3. INSTALL HYDRANT EXTENSION AND NEW VALVE.
4. RELOCATE EXISTING HYDRANT.
5. OPEN EXISTING VALVE, REMOVE BOX.
6. BACKFILL.
7. FLUSH AND TEST FOR CHLORIDE RESIDUAL AND PROVIDE TEST.

NOTE:

ALL WORK TO BE DONE IN ACCORDANCE WITH SECTION 564 OF THE STANDARD SPECIFICATIONS. NEW VALVE AND BOX SHALL BE SAME MAKE AND MODEL AS EXISTING.

FIRE HYDRANT TO BE MOVED

ALL DIMENSIONS ARE IN INCHES (MILLIMETERS) UNLESS OTHERWISE SHOWN.

USER NAME = Lawrence.DeManche	DESIGNED -	REVISED - R. SHAH 09-09-94	STATE OF ILLINOIS DEPARTMENT OF TRANSPORTATION	FIRE HYDRANT TO BE MOVED	F.A.U. RTE.	SECTION	COUNTY	TOTAL SHEETS	SHEET NO.
	DRAWN -	REVISED - R. SHAH 10-25-94			4006	22-00094-00-FP	KANE	105	80
PLOT SCALE = 100.0000 ' / In.	CHECKED -	REVISED - K. SMITH 11-18-22				BD-36	CONTRACT NO. 61L58		
PLOT DATE = 11/18/2022	DATE -	REVISED -		SCALE: NONE SHEET 1 OF 1 SHEETS STA. TO STA.			ILLINOIS FED. AID PROJECT		

MODEL: Default
FILE NAME: pw:\\ildot-pw.bentley.com:PWIDOT\Documents\IDOT Offices\District 1\Projects\DistStd22x34\CADData\CADsheets\bd36.dgn

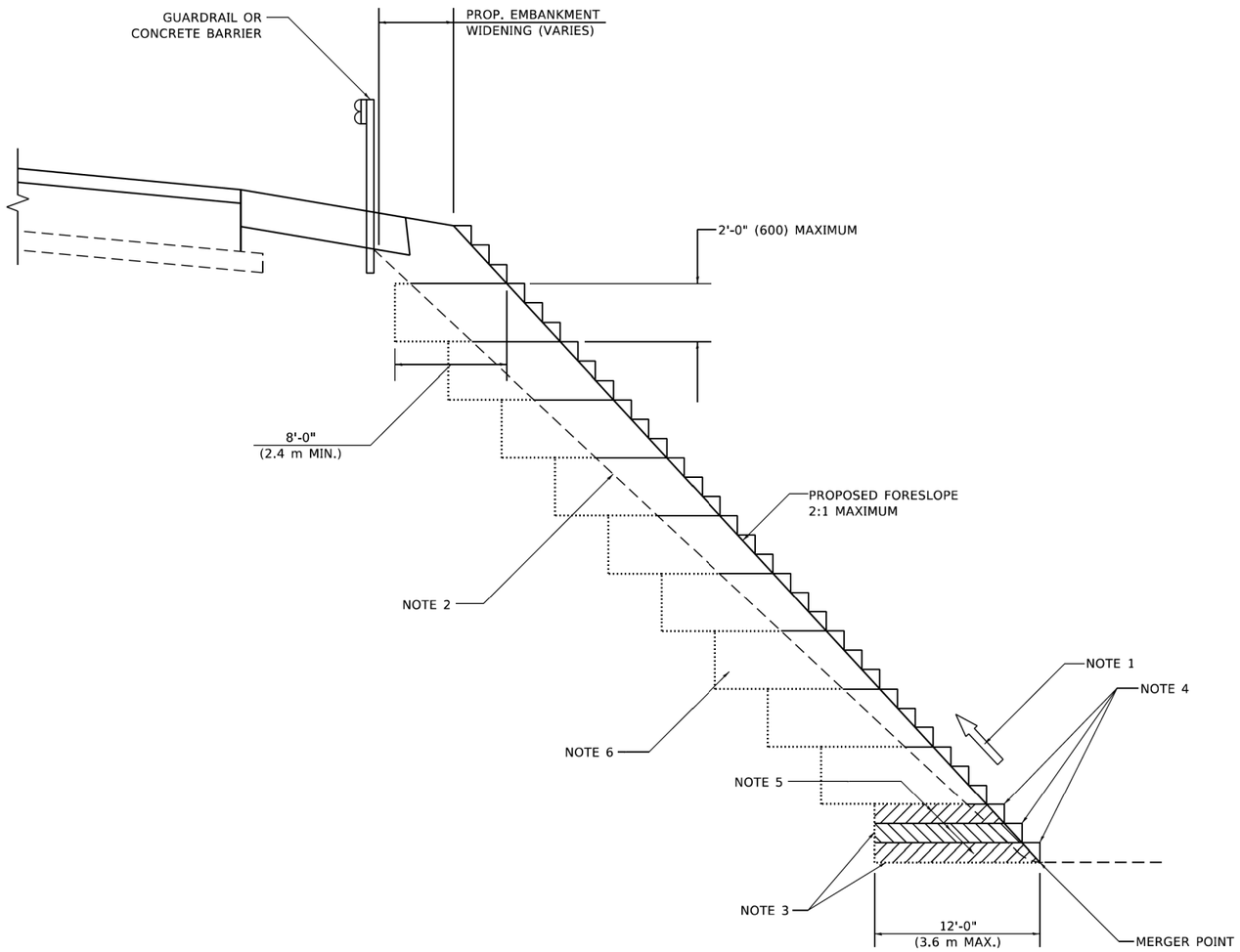

TYPICAL BENCHING DETAIL FOR EMBANKMENT

GENERAL NOTES

1. CONSTRUCT SUCCEEDING BENCH CUTS AND EMBANKMENT PLACEMENT AND COMPACTION FROM BOTTOM TO TOP IN STAIRSTEP FASHION.
2. EXISTING FORESLOPE PREPARED IN ACCORDANCE WITH ARTICLE 205.03 OF THE STANDARD SPECIFICATIONS.
3. BENCH CUT EXISTING SLOPE TYPICAL FOR EACH STEP.
4. TRIM TO FINAL SLOPE.
5. EQUAL 8-INCH (200) LIFTS OF EMBANKMENT COMPACTED IN ACCORDANCE WITH ARTICLE 205.05 OF THE STANDARD SPECIFICATIONS.

BASIS OF PAYMENT

1. EXCAVATION OF BENCH CUTS WITHIN EXISTING EMBANKMENT WILL BE PAID FOR AT THE CONTRACT UNIT PRICE PER CUBIC METER OR CUBIC YARD FOR "EARTH EXCAVATION". THIS PRICE WILL INCLUDE ALL LABOR AND MATERIAL, NO ADDITIONAL COMPENSATION WILL BE ALLOWED.

ALL DIMENSIONS ARE IN INCHES (MILLIMETERS)
UNLESS OTHERWISE SHOWN.

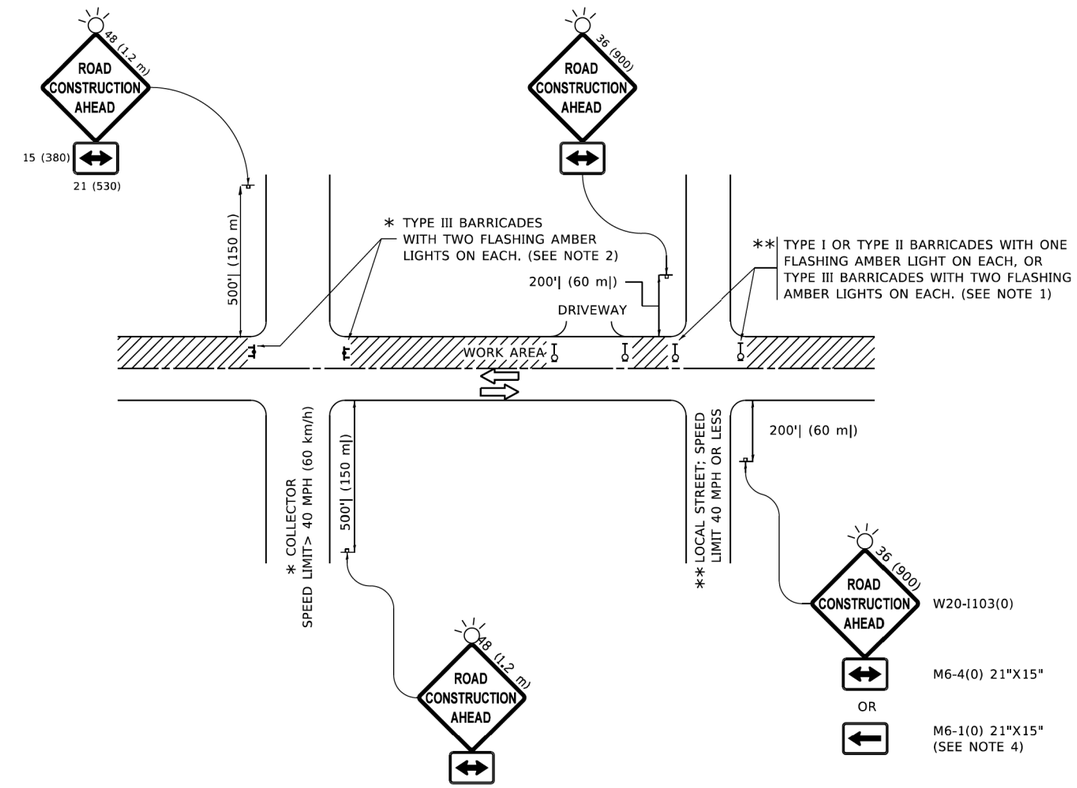

NOTES:

1. SIDE ROAD WITH A SPEED LIMIT OF 40 MPH (60 km/h) OR LESS AS SHOWN ON THE DRAWING AND AS DIRECTED BY THE ENGINEER:

   a) ONE "ROAD CONSTRUCTION AHEAD" SIGN 36 x 36 (900x900) WITH A FLASHER MOUNTED ON IT APPROXIMATELY 200' (60 m) IN ADVANCE OF THE MAIN ROUTE.

   b) THE CLOSED PORTION OF THE MAIN ROUTE SHALL BE PROTECTED BY BLOCKING WITH TYPE I, TYPE II OR TYPE III BARRICADES, 1/3 OF THE CROSS SECTION OF THE CLOSED PORTION.

2. SIDE ROAD WITH A SPEED LIMIT GREATER THAN 40 MPH (60 km/h) AS SHOWN ON THE DRAWING AND AS DIRECTED BY THE ENGINEER:

   a) ONE "ROAD CONSTRUCTION AHEAD" SIGN 48 x 48 (1.2 m x 1.2 m) WITH A FLASHER MOUNTED ON IT APPROXIMATELY 500' (150 m) IN ADVANCE OF THE MAIN ROUTE.

   b) THE CLOSED PORTION OF THE MAIN ROUTE SHALL BE PROTECTED BY BLOCKING WITH TYPE III BARRICADES, 1/2 OF THE CROSS SECTION OF THE CLOSED PORTION.

3. CONES MAY BE SUBSTITUTED FOR BARRICADES OR DRUMS AT HALF THE SPACING DURING DAY OPERATIONS. CONES SHALL BE A MINIMUM OF 28 (710) IN HEIGHT.

4. WHEN THE SIDE ROAD LIES BETWEEN THE BEGINNING OF THE MAINLINE SIGNING AND THE WORK ZONE, A SINGLE HEADED ARROW (M6-1) SHALL BE USED IN LIEU OF THE DOUBLE HEADED ARROW (M6-4).

5. WHEN WORK IS BEING PERFORMED ON A SIDE ROAD OR DRIVEWAY, FOLLOW THE APPLICABLE STANDARD(S). THE DIRECTIONAL ARROW (M6-1 OR M6-4) SHALL BE COVERED OR REMOVED WHEN NO LONGER CONSISTENT WITH THE TRAFFIC CONTROL SET-UP.

6. ADVANCE WARNING SIGNS ARE TO BE OMITTED ON DRIVEWAYS UNLESS OTHERWISE SPECIFIED IN THE PLANS OR BY THE ENGINEER.

7. THE TRAFFIC CONTROL AND PROTECTION FOR SIDE ROADS, INTERSECTIONS, AND DRIVEWAYS SHALL BE INCLUDED IN THE COST OF SPECIFIED TRAFFIC CONTROL STANDARDS OR ITEMS.

All dimensions are in inches (millimeters) unless otherwise shown.

MODEL: Default
FILE NAME: pw:\\ildot-pw.bentley.com:PWIDOT\Documents\IDOT Offices\District 1\Projects\DistStd22x34\CADData\CADsheets\tc10.dgn

HRGreen.com
Illinois Professional Design Firm # 184-001322

USER NAME = Lawrence.DeManche	DESIGNED - L.H.A.	REVISED - T. RAMMACHER 01-06-00	STATE OF ILLINOIS DEPARTMENT OF TRANSPORTATION
	DRAWN -	REVISED - A. SCHUETZE 07-01-13	
PLOT SCALE = 100.0000 ' / in.	CHECKED -	REVISED - A. SCHUETZE 09-15-16	
PLOT DATE = 5/3/2024	DATE - 06-89	REVISED - D. SENDERAK 05-03-24	

TRAFFIC CONTROL AND PROTECTION FOR SIDE ROADS, INTERSECTIONS, AND DRIVEWAYS

SCALE: NONE | SHEET 1 OF 1 SHEETS | STA. TO STA.

F.A.U. RTE.	SECTION	COUNTY	TOTAL SHEETS	SHEET NO.
4006	22-00094-00-FP	KANE	105	82
	TC-10	CONTRACT NO. 61L58		
		ILLINOIS FED. AID PROJECT		

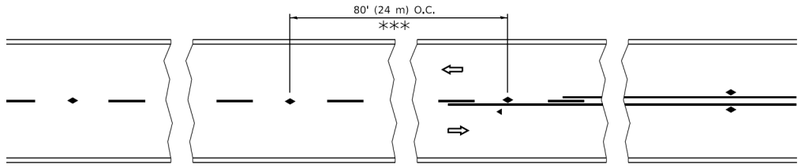

*** REDUCE TO 40' (12 m) O.C. ON CURVES WITH POSTED OR ADVISORY SPEED 45 M.P.H. (70 km/h) OR LESS.

TWO–LANE/TWO–WAY

SEE FIGURE 3B-14 MUTCD

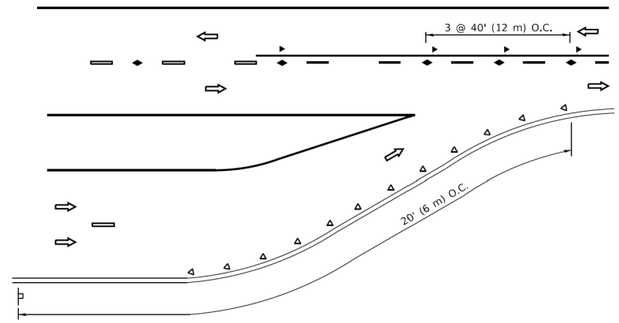

LANE REDUCTION TRANSITION

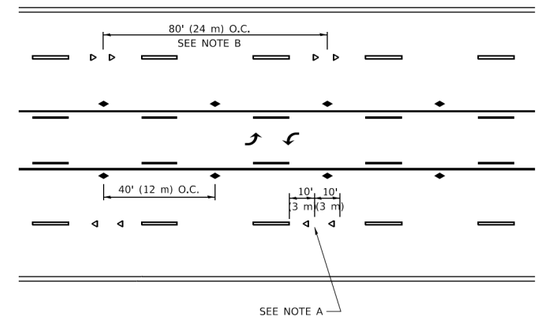

TWO–WAY LEFT TURN

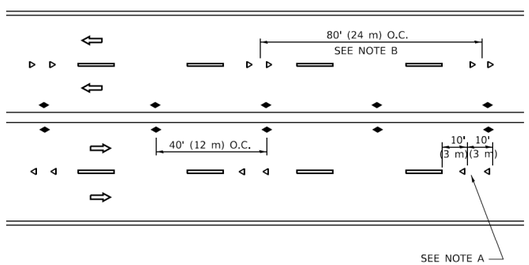

MULTI–LANE/UNDIVIDED

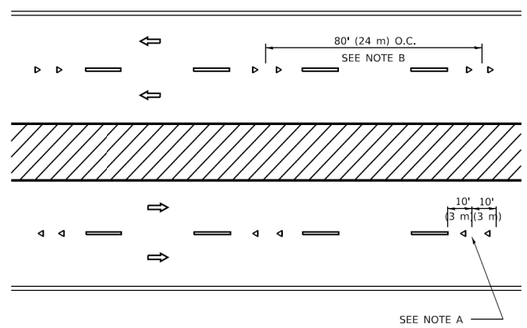

MULTI–LANE/DIVIDED

GENERAL NOTES

1. MARKERS USED WITH DASHED LINES SHALL BE CENTERED IN THE GAP BETWEEN SEGMENTS.
2. MARKERS USED ADJACENT TO SOLID LINES SHALL BE OFFSET 2 TO 3 (50 TO 75) TOWARD TRAFFIC AS SHOWN.
3. MARKERS THROUGH TANGENTS LESS THAN 500' (150 m) IN LENGTH BETWEEN CURVES SHALL BE INSTALLED AT THE LESSER OF THE TWO CURVE SPACINGS.
4. MARKERS ARE TO BE USED ADJACENT TO BOTH SOLID WHITE LINES IN DUAL LEFT TURN LANES

SYMBOLS

- YELLOW STRIPE
- WHITE STRIPE
- ONE-WAY AMBER MARKER
- ONE-WAY CRYSTAL MARKER (W/O)
- TWO-WAY AMBER MARKER

LANE MARKER NOTES

A. USE DOUBLE LANE LINE MARKERS SPACED AS SHOWN.

B. REDUCE TO 40' (12 m) O.C. ON CURVES WHERE ADVISORY SPEEDS ARE 10 M.P.H (20 km/h) LOWER THAN POSTED SPEEDS.

DESIGN NOTES

1. DOUBLE LANE LINE MARKERS SHALL BE USED UNLESS SPECIFIED OTHERWISE.
2. EXCEPT AS SHOWN ON THE LANE REDUCTION TRANSITION AND FREEWAY EXIT RAMP DETAIL, MARKERS ARE NOT TO BE SPECIFIED ON RIGHT EDGE LINES.
3. THE EXACT MARKER LIMITS, SPACING, AND COLOR SHALL BE INCLUDED IN THE PLANS WHEN STANDARD SPECIFICATIONS ARE NOT BEING USED.
4. MARKERS SHOULD NOT BE USED ALONGSIDE CURBS EXCEPT FOR EXTREMELY SHORT SECTIONS OF CURBS WHERE NOT MORE THAN TWO MARKERS WOULD BE INVOLVED.

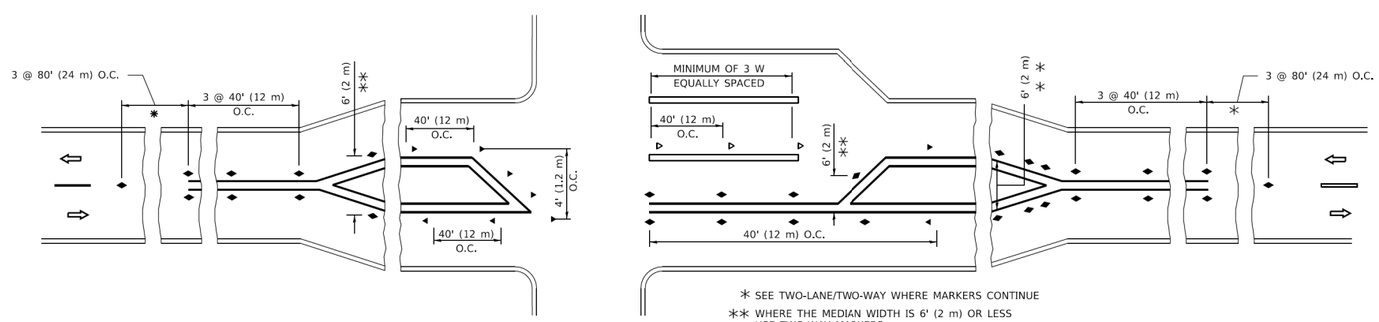

* SEE TWO-LANE/TWO-WAY WHERE MARKERS CONTINUE

** WHERE THE MEDIAN WIDTH IS 6' (2 m) OR LESS USE TWO-WAY MARKERS.

TURN LANES

All dimensions are in inches (millimeters) unless otherwise shown.

MODEL: Default
FILE NAME: pw:\\IL084EBIDINTEG.illinois.gov:PWIDOT\Documents\IDOT Offices\District 1\Projects\DistStd22x34\CADData\CADsheets\tc11.dgn

HRGreen.com
Illinois Professional Design Firm # 184-001322

USER NAME = footemj	DESIGNED -	REVISED - T. RAMMACHER 03-12-99	
	DRAWN -	REVISED - T. RAMMACHER 01-06-00	
PLOT SCALE = 50.0000 ' / in.	CHECKED -	REVISED - C. JUCIUS 09-09-09	
PLOT DATE = 3/4/2019	DATE -	REVISED - C. JUCIUS 07-01-13	

STATE OF ILLINOIS
DEPARTMENT OF TRANSPORTATION

TYPICAL APPLICATIONS
RAISED REFLECTIVE PAVEMENT MARKERS (SNOW–PLOW RESISTANT)

SCALE: NONE | SHEET 1 OF 1 SHEETS | STA. TO STA.

F.A.U. RTE.	SECTION	COUNTY	TOTAL SHEETS	SHEET NO.
4006	22-00094-00-FP	KANE	105	83
	TC-11	CONTRACT NO. 61L58		
		ILLINOIS	FED. AID PROJECT	

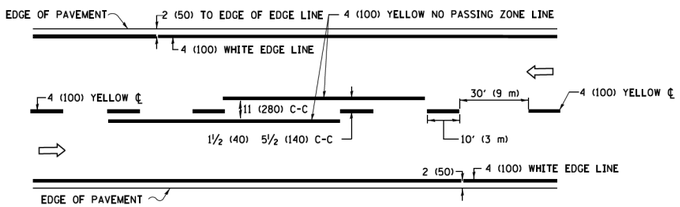

2–LANE ROADWAY

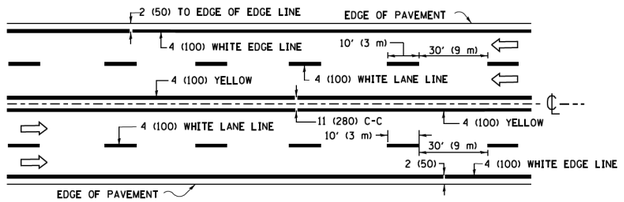

MULTI–LANE UNDIVIDED

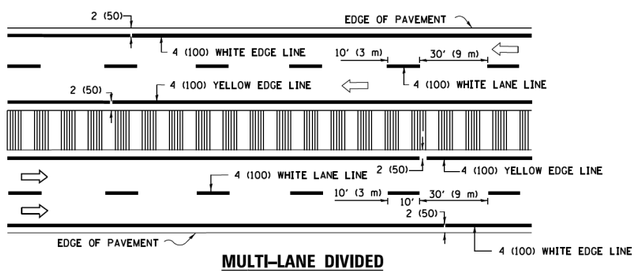

MULTI–LANE DIVIDED

WITH MEDIAN

TYPICAL LANE AND EDGE LINE MARKING

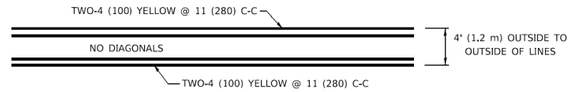

4' (1.2 m) WIDE MEDIANS ONLY

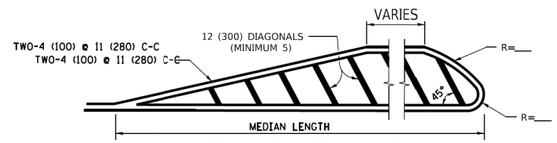

FOR MEDIAN LENGTHS WHERE DIAGONAL SPACING CANNOT BE ATTAINED, USE 5 (FIVE) EQUALLY SPACED DIAGONAL LINES.

DIAGONAL LINE SPACING: 50' (15 m) C-C (LESS THAN 30MPH (50 km/h))
75' (25 m) C-C 30MPH (50 km/h) TO 45MPH (70 km/h))
150' (45 m) C-C (MORE THAN 45MPH (70 km/h))

MEDIANS OVER 4' (1.2 m) WIDE

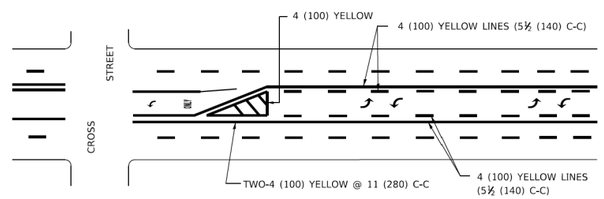

A MINIMUM OF TWO PAIRS OF TURN ARROWS SHALL BE USED, WHITE IN COLOR. ADDITIONAL PAIRS SHALL BE PLACED AT 200' (60 m) TO 300' (90 m) INTERVALS.

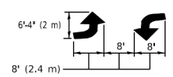

MEDIAN WITH TWO–WAY LEFT TURN LANE

TYPICAL PAINTED MEDIAN MARKING

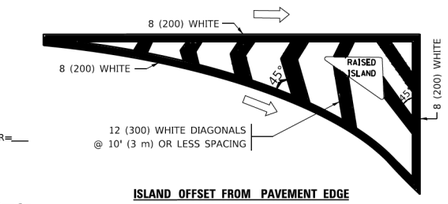

ISLAND OFFSET FROM PAVEMENT EDGE

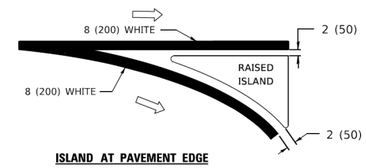

ISLAND AT PAVEMENT EDGE

TYPICAL ISLAND MARKING

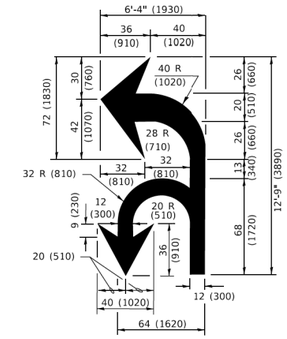

COMBINATION LEFT AND U–TURN

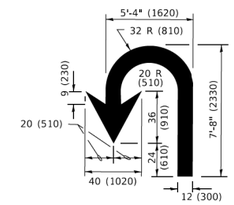

U–TURN

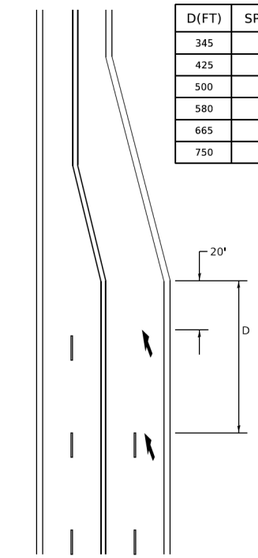

D(FT)	SPEED LIMIT
345	30
425	35
500	40
580	45
665	50
750	55

LANE REDUCTION TRANSITION

* LANE REDUCTION ARROWS REQUIRED AT SPEEDS OF 45 MPH OR GREATER OR WHEN SPECIFIED IN PLANS.

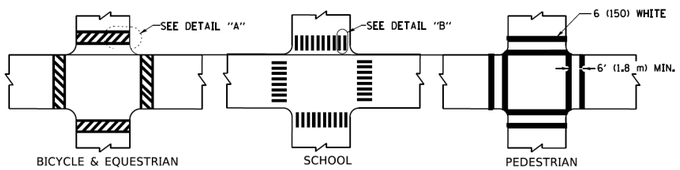

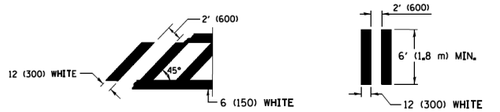

DETAIL "A" DETAIL "B"

TYPICAL CROSSWALK MARKING

* MARKINGS SHALL BE INSTALLED PARALLEL TO THE CENTERLINE OF THE ROAD WHICH IT CROSSES

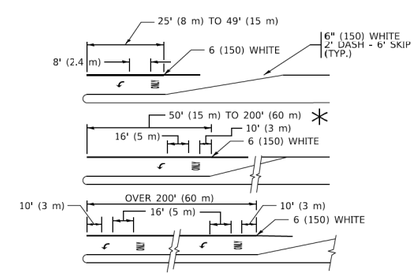

FULL SIZE LETTERS 8' (2.4 m) AND ARROWS SHALL BE USED.
AREA = 15.6 SQ. FT. (1.5 m²) ONLY AREA = 20.8 SQ. FT. (1.9 m²)

* TURN LANES IN EXCESS OF 400' (120 m) IN LENGTH MAY HAVE AN ADDITIONAL SET OF ARROW - "ONLY" INSTALLED MIDWAY BETWEEN THE OTHER TWO SETS OF ARROW - "ONLY".

TYPICAL LEFT (OR RIGHT) TURN LANE

TYPICAL TURN LANE MARKING

TYPE OF MARKING	WIDTH OF LINE	PATTERN	COLOR	SPACING / REMARKS
CENTERLINE ON 2 LANE PAVEMENT	4 (100)	SKIP-DASH	YELLOW	10' (3 m) LINE WITH 30' (9 m) SPACE
CENTERLINE ON MULTI-LANE UNDIVIDED PAVEMENT	2 @ 4 (100)	SOLID	YELLOW	11 (280) C-C
NO PASSING ZONE LINES: FOR ONE DIRECTION FOR BOTH DIRECTIONS	4 (100) 2 @ 4 (100)	SOLID SOLID	YELLOW YELLOW	5½ (140) C-C FROM SKIP-DASH CENTERLINE 11 (280) C-C OMIT SKIP-DASH CENTERLINE BETWEEN
LANE LINES	4 (100) 5 (125) ON FREEWAYS	SKIP-DASH SKIP-DASH	WHITE WHITE	10' (3 m) LINE WITH 30' (9 m) SPACE
DOTTED LINES (EXTENSIONS OF CENTER, LANE OR TURN LANE MARKINGS)	SAME AS LINE BEING EXTENDED	SKIP-DASH	SAME AS LINE BEING EXTENDED	2' (600) LINE WITH 6' (1.8 m) SPACE
EDGE LINES	4 (100)	SOLID	YELLOW-LEFT WHITE-RIGHT	OUTLINE MEDIANS IN YELLOW
TURN LANE MARKINGS	6 (150) LINE; FULL SIZE LETTERS & SYMBOLS (8' (2.4m))	SOLID	WHITE	SEE TYPICAL TURN LANE MARKING DETAIL
TWO WAY LEFT TURN MARKING	2 @ 4 (100) EACH DIRECTION 8' (2.4m) LEFT ARROW	SKIP-DASH AND SOLID IN PAIRS	YELLOW WHITE	10' (3 m) LINE WITH 30' (9 m) SPACE FOR SKIP-DASH; 5½ (140) C-C BETWEEN SOLID LINE AND SKIP-DASH LINE SEE TYPICAL TWO-WAY LEFT TURN MARKING DETAIL
CROSSWALK LINES (PEDESTRIAN) A. DIAGONALS (BIKE & EQUESTRIAN) B. LONGITUDINAL BARS (SCHOOL)	2 @ 6 (150) 12 (300) @ 45° 12 (300) @ 90°	SOLID SOLID SOLID	WHITE WHITE WHITE	NOT LESS THAN 6' (1.8 m) APART 2' (600) APART 2' (600) APART SEE TYPICAL CROSSWALK MARKING DETAILS.
STOP LINES	24 (600)	SOLID	WHITE	PLACE 4' (1.2 m) IN ADVANCE OF AND PARALLEL TO CROSSWALK, IF PRESENT. OTHERWISE, PLACE AT DESIRED STOPPING POINT. PARALLEL TO CROSSROAD CENTERLINE, WHERE POSSIBLE
PAINTED MEDIANS	2 @ 4 (100) WITH 12 (300) DIAGONALS @ 45° NO DIAGONALS USED FOR 4' (1.2 m) WIDE MEDIANS	SOLID	YELLOW: TWO WAY TRAFFIC WHITE: ONE WAY TRAFFIC	11 (280) C-C FOR THE DOUBLE LINE SEE TYPICAL PAINTED MEDIAN MARKING.
GORE MARKING AND CHANNELIZING LINES	8 (200) WITH 12 (300) DIAGONALS @ 45°	SOLID	WHITE	DIAGONALS: 15' (4.5 m) C-C (LESS THAN 30MPH (50 km/h)) 20' (6 m) C-C 30MPH (50 km/h) TO 45MPH (70 km/h)) 30' (9 m) C-C (OVER 45MPH (70 km/h))
RAILROAD CROSSING	24 (600) TRANSVERSE LINES; "RR" IS 6' (1.8 m) LETTERS; 16 (400) LINE FOR "X"	SOLID	WHITE	SEE STATE STANDARD 780001 AREA OF: "R"=3.6 SQ. FT. (0.33 m²) EACH "X"=54.0 SQ. FT. (5.0 m²)
SHOULDER DIAGONALS (REQUIRED FOR SHOULDERS ≥ 8')	12 (300) @ 45°	SOLID	WHITE - RIGHT YELLOW - LEFT	50' (15 m) C-C (LESS THAN 30MPH (50 km/h)) 75' (25 m) C-C (30 MPH (50 km/h) TO 45MPH (70 km/h)) 150' (45 m) C-C (OVER 45MPH (70 km/h))
U TURN ARROW	SEE DETAIL	SOLID	WHITE	16.3 SF
2 ARROW COMBINATION LEFT AND U TURN	SEE DETAIL	SOLID	WHITE	30.4 SF

FOR FURTHER DETAILS ON PAVEMENT MARKING REFER TO STANDARD SPECIFICATIONS FOR ROAD AND BRIDGE CONSTRUCTION AND STATE STANDARD 780001.

All dimensions are in inches (millimeters) unless otherwise shown.

MODEL: Default
FILE NAME: pw:\\IL084EBIDINTEG.illinois.gov:PWIDOT\Documents\IDOT Offices\District 1\Projects\DistStd22x34\CADData\CADsheets\tc13.dgn

HRGreen.com
Illinois Professional Design Firm # 184-001322

USER NAME = footemj	DESIGNED - EVERS	REVISED - C. JUCIUS 09-09-09	
	DRAWN -	REVISED - C. JUCIUS 07-01-13	
PLOT SCALE = 50.0000 ' / in.	CHECKED -	REVISED - C. JUCIUS 12-21-15	
PLOT DATE = 3/4/2019	DATE - 03-19-90	REVISED - C. JUCIUS 04-12-16	

STATE OF ILLINOIS
DEPARTMENT OF TRANSPORTATION

DISTRICT ONE
TYPICAL PAVEMENT MARKINGS

SCALE: NONE | SHEET 1 OF 2 SHEETS | STA. TO STA.

F.A.U. RTE.	SECTION	COUNTY	TOTAL SHEETS	SHEET NO.
4006	22-00094-00-FP	KANE	105	84
	TC–13	CONTRACT NO. 61L58		
		ILLINOIS	FED. AID PROJECT	

TURN BAY ENTRANCE AT START OF LANE CLOSURE TAPER

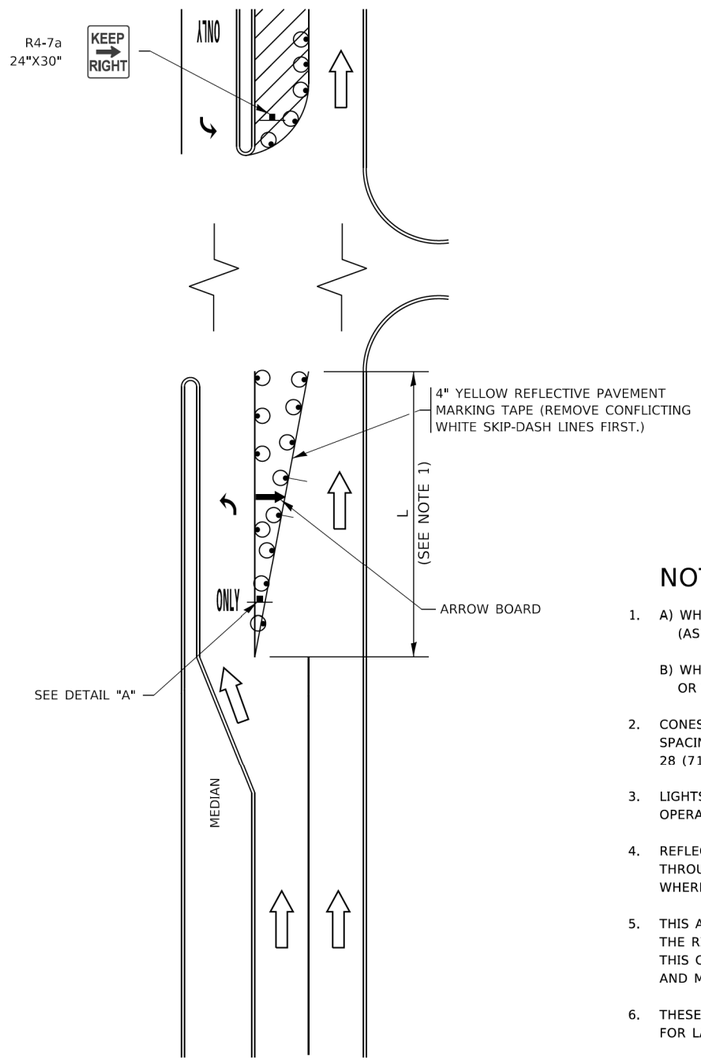

FIGURE 1

LEGEND

- WORK AREA
- LANE OPEN TO TRAFFIC
- ARROW BOARD
- TYPE I OR II BARRICADE OR DRUM WITH STEADY BURN LIGHT
- DRUM WITH STEADY BURN LIGHT
- SIGN ASSEMBLY
- TYPE I OR II CHECK BARRICADE WITH FLASHING LIGHT

NOTES:

1. A) WHEN "L" IS ≤ THE STORAGE LENGTH OF THE TURN LANE (AS SHOWN IN FIG. 1), USE FIGURE 1.

   B) WHEN "L" IS > THE STORAGE LENGTH OF THE TURN LANE OR THE TURN LANE IS WITHIN THE LANE CLOSURE, USE FIGURE 2.

2. CONES MAY BE SUBSTITUTED FOR BARRICADES OR DRUMS AT HALF THE SPACING DURING DAY OPERATIONS. CONES SHALL BE A MINIMUM OF 28 (710) IN HEIGHT.

3. LIGHTS WILL NOT BE REQUIRED ON BARRICADES OR DRUMS FOR DAY OPERATIONS. ALL LIGHTS SHALL BE MONODIRECTIONAL.

4. REFLECTIVE TEMPORARY PAVEMENT MARKINGS SHALL BE PLACED THROUGHOUT THE BARRICADED AREAS OF EACH TURN BAY AS SHOWN WHERE THE CLOSURE TIME IS GREATER THAN FOURTEEN (14) DAYS.

5. THIS APPLICATION ALSO APPLIES WHEN WORK IS BEING PERFORMED IN THE RIGHT LANE(S) AND THE RIGHT TURN BAY IS TO REMAIN OPEN. UNDER THIS CONDITION, "RIGHT TURN LANE" R3-I100R 24 x 24 (600 x 600) AND M6-2R 21 x 15 (530 x 380) SHALL BE USED.

6. THESE CONTROLS SHALL SUPPLEMENT MAINLINE TRAFFIC CONTROL FOR LANE CLOSURES.

7. THE SIGNS SHALL BE MOUNTED ABOVE THE BARRICADES/DRUMS ON SEPARATE SIGN SUPPORTS THAT MEET NCHRP 350 OR MASH PREQUIREMENTS.

8. TRAFFIC CONTROL AND PROTECTION AT TURN BAYS (TO REMAIN OPEN TO TRAFFIC) SHALL BE INCLUDED IN THE COST OF SPECIFIED TRAFFIC CONTROL STANDARDS OR ITEMS.

TURN BAY ENTRANCE WITHIN A LANE CLOSURE

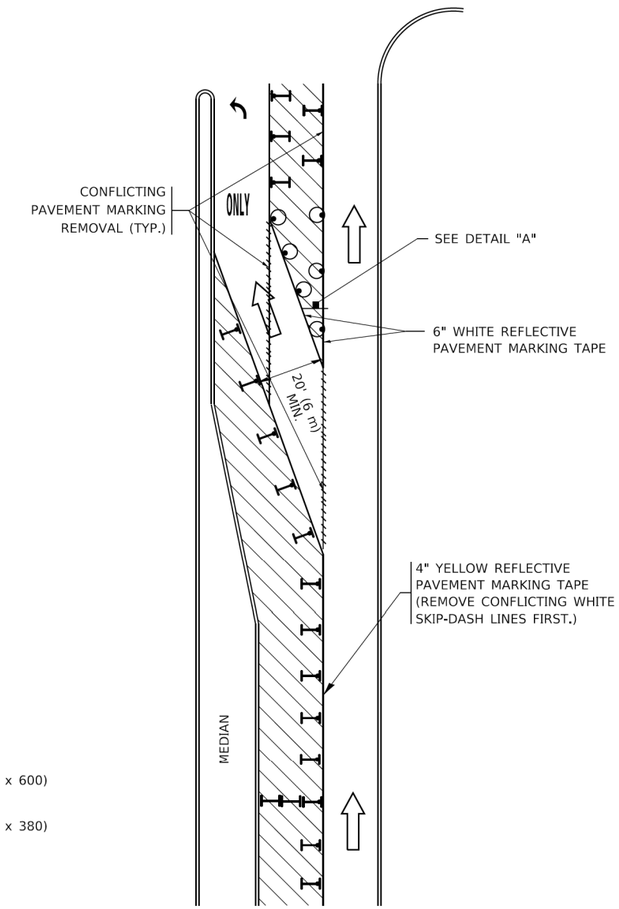

FIGURE 2

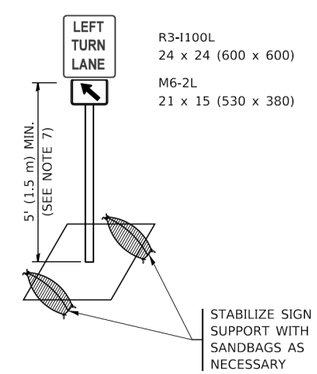

DETAIL A

All dimensions are in inches (millimeters) unless otherwise shown.

MODEL: Default
FILE NAME: pw:\\IL084EBIONTEG.illinois.gov:PWIDOT\Documents\IDOT Offices\District 1\Projects\Std\Std22x34\CADData\CADsheets\tc14.dgn

HRGreen.com
Illinois Professional Design Firm # 184-001322

USER NAME = footemj	DESIGNED - T. RAMMACHER 09-08-94	REVISED - R. BORO 09-14-09	STATE OF ILLINOIS DEPARTMENT OF TRANSPORTATION	TRAFFIC CONTROL AND PROTECTION AT TURN BAYS (TO REMAIN OPEN TO TRAFFIC)
	DRAWN - A. HOUSEH 11-07-95	REVISED - A. SCHUETZE 07-01-13		
PLOT SCALE = 50.0000 ' / in.	CHECKED - A. HOUSEH 10-12-96	REVISED - A. SCHUETZE 09-15-16		
PLOT DATE = 3/4/2019	DATE - T. RAMMACHER 01-06-00	REVISED -		SCALE: NONE SHEET 1 OF 1 SHEETS STA. TO STA.

F.A.U. RTE.	SECTION	COUNTY	TOTAL SHEETS	SHEET NO.
4006	22-00094-00-FP	KANE	105	85
	TC-14	CONTRACT NO. 61L58		
		ILLINOIS	FED. AID PROJECT	

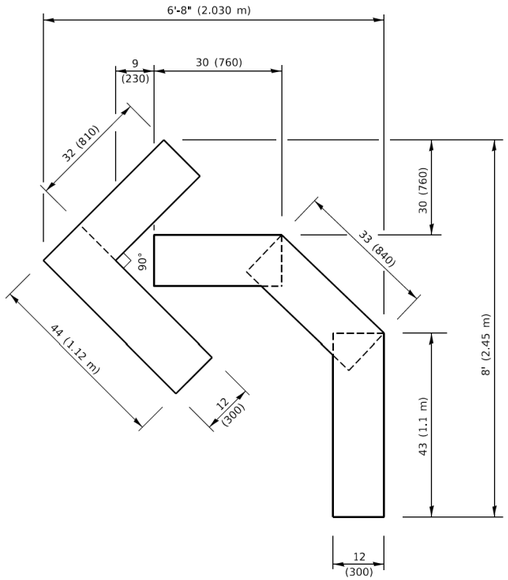

QUANTITY

4 (100) LINE = 45.5 ft. (13.9 m)
15.2 sq. ft. (1.41 sq. m)

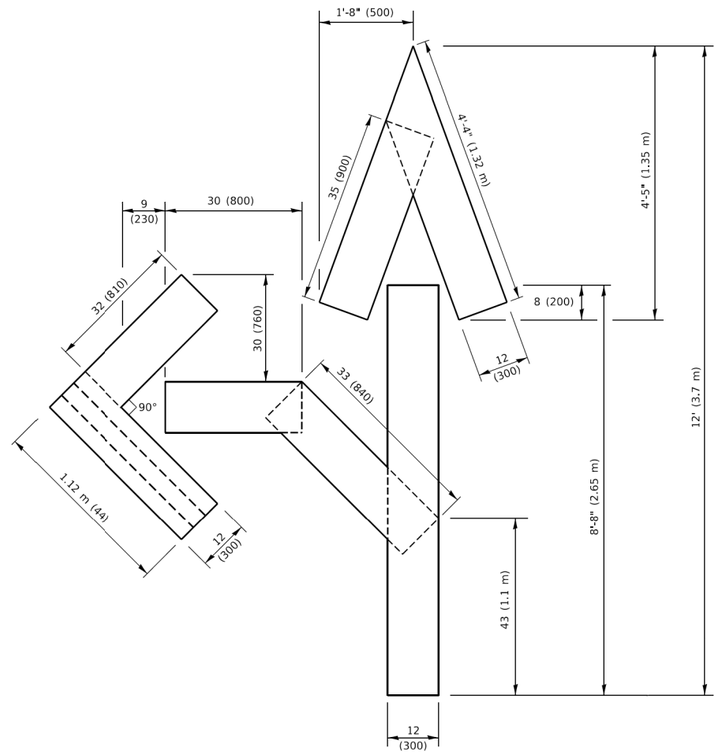

QUANTITY

4 (100) LINE = 82.5 ft. (25.1 m)
27.5 sq. ft. (2.53 sq. m)

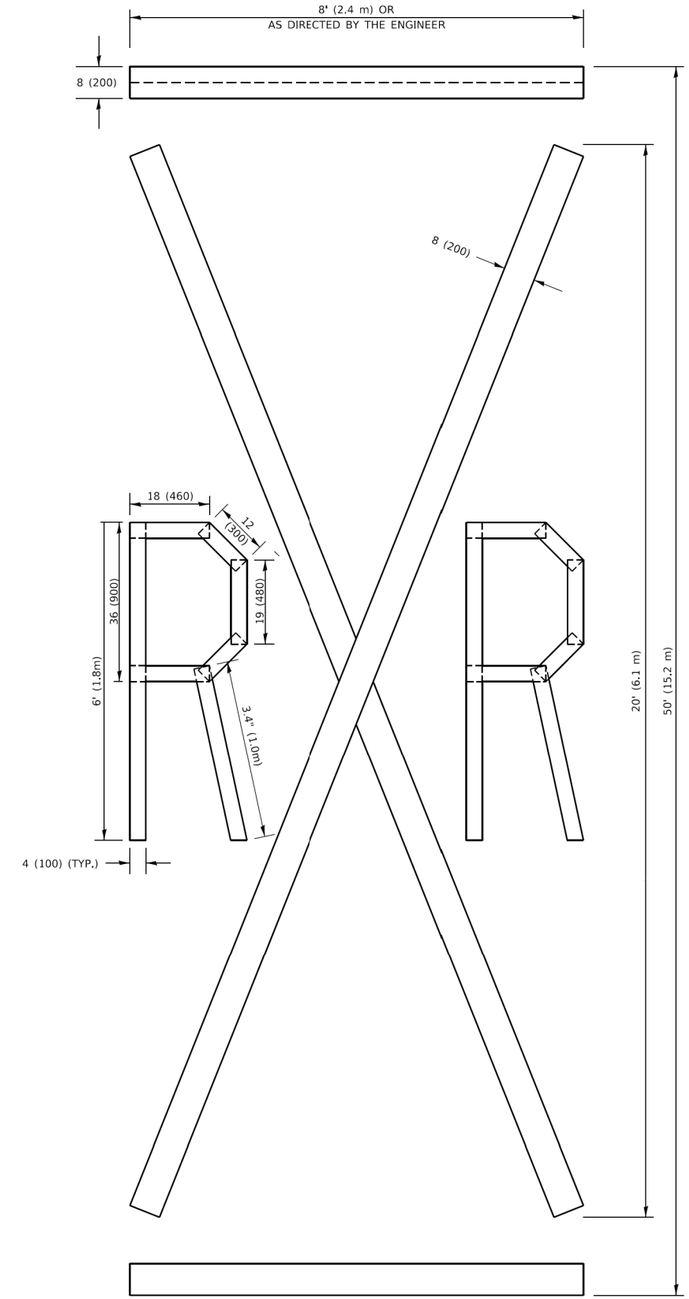

QUANTITY

4 (100) LINE = 225.9 ft. (68.9 m)
75.3 sq. ft. (6.99 sq. m)

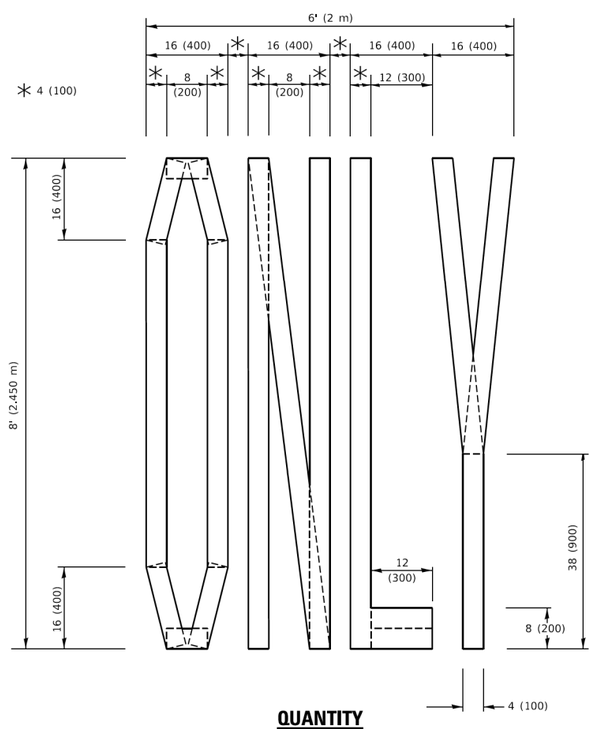

QUANTITY

4 (100) LINE = 64.1 ft. (19.5 m)
21.4 sq. ft. (1.99 sq. m)

NOTE:

ALL QUANTITIES OF PLACEMENT ARE REPRESENTED IN LINEAR FEET OF 4" LINES TO MATCH THE 4" TEMPORARY TAPE PAY ITEM AND REPRESENTS THE TOTAL QUANTITY OF 4" TAPE REQUIRED.

All dimensions are in inches (millimeters) unless otherwise shown.

MODEL: Default
FILE NAME: pw:\\IL084EBIDINTEG.illinois.gov:PWIDOT\Documents\IDOT Offices\District 1\Projects\District\22x34\CADData\CADsheets\tc16.dgn

HRGreen.com
Illinois Professional Design Firm # 184-001322

USER NAME = footemj	DESIGNED -	REVISED - T. RAMMACHER 03-02-98	
	DRAWN -	REVISED - E. GOMEZ 08-28-00	
PLOT SCALE = 50.0068 ' / in.	CHECKED -	REVISED - E. GOMEZ 08-28-00	
PLOT DATE = 3/4/2019	DATE - 09-18-94	REVISED - A. SCHUETZE 09-15-16	

STATE OF ILLINOIS
DEPARTMENT OF TRANSPORTATION

SHORT TERM PAVEMENT MARKING LETTERS AND SYMBOLS

SCALE: NONE | SHEET 1 OF 1 SHEETS | STA. TO STA.

F.A.U. RTE.	SECTION	COUNTY	TOTAL SHEETS	SHEET NO.
4006	22-00094-00-FP	KANE	105	86
	TC-16	CONTRACT NO. 61L58		
	ILLINOIS	FED. AID PROJECT		

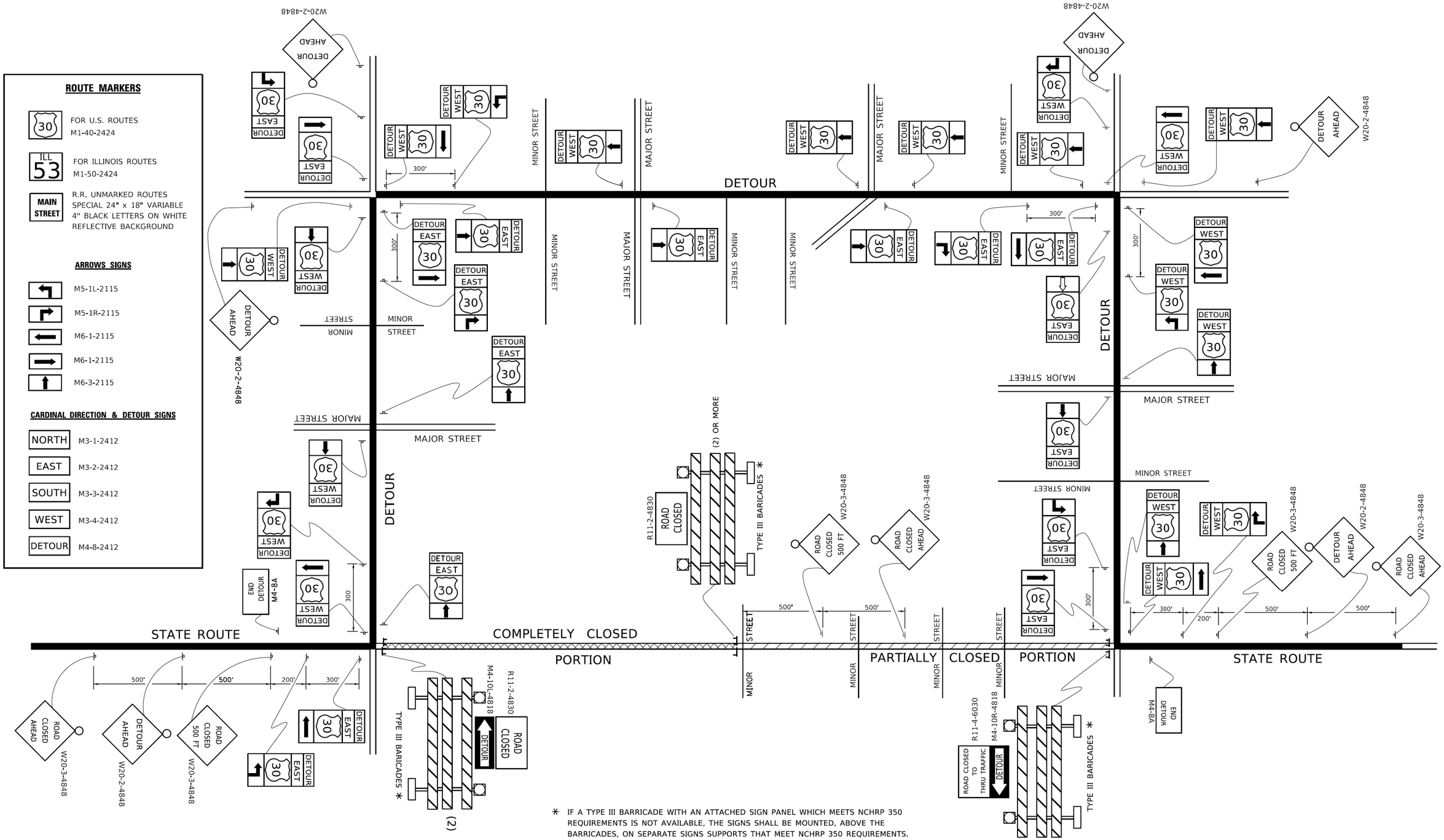

MODEL: Default
FILE NAME: pw:\\IL084EBIDINTEG.illinois.gov:PWIDOT\Documents\IDOT Offices\District 1\Projects\DistStd22x34\CADdata\CADsheets\tc21.dgn

USER NAME = footemj	DESIGNED -	REVISED - 10-18-02	STATE OF ILLINOIS DEPARTMENT OF TRANSPORTATION	DETOUR SIGNING FOR CLOSING STATE HIGHWAYS	F.A.U. RTE. 4006 / SECTION 22-00094-00-FP / COUNTY KANE / TOTAL SHEETS 105 / SHEET NO. 87
	DRAWN -	REVISED - R. BORO 09-14-09			TC-21 / CONTRACT NO. 61L58
PLOT SCALE = 50.0000 ' / in.	CHECKED -	REVISED -			ILLINOIS FED. AID PROJECT
PLOT DATE = 3/4/2019	DATE -	REVISED -		SCALE: NONE / SHEET 1 OF 1 SHEETS / STA. / TO STA.	

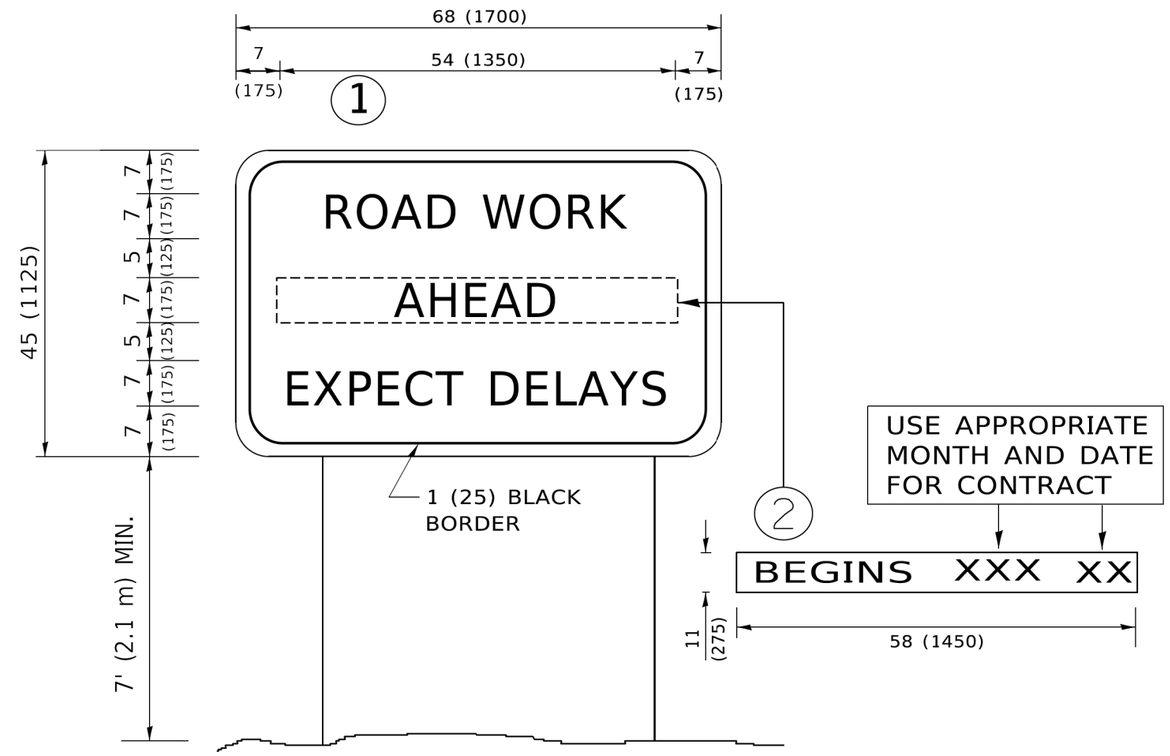

NOTES:

1. USE BLACK LETTERING ON ORANGE BACKGROUND.
2. ERECT SIGNS IN ADVANCE OF THE LOCATION FOR THE "ROAD CONSTRUCTION AHEAD" SIGN AT LOCATIONS AS DIRECTED BY THE ENGINEER.
3. ERECT SIGN (1) WITH INSTALLED PANEL (2) ONE WEEK PRIOR TO THE START OF CONSTRUCTION.
4. REMOVE PANEL (2) SOON AFTER THE START OF CONSTRUCTION.
5. SEE SPECIAL PROVISION FOR "TEMPORARY INFORMATION SIGNING" FOR ADDITIONAL INFORMATION.
6. ONE SIGN ASSEMBLY EQUALS 25.70 SQ. FT. (2.3 SQ. M.)
7. SHALL BE PAID FOR AS TEMPORARY INFORMATION SIGNING.

ALL DIMENSIONS ARE IN INCHES (MILLIMETERS) UNLESS OTHERWISE SHOWN.

MODEL: Default
FILE NAME: pw:\\IL084EBIDINTEG.illinois.gov:PWIDOT\Documents\IDOT Offices\District 1\Projects\Dist5\d22x34\CADData\CADsheets\tc22.dgn

HRGreen.com
Illinois Professional Design Firm # 184-001322

USER NAME = footemj	DESIGNED -	REVISED -	R. MIRS 09-15-97	STATE OF ILLINOIS DEPARTMENT OF TRANSPORTATION
	DRAWN -	REVISED -	R. MIRS 12-11-97	
PLOT SCALE = 50.0000 ' / in.	CHECKED -	REVISED -	T. RAMMACHER 02-02-99	
PLOT DATE = 3/4/2019	DATE -	REVISED -	C. JUCIUS 01-31-07	

ARTERIAL ROAD INFORMATION SIGN

SCALE: NONE | SHEET 1 OF 1 SHEETS | STA. | TO STA.

F.A.U. RTE.	SECTION	COUNTY	TOTAL SHEETS	SHEET NO.
4006	22-00094-00-FP	KANE	105	88
	TC-22	CONTRACT NO. 61L58		
		ILLINOIS	FED. AID PROJECT	

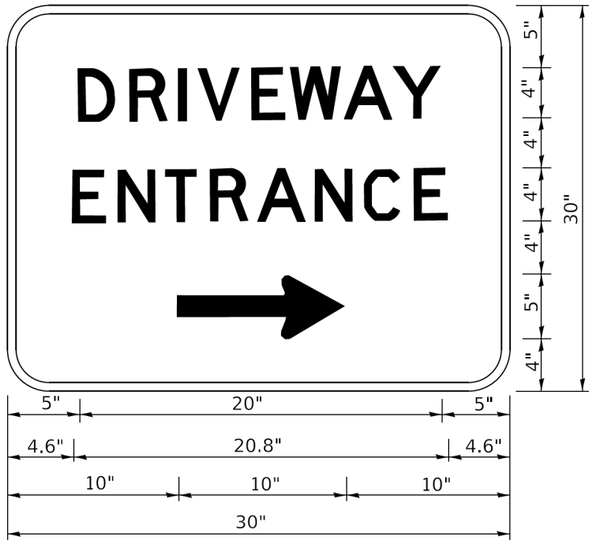

3.0" RADIUS, 0.5" BORDER, WHITE ON GREEN; REFLECTORIZED
"DRIVEWAY" D; "ENTRANCE" D; STANDARD ARROW CUSTOM 12.0" x 5.0"

NOTES:

1. HALF OF THE SIGNS WILL REQUIRE A LEFT HAND FACING ARROW.
2. TWO SIGNS SHALL BE USED AT EACH COMMERCIAL ENTRANCE PLACED BACK-TO-BACK: ONE WITH A RIGHT HAND ARROW (SHOWN) SHALL BE PLACED ON THE NEAR RIGHT SIDE THE DRIVEWAY AND ONE WITH A LEFT HAND ARROW SHALL BE PLACED ON THE FAR LEFT SIDE OF THE DRIVEWAY.
3. SIGNS TO BE PAID FOR AS ITEM "TEMPORARY INFORMATION SIGNING".

FINAL SURVEY		BY	DATE
NOTE BOOK	SURVEYED		
	PLOTTED		
	TEMPLATE		
	AREAS		
NO.	AREAS CHECKED		

ORIGINAL SURVEY		BY	DATE
NOTE BOOK	SURVEYED		
	PLOTTED		
	TEMPLATE		
	AREAS		
NO.	AREAS CHECKED		

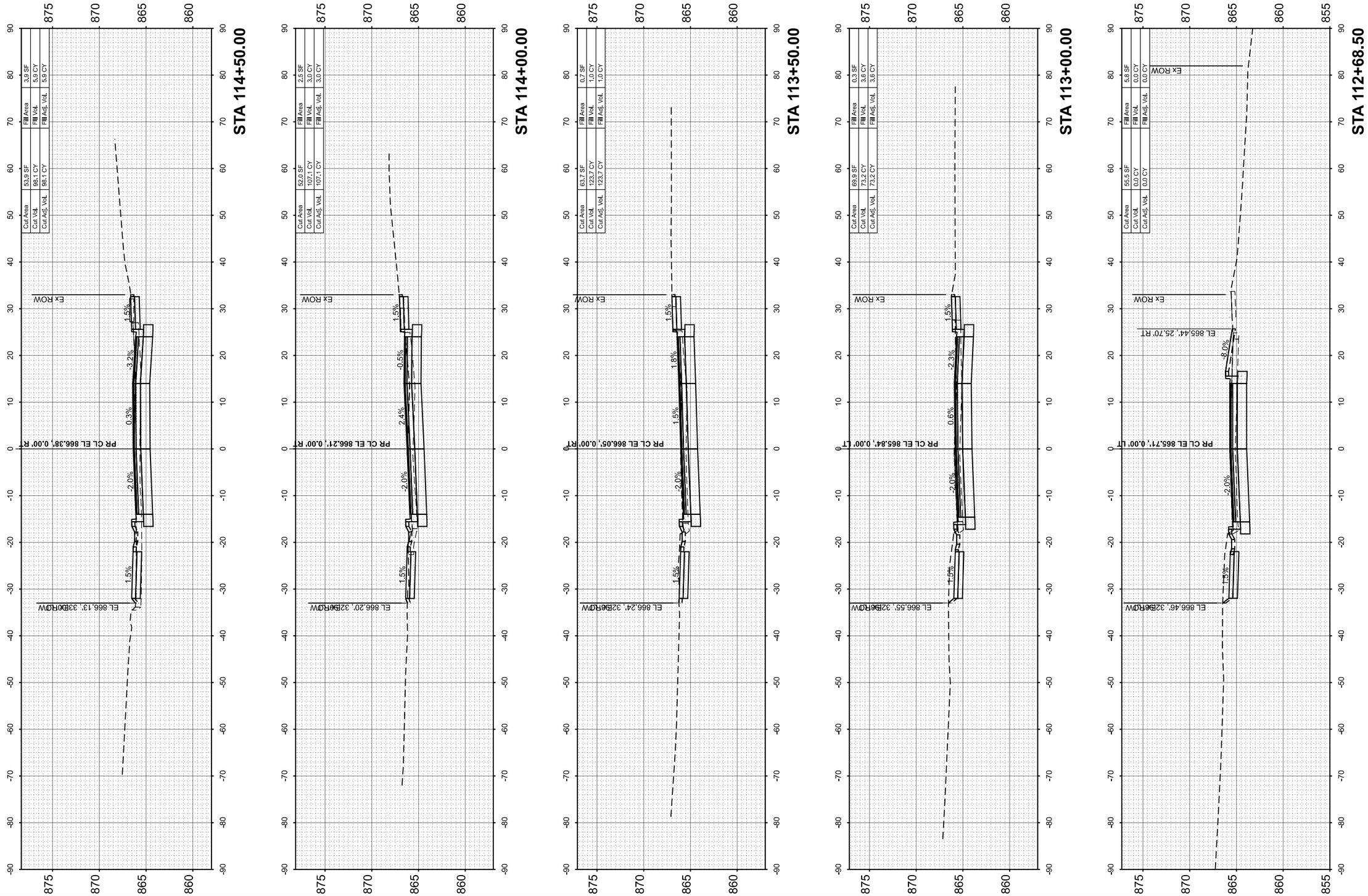

MODEL: PrCL-Besinger - 112+68.50 [Sheet]
FILE NAME: \\hrgreen.com\hrg\Data\2020\201569\CAD\Sheets\201569-sht-xs.dgn

HRGreen.com
Illinois Professional Design Firm
184-001322

USER NAME = jhorwit	DESIGNED -	REVISED -
	DRAWN - JCH	REVISED -
PLOT SCALE = 0.16666633 ' / in.	CHECKED -	REVISED -
PLOT DATE = 6/12/2025	DATE - 6/12/2025	REVISED -

STATE OF ILLINOIS
DEPARTMENT OF TRANSPORTATION

CROSS SECTIONS
L.W. BESINGER DRIVE

SCALE: 1"=10' | SHEET 1 OF 16 SHEETS | STA. TO STA.

F.A.U. RTE.	SECTION	COUNTY	TOTAL SHEETS	SHEET NO.
4006	22-00094-00-FP	KANE	105	90
		CONTRACT NO.	61L58	
		ILLINOIS	FED. AID PROJECT	

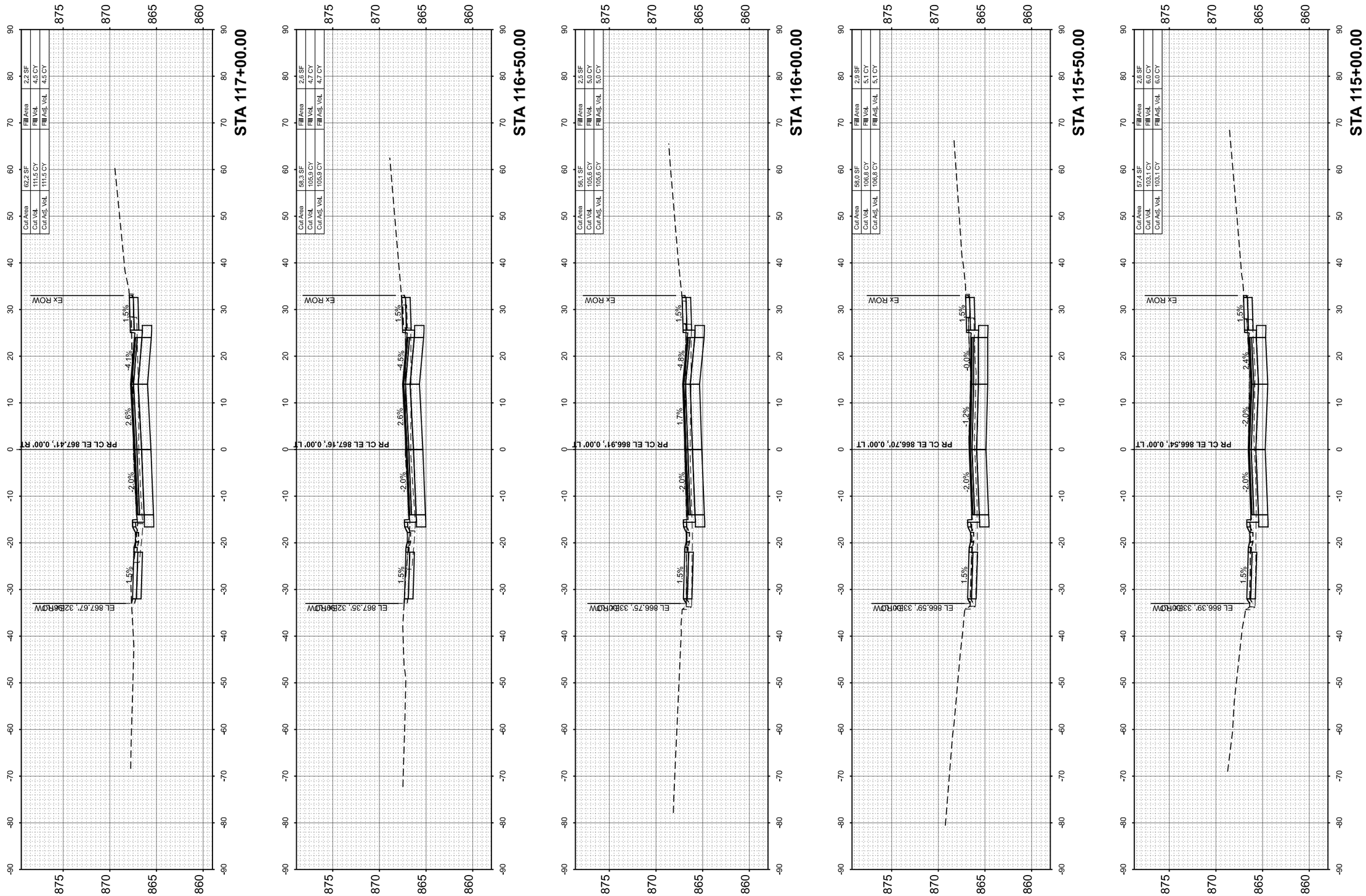

FINAL SURVEY		BY	DATE
	SURVEYED		
	PLOTTED		
NOTE BOOK	TEMPLATE		
	AVERAGES		
NO.	AREAS CHECKED		

ORIGINAL SURVEY		BY	DATE
	SURVEYED		
	PLOTTED		
NOTE BOOK	TEMPLATE		
	AVERAGES		
NO.	AREAS CHECKED		

MODEL: PrCL-Besinger - 115+00.00 [Sheet]
FILE NAME: \\hrgreen.com\hrg\Data\2020\2015569\CAD\Sheets\2015569-sht-xs.dgn

HRGreen.com
Illinois Professional Design Firm
184-001322

USER NAME = jhorwit	DESIGNED -	REVISED -
	DRAWN - JCH	REVISED -
PLOT SCALE = 0.16666633 ' / in.	CHECKED -	REVISED -
PLOT DATE = 6/12/2025	DATE - 6/12/2025	REVISED -

STATE OF ILLINOIS
DEPARTMENT OF TRANSPORTATION

CROSS SECTIONS
L.W. BESINGER DRIVE

SCALE: 1"=10' | SHEET 2 OF 16 SHEETS | STA. TO STA.

F.A.U. RTE.	SECTION	COUNTY	TOTAL SHEETS	SHEET NO.
4006	22-00094-00-FP	KANE	105	91
		CONTRACT NO. 61L58		
		ILLINOIS	FED. AID PROJECT	

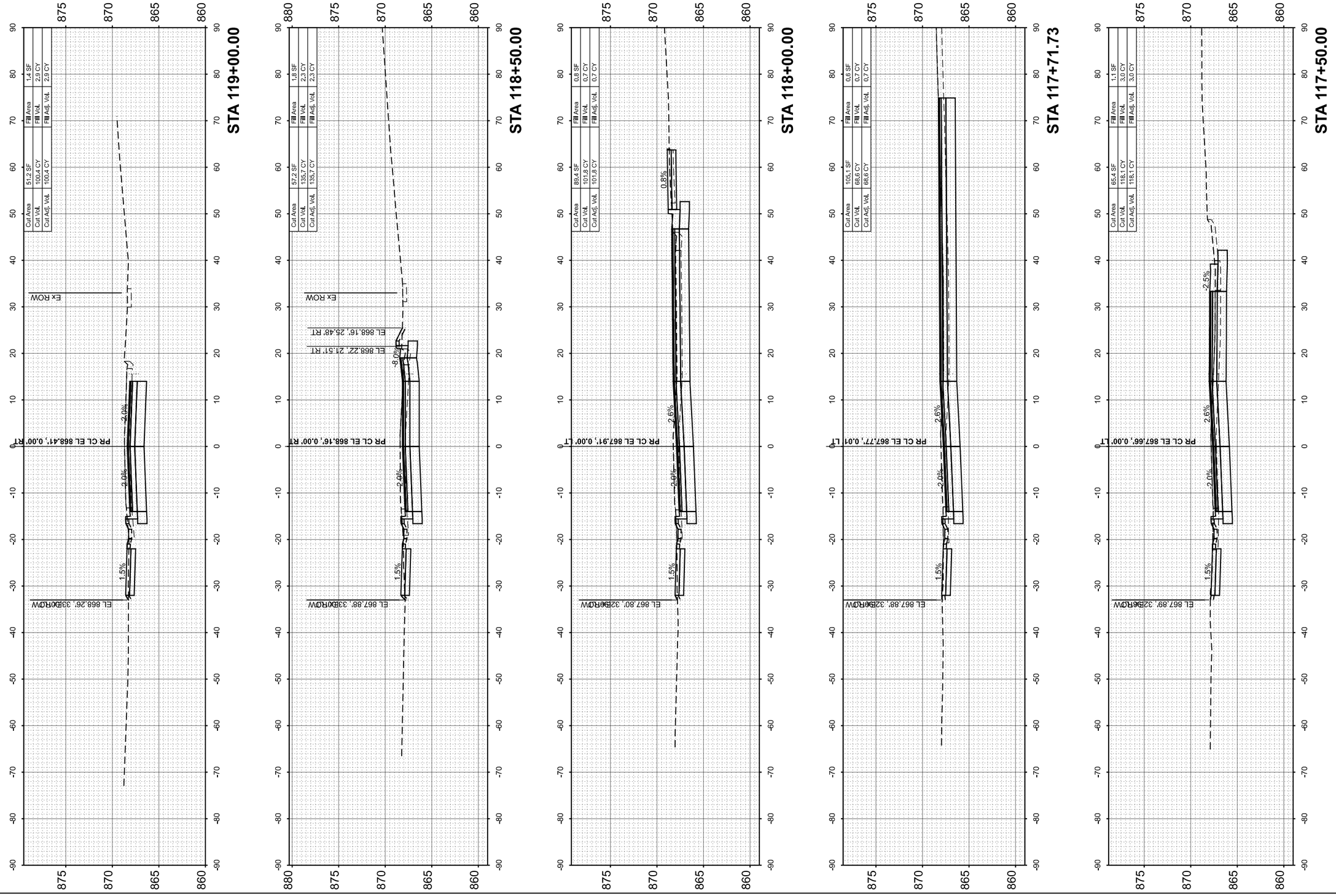

FINAL SURVEY		BY	DATE
NOTE BOOK	SURVEYED		
	PLOTTED		
	TEMPLATE		
	AREAS		
NO.	AREAS CHECKED		

ORIGINAL SURVEY		BY	DATE
NOTE BOOK	SURVEYED		
	PLOTTED		
	TEMPLATE		
	AREAS		
NO.	AREAS CHECKED		

MODEL: PrCL-Besinger - 117+50.00 [Sheet]
FILE NAME: \\hrgreen.com\hrg\Data\2020\201569\CAD\Sheets\201569-sht-xs.dgn

HRGreen.com
Illinois Professional Design Firm
184-001322

USER NAME = jhorwit	DESIGNED -	REVISED -
	DRAWN - JCH	REVISED -
PLOT SCALE = 0.16666633 ' / In.	CHECKED -	REVISED -
PLOT DATE = 6/12/2025	DATE - 6/12/2025	REVISED -

STATE OF ILLINOIS
DEPARTMENT OF TRANSPORTATION

CROSS SECTIONS
L.W. BESINGER DRIVE

SCALE: 1"=10' | SHEET 3 OF 16 SHEETS | STA. TO STA.

F.A.U. RTE.	SECTION	COUNTY	TOTAL SHEETS	SHEET NO.
4006	22-00094-00-FP	KANE	105	92
		CONTRACT NO.	61L58	
		ILLINOIS	FED. AID PROJECT	

FINAL SURVEY		BY	DATE
NOTE BOOK	SURVEYED		
	PLOTTED		
	TEMPLATE		
	AREAS		
NO.	AREAS CHECKED		

ORIGINAL SURVEY		BY	DATE
NOTE BOOK	SURVEYED		
	PLOTTED		
	TEMPLATE		
	AREAS		
NO.	AREAS CHECKED		

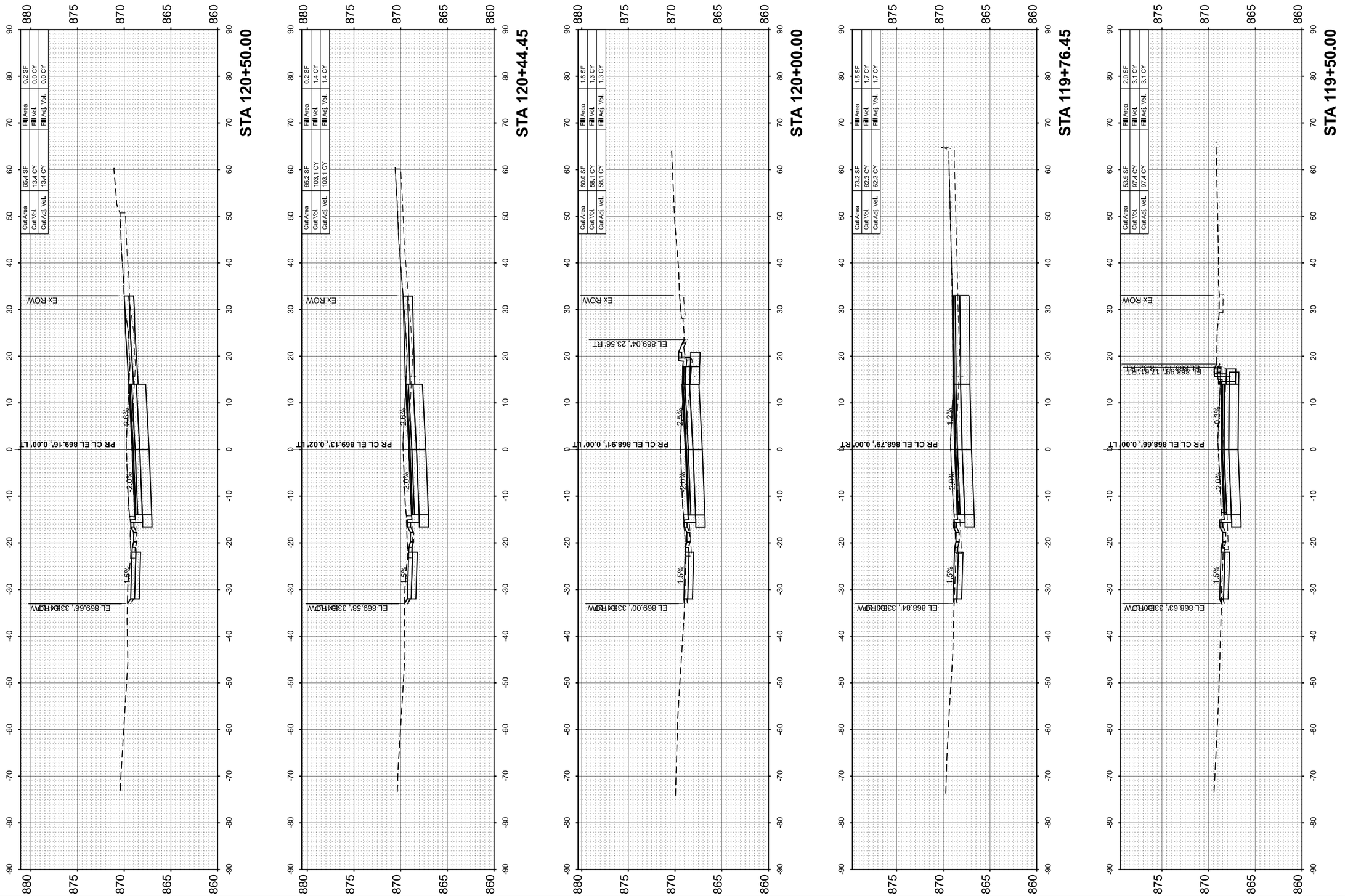

MODEL: PrCL-Besinger - 119+50.00 [Sheet]
FILE NAME: \\hrgreen.com\hrgData\2020\201569\CAD\Sheets\201569-sht-xs.dgn

HRGreen.com
Illinois Professional Design Firm
184-001322

USER NAME = jhorvitt	DESIGNED -	REVISED -	
	DRAWN - JCH	REVISED -	
PLOT SCALE = 0.16666633 ' / in.	CHECKED -	REVISED -	
PLOT DATE = 6/12/2025	DATE - 6/12/2025	REVISED -	

STATE OF ILLINOIS
DEPARTMENT OF TRANSPORTATION

CROSS SECTIONS
L.W. BESINGER DRIVE

SCALE: 1"=10' | SHEET 4 OF 16 SHEETS | STA. | TO STA.

F.A.U. RTE.	SECTION	COUNTY	TOTAL SHEETS	SHEET NO.
4006	22-00094-00-FP	KANE	105	93
		CONTRACT NO.	61L58	
		ILLINOIS	FED. AID PROJECT	

FINAL SURVEY		BY	DATE
NOTE BOOK	SURVEYED		
	PLOTTED		
	TEMPLATE		
	AREAS		
NO.	AREAS CHECKED		

ORIGINAL SURVEY		BY	DATE
NOTE BOOK	SURVEYED		
	PLOTTED		
	TEMPLATE		
	AREAS		
NO.	AREAS CHECKED		

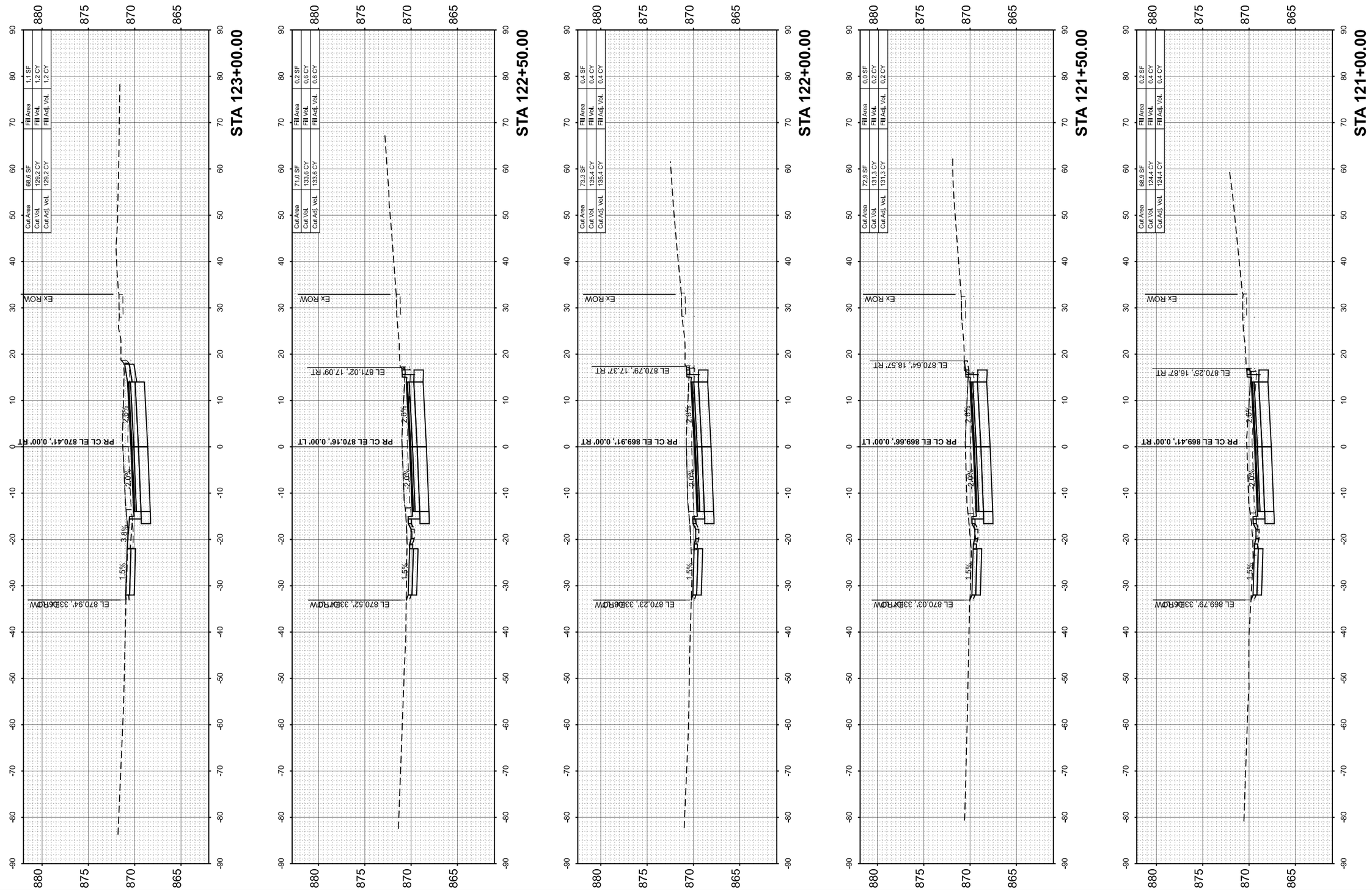

MODEL: PrCL-Besinger - 121+00.00 [Sheet]
FILE NAME: \\hrgreen.com\hrg\Data\2020\201569\CAD\Sheets\201569-sht-xs.dgn

HRGreen.com
Illinois Professional Design Firm
184-001322

USER NAME = jhorwit	DESIGNED -	REVISED -
	DRAWN - JCH	REVISED -
PLOT SCALE = 0.16666633 ' / In.	CHECKED -	REVISED -
PLOT DATE = 6/12/2025	DATE - 6/12/2025	REVISED -

STATE OF ILLINOIS
DEPARTMENT OF TRANSPORTATION

CROSS SECTIONS
L.W. BESINGER DRIVE

SCALE: 1"=10' | SHEET 5 OF 16 SHEETS | STA. | TO STA.

F.A.U. RTE.	SECTION	COUNTY	TOTAL SHEETS	SHEET NO.
4006	22-00094-00-FP	KANE	105	94
		CONTRACT NO.	61L58	
		ILLINOIS	FED. AID PROJECT	

FINAL SURVEY		BY	DATE
NOTE BOOK	SURVEYED		
	PLOTTED		
	TEMPLATE		
	AREAS		
NO.	AREAS CHECKED		

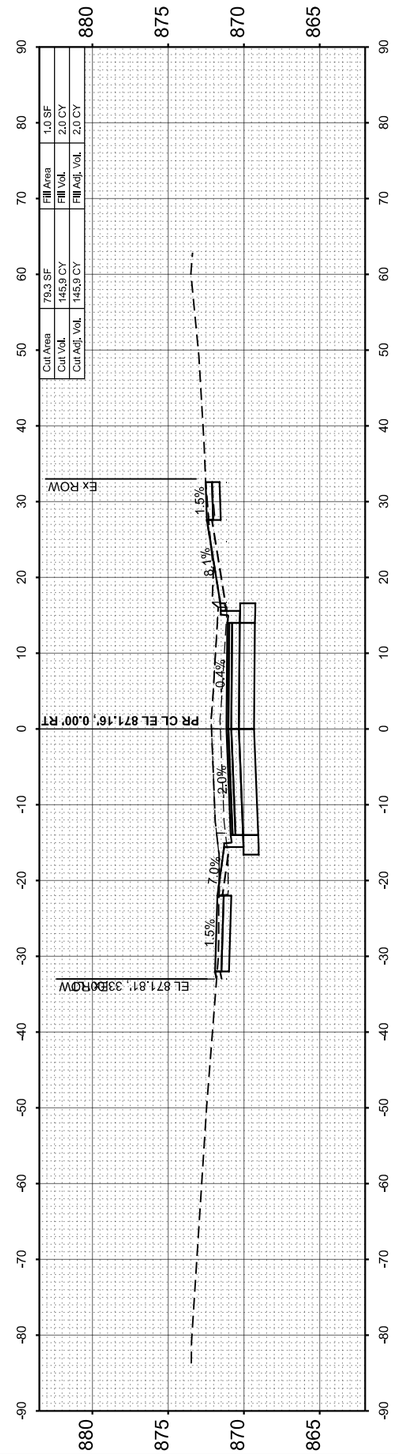

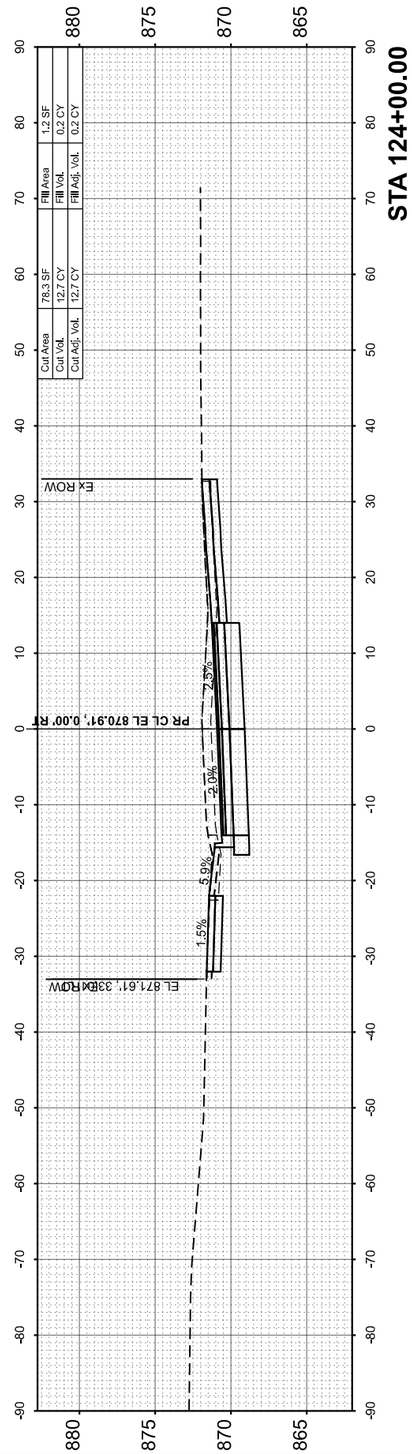

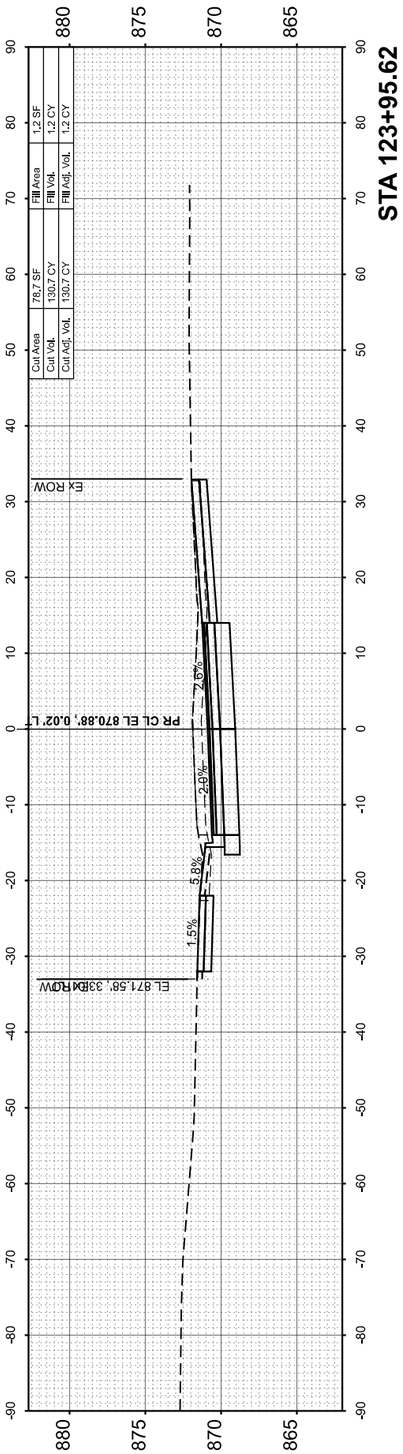

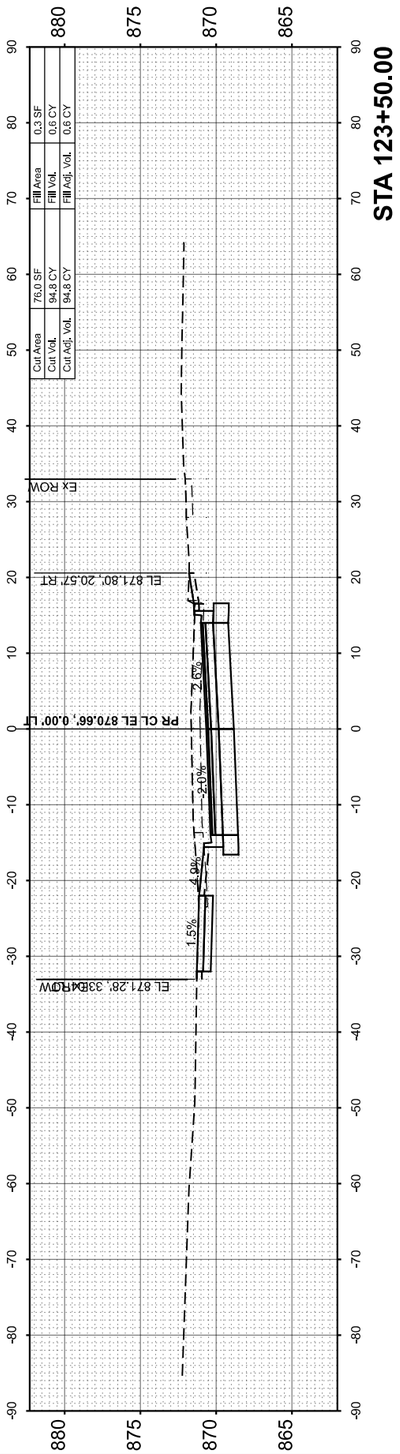

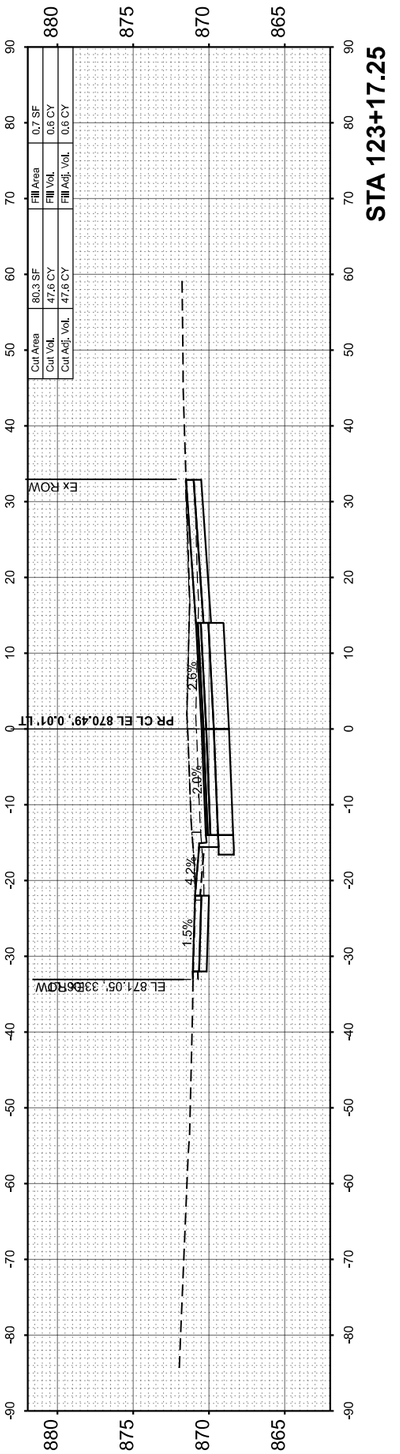

ORIGINAL SURVEY		BY	DATE
NOTE BOOK	SURVEYED		
	PLOTTED		
	TEMPLATE		
	AREAS		
NO.	AREAS CHECKED		

MODEL: PrCL-Besinger - 123+17.25 [Sheet]
FILE NAME: \\hrgreen.com\hrg\Data\2020\201569\CAD\Sheets\201569-sht-xs.dgn

HRGreen.com
Illinois Professional Design Firm
184-001322

USER NAME = jhorwit	DESIGNED -	REVISED -
	DRAWN - JCH	REVISED -
PLOT SCALE = 0.16666633 ' / in.	CHECKED -	REVISED -
PLOT DATE = 6/12/2025	DATE - 6/12/2025	REVISED -

STATE OF ILLINOIS
DEPARTMENT OF TRANSPORTATION

CROSS SECTIONS
L.W. BESINGER DRIVE

SCALE: 1"=10' | SHEET 6 OF 16 SHEETS | STA. | TO STA.

F.A.U. RTE.	SECTION	COUNTY	TOTAL SHEETS	SHEET NO.
4006	22-00094-00-FP	KANE	105	95
		CONTRACT NO.	61L58	
		ILLINOIS	FED. AID PROJECT	

FINAL SURVEY		BY	DATE
	SURVEYED		
	PLOTTED		
NOTE BOOK	TEMPLATE		
	AREAS		
NO.	AREAS CHECKED		

ORIGINAL SURVEY		BY	DATE
	SURVEYED		
	PLOTTED		
NOTE BOOK	TEMPLATE		
	AREAS		
NO.	AREAS CHECKED		

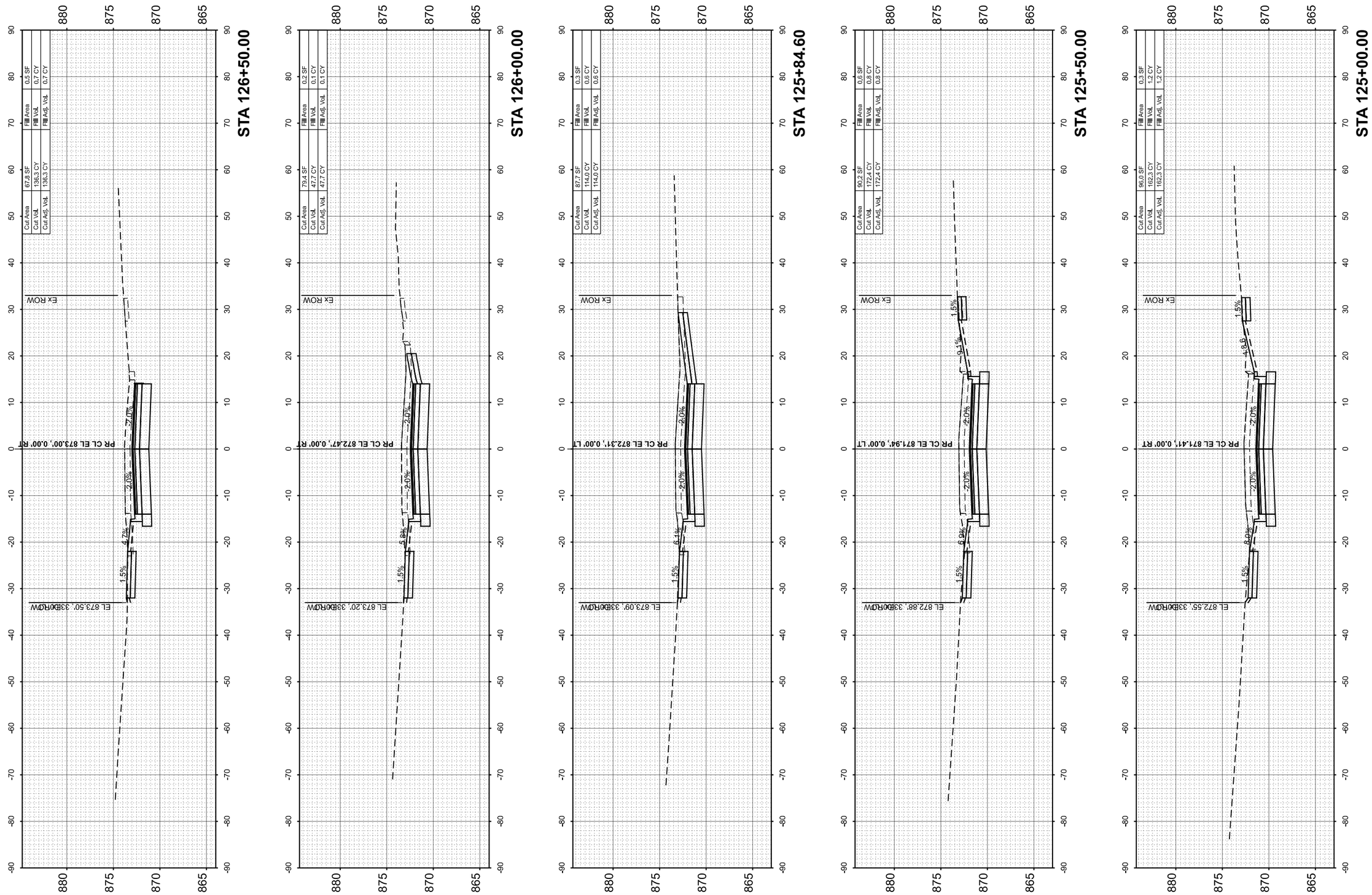

MODEL: PrCL-Besinger - 125+00.00 [Sheet]
FILE NAME: \\hrgreen.com\hrg\Data\2020\201569\CAD\Sheets\201569-sht-xs.dgn

HRGreen.com
Illinois Professional Design Firm
184-001322

USER NAME = jhorwit	DESIGNED -	REVISED -
	DRAWN - JCH	REVISED -
PLOT SCALE = 0.16666633 ' / in.	CHECKED -	REVISED -
PLOT DATE = 6/12/2025	DATE - 6/12/2025	REVISED -

STATE OF ILLINOIS
DEPARTMENT OF TRANSPORTATION

CROSS SECTIONS
L.W. BESINGER DRIVE

SCALE: 1"=10' | SHEET 7 OF 16 SHEETS | STA. | TO STA.

F.A.U. RTE.	SECTION	COUNTY	TOTAL SHEETS	SHEET NO.
4006	22-00094-00-FP	KANE	105	96

CONTRACT NO. 61L58

ILLINOIS | FED. AID PROJECT

FINAL SURVEY		BY	DATE
NOTE BOOK	SURVEYED		
	PLOTTED		
	TEMPLATE		
	AREAS		
NO.	AREAS CHECKED		

ORIGINAL SURVEY		BY	DATE
NOTE BOOK	SURVEYED		
	PLOTTED		
	TEMPLATE		
	AREAS		
NO.	AREAS CHECKED		

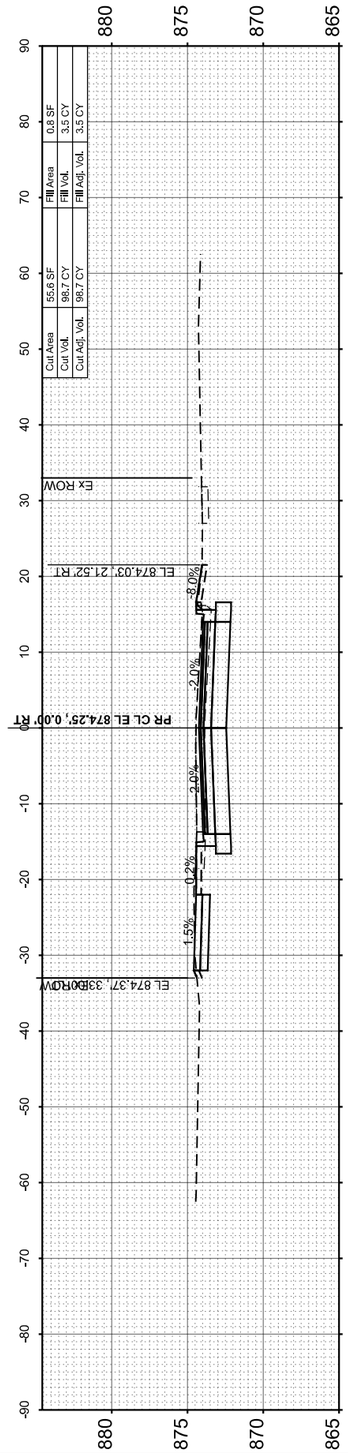

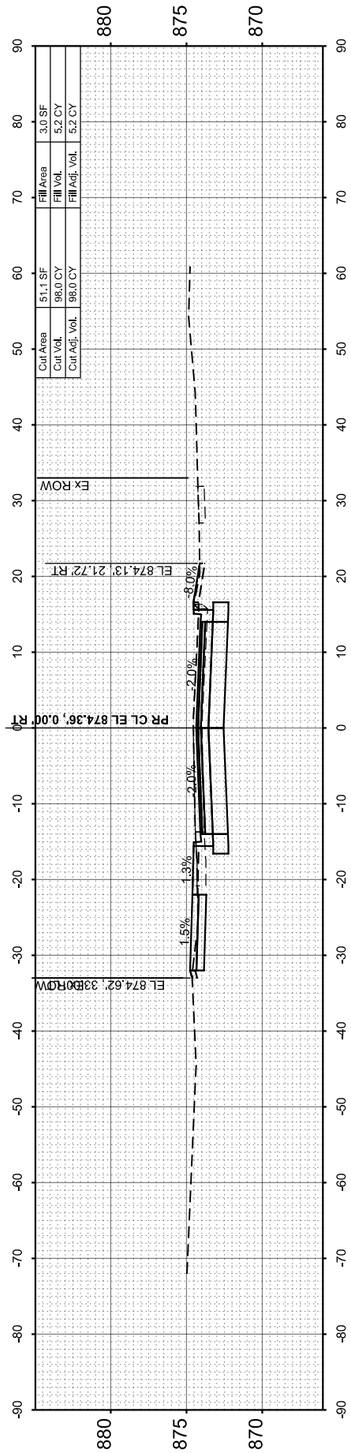

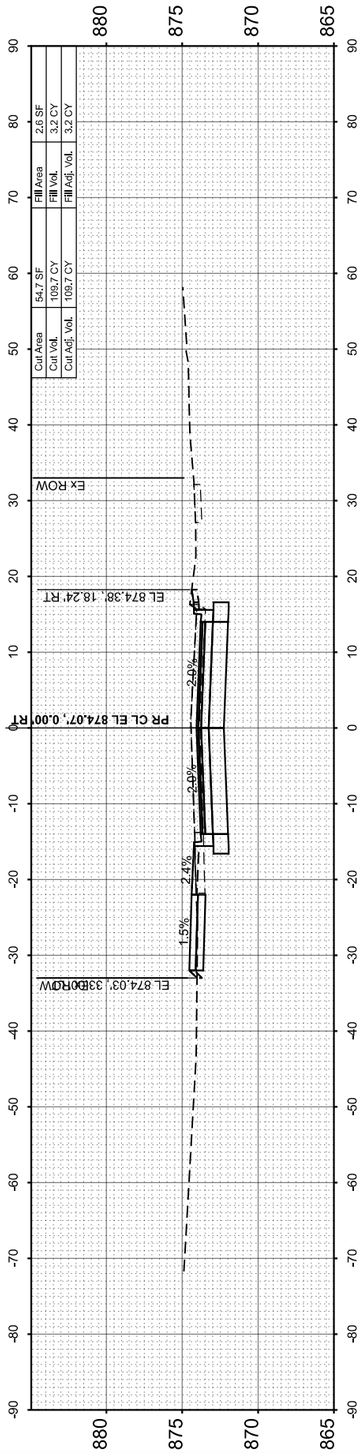

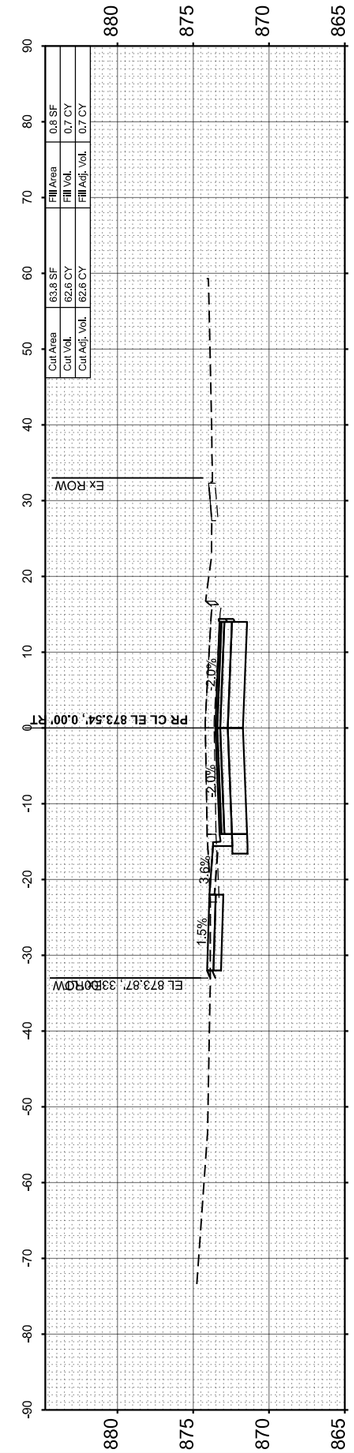

MODEL: PrCL-Besinger - 126+75.79 [Sheet]
FILE NAME: \\hrgreen.com\hrg\Data\2020\201569\CAD\Sheets\201569-sht-xs.dgn

HRGreen.com
Illinois Professional Design Firm
184-001322

USER NAME = jhorwit	DESIGNED -	REVISED -
	DRAWN - JCH	REVISED -
PLOT SCALE = 0.16666633 ' / in.	CHECKED -	REVISED -
PLOT DATE = 6/12/2025	DATE - 6/12/2025	REVISED -

STATE OF ILLINOIS
DEPARTMENT OF TRANSPORTATION

CROSS SECTIONS
L.W. BESINGER DRIVE

SCALE: 1"=10' | SHEET 8 OF 16 SHEETS | STA. | TO STA.

F.A.U. RTE.	SECTION	COUNTY	TOTAL SHEETS	SHEET NO.
4006	22-00094-00-FP	KANE	105	97
		CONTRACT NO.	61L58	
	ILLINOIS	FED. AID PROJECT		

FINAL SURVEY		BY	DATE
NOTE BOOK	SURVEYED		
	PLOTTED		
	TEMPLATE		
	AREAS		
NO.	AREAS CHECKED		

ORIGINAL SURVEY		BY	DATE
NOTE BOOK	SURVEYED		
	PLOTTED		
	TEMPLATE		
	AREAS		
NO.	AREAS CHECKED		

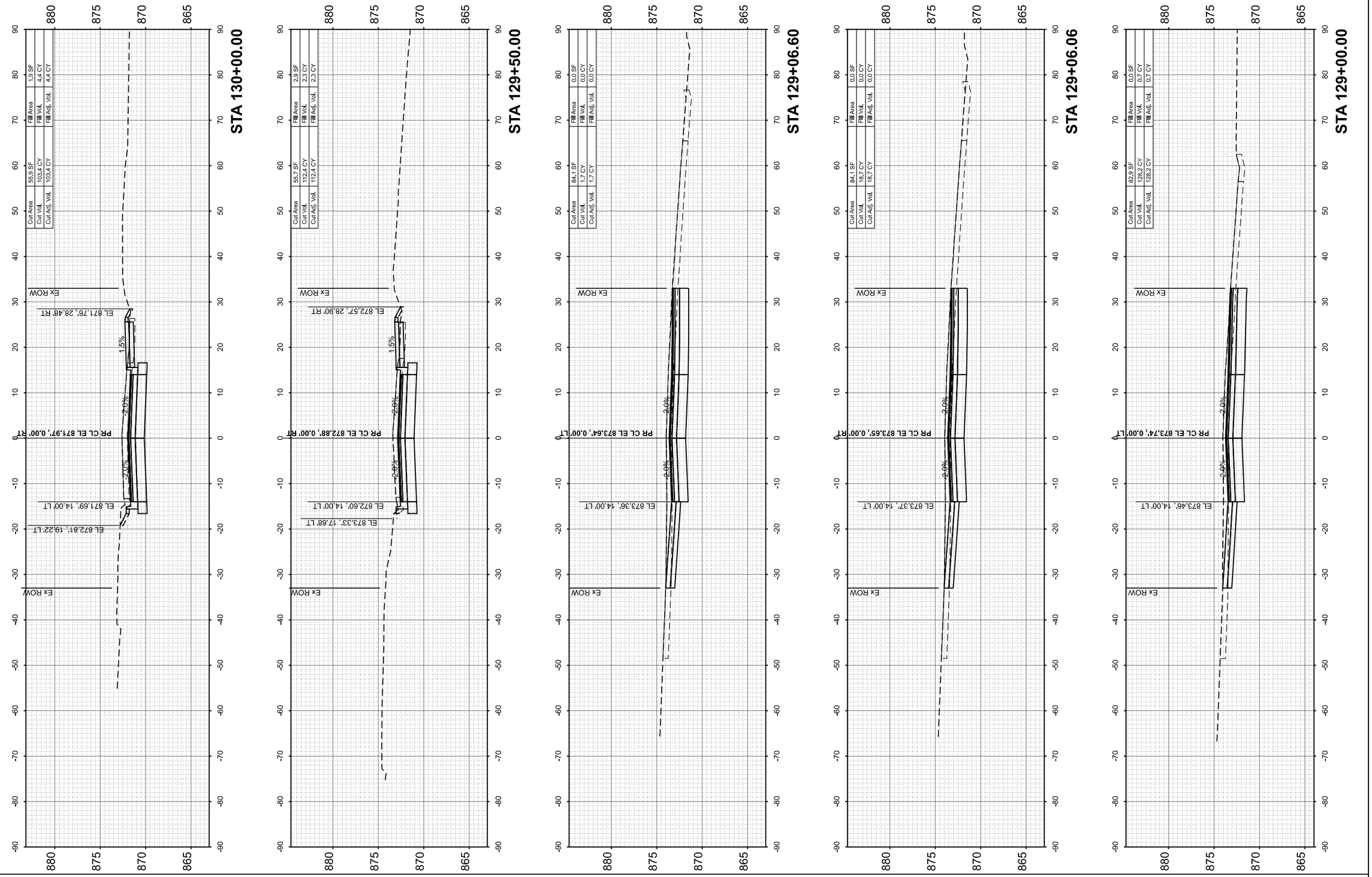

MODEL: PrCL-Besinger - 129+00.00 [Sheet]
FILE NAME: \\hrgreen.com\hrg\Data\2020\201569\CAD\Sheets\201569-sht-xs.dgn

HRGreen.com
Illinois Professional Design Firm
184-001322

USER NAME = jhorwitt	DESIGNED -	REVISED -
	DRAWN - JCH	REVISED -
PLOT SCALE = 0.16666633 ' / in.	CHECKED -	REVISED -
PLOT DATE = 6/12/2025	DATE - 6/12/2025	REVISED -

STATE OF ILLINOIS
DEPARTMENT OF TRANSPORTATION

CROSS SECTIONS
L.W. BESINGER DRIVE

SCALE: 1"=10' | SHEET 9 OF 16 SHEETS | STA. | TO STA.

F.A.U. RTE.	SECTION	COUNTY	TOTAL SHEETS	SHEET NO.
4006	22-00094-00-FP	KANE	105	98
		CONTRACT NO.	61L58	
		ILLINOIS	FED. AID PROJECT	

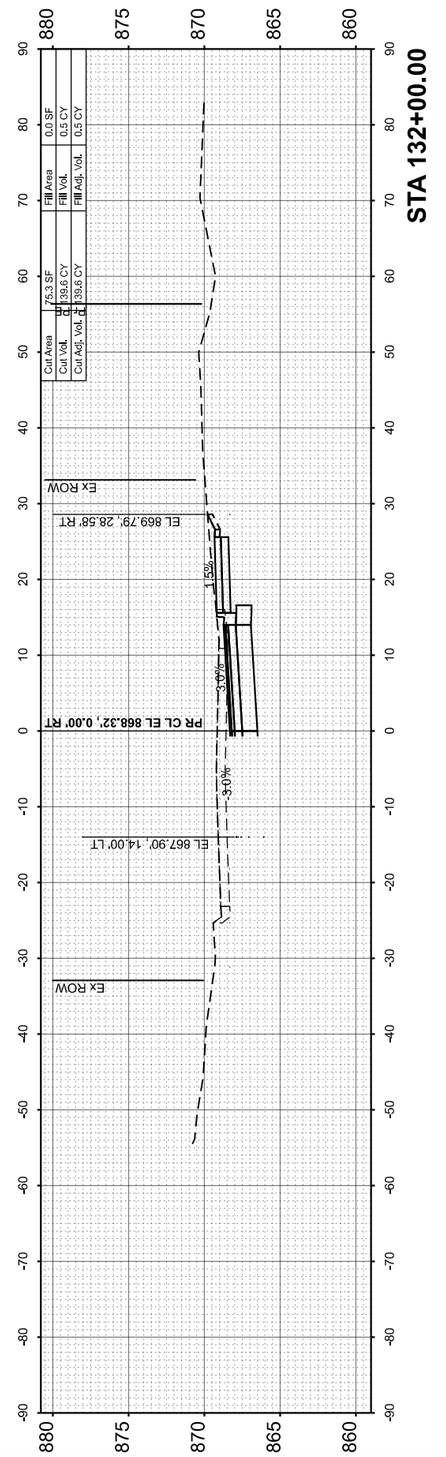

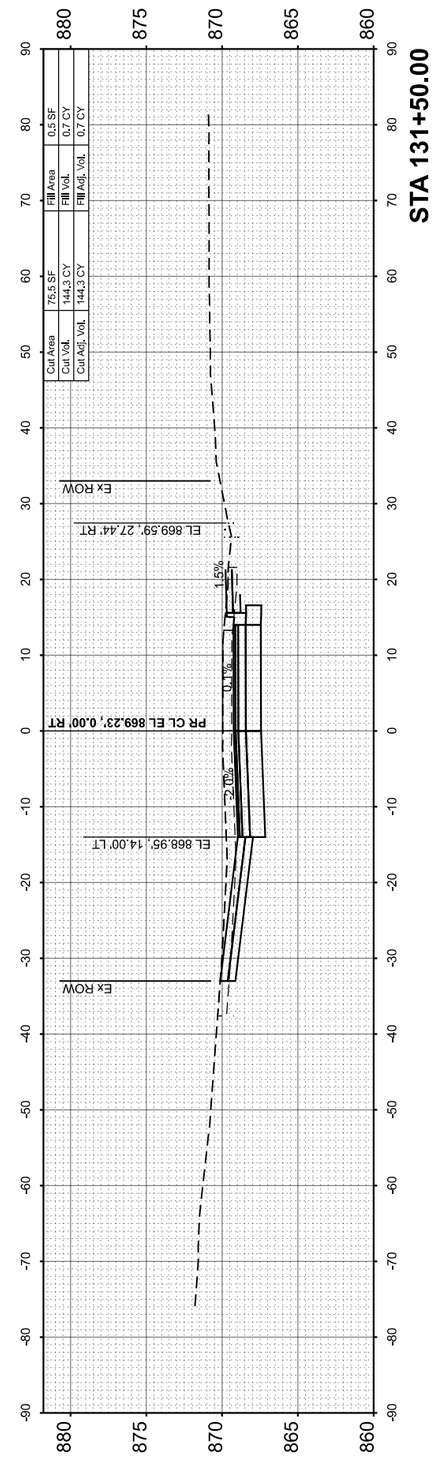

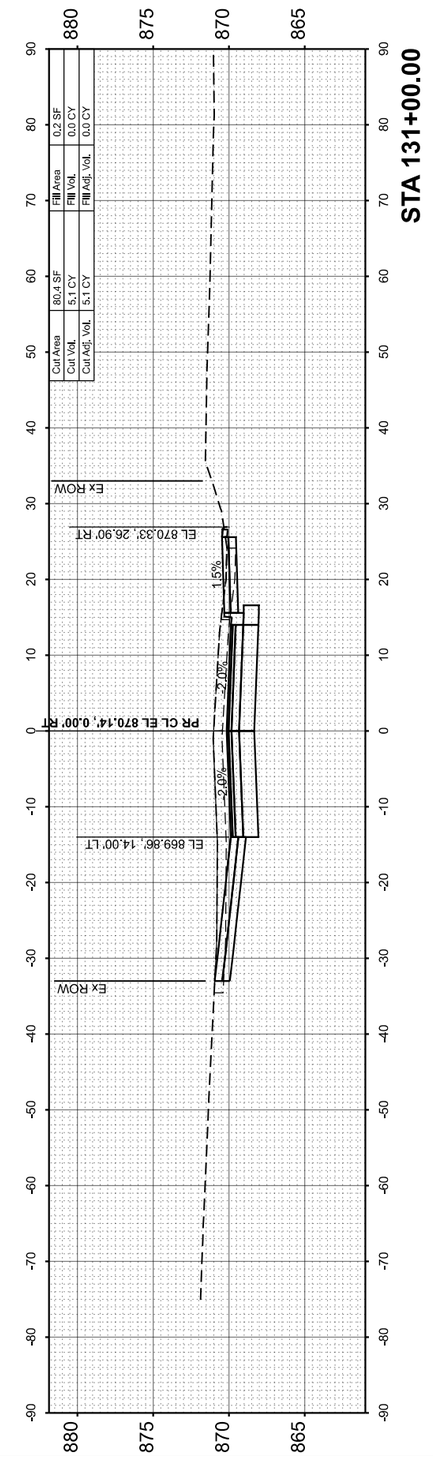

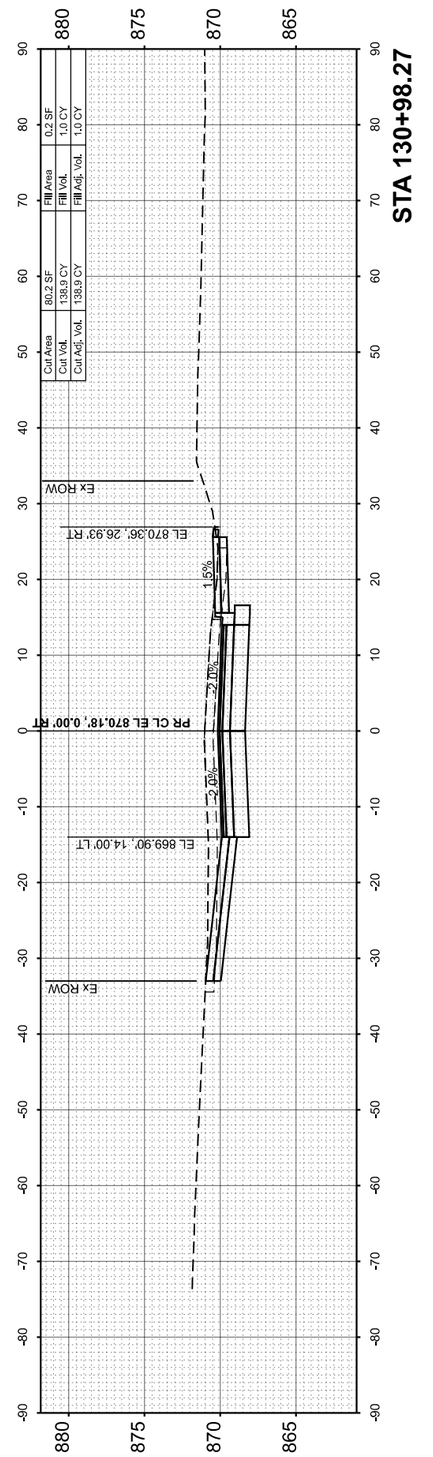

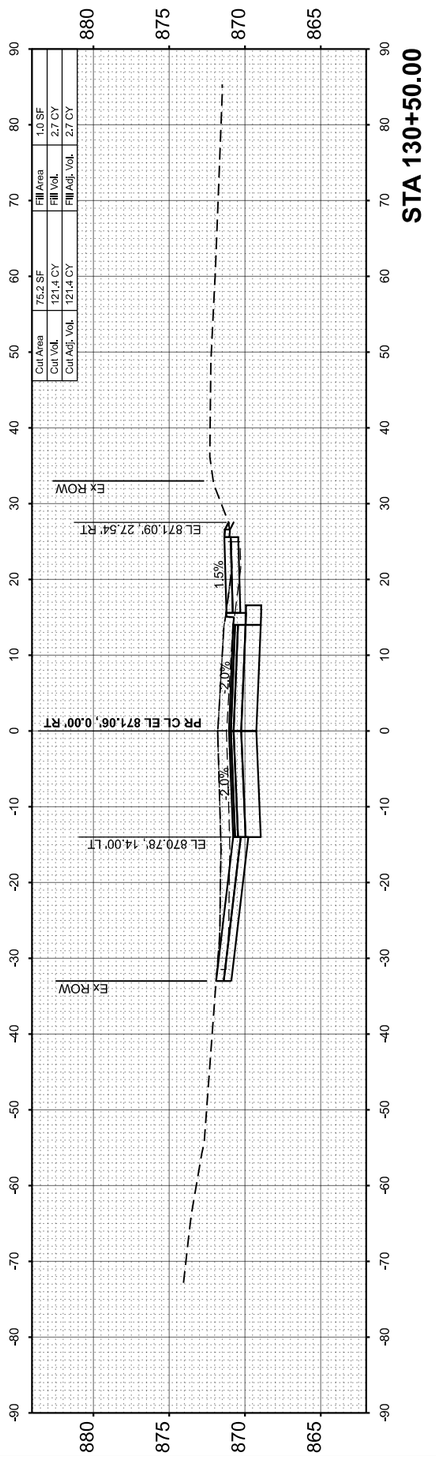

FINAL SURVEY		BY	DATE
	SURVEYED		
	PLOTTED		
NOTE BOOK	TEMPLATE		
	AREAS		
NO.	AREAS CHECKED		

ORIGINAL SURVEY		BY	DATE
	SURVEYED		
	PLOTTED		
NOTE BOOK	TEMPLATE		
	AREAS		
NO.	AREAS CHECKED		

MODEL: PrCL-Besinger - 130+50.00 [Sheet]
FILE NAME: \\hrgreen.com\hrg\Data\2020\201569\CAD\Sheets\201569-sht-xs.dgn

HRGreen.com
Illinois Professional Design Firm
184-001322

USER NAME = jhorwit	DESIGNED -	REVISED -
	DRAWN - JCH	REVISED -
PLOT SCALE = 0.16666633 ' / In.	CHECKED -	REVISED -
PLOT DATE = 6/12/2025	DATE - 6/12/2025	REVISED -

STATE OF ILLINOIS
DEPARTMENT OF TRANSPORTATION

CROSS SECTIONS
L.W. BESINGER DRIVE

SCALE: 1"=10' | SHEET 10 OF 16 SHEETS | STA. | TO STA.

F.A.U. RTE.	SECTION	COUNTY	TOTAL SHEETS	SHEET NO.
4006	22-00094-00-FP	KANE	105	99
		CONTRACT NO.	61L58	
		ILLINOIS	FED. AID PROJECT	

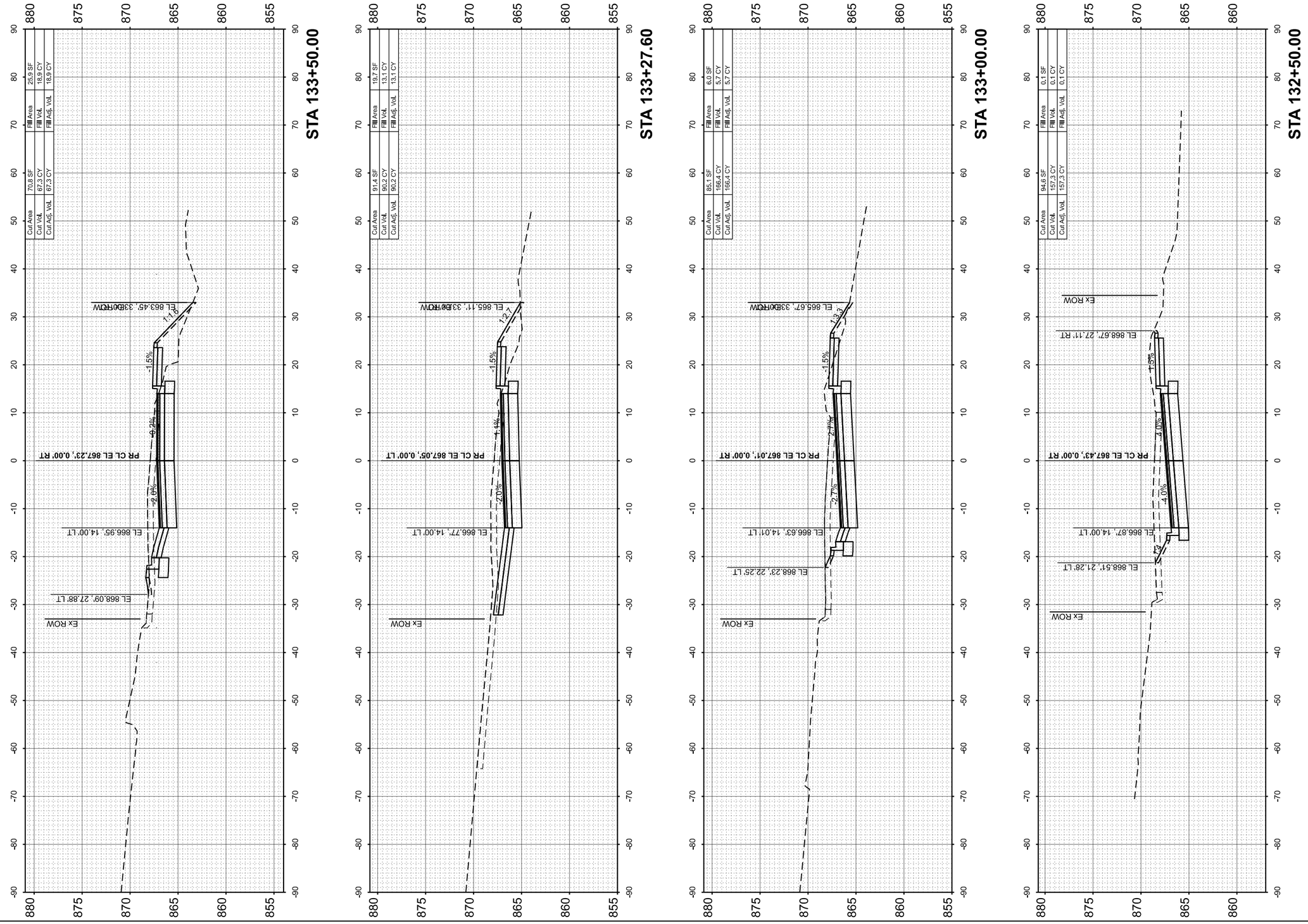

FINAL SURVEY	SURVEYED	BY	DATE
NOTE BOOK	PLOTTED		
NO.	TEMPLATE		
	AREAS		
	AREAS CHECKED		

ORIGINAL SURVEY	SURVEYED	BY	DATE
NOTE BOOK	PLOTTED		
NO.	TEMPLATE		
	AREAS		
	AREAS CHECKED		

MODEL: PrCL-Besinger - 132+50.00 [Sheet]
FILE NAME: \\hrgreen.com\hrg\Data\2020\201569\CAD\Sheets\201569-sht-xs.dgn

HRGreen.com
Illinois Professional Design Firm
184-001322

USER NAME = jhorwit	DESIGNED -	REVISED -
	DRAWN - JCH	REVISED -
PLOT SCALE = 0.16666633 ' / In.	CHECKED -	REVISED -
PLOT DATE = 6/12/2025	DATE - 6/12/2025	REVISED -

STATE OF ILLINOIS
DEPARTMENT OF TRANSPORTATION

CROSS SECTIONS
L.W. BESINGER DRIVE

SCALE: 1"=10' | SHEET 11 OF 16 SHEETS | STA. | TO STA.

F.A.U. RTE.	SECTION	COUNTY	TOTAL SHEETS	SHEET NO.
4006	22-00094-00-FP	KANE	105	100
		CONTRACT NO. 61L58		
		ILLINOIS	FED. AID PROJECT	

FINAL SURVEY		BY	DATE
NOTE BOOK	SURVEYED		
	PLOTTED		
	TEMPLATE		
	AREAS		
NO.	AREAS CHECKED		

ORIGINAL SURVEY		BY	DATE
NOTE BOOK	SURVEYED		
	PLOTTED		
	TEMPLATE		
	AREAS		
NO.	AREAS CHECKED		

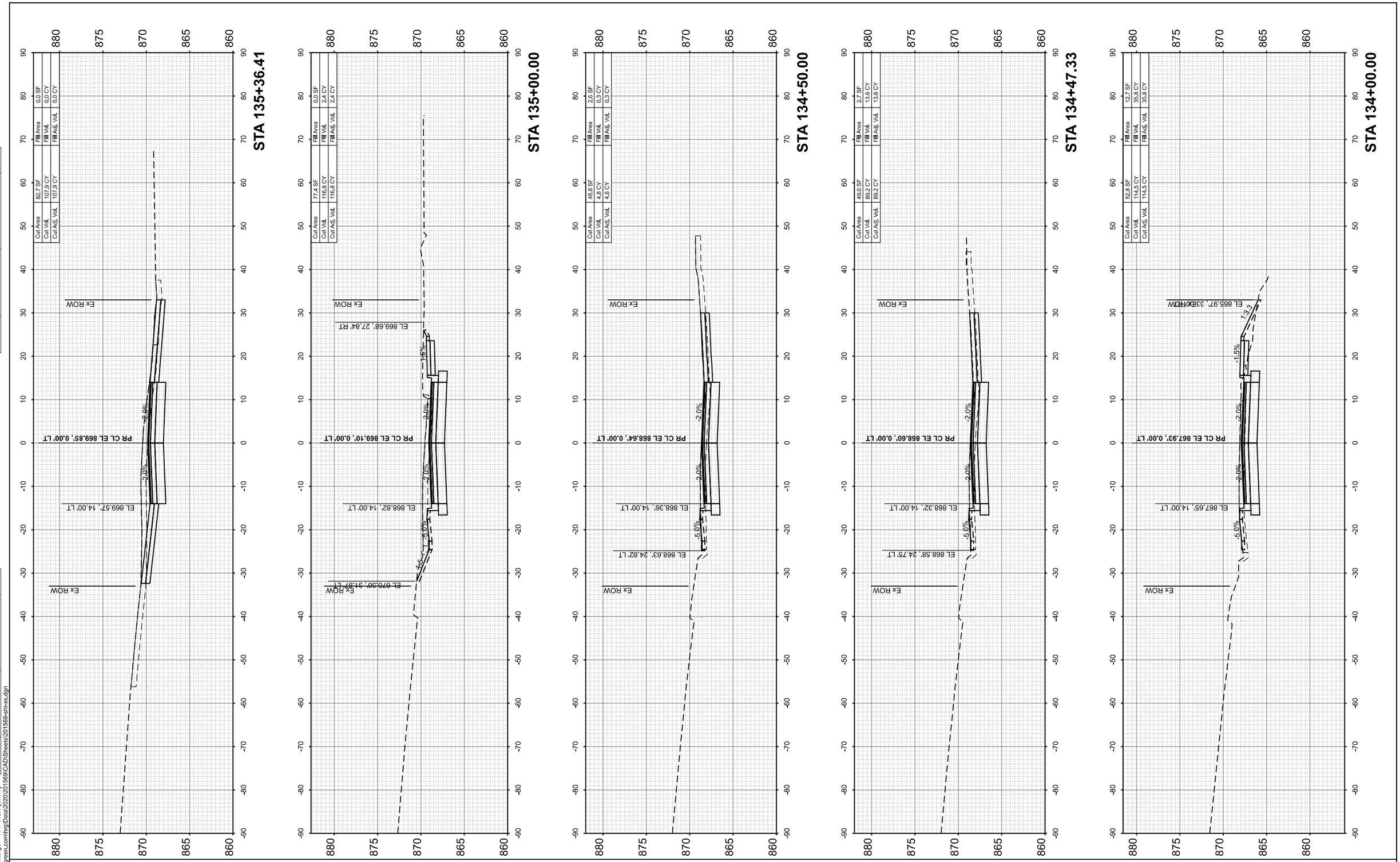

MODEL: PrCL-Besinger - 134+00.00 [Sheet]
FILE NAME: \\hrgreen.com\lrg\Data\2020\201569\CAD\Sheets\201569-ah1xs.dgn

HRGreen.com
Illinois Professional Design Firm
184-001322

USER NAME = jhorwit	DESIGNED -	REVISED -
	DRAWN - JCH	REVISED -
PLOT SCALE = 0.16666633 ' / in.	CHECKED -	REVISED -
PLOT DATE = 6/12/2025	DATE - 6/12/2025	REVISED -

STATE OF ILLINOIS
DEPARTMENT OF TRANSPORTATION

CROSS SECTIONS
L.W. BESINGER DRIVE

SCALE: 1"=10' | SHEET 12 OF 16 SHEETS | STA. | TO STA.

F.A.U. RTE.	SECTION	COUNTY	TOTAL SHEETS	SHEET NO.
4006	22-00094-00-FP	KANE	105	101

CONTRACT NO. 61L58

ILLINOIS | FED. AID PROJECT

FINAL SURVEY		BY	DATE
NOTE BOOK	SURVEYED		
	PLOTTED		
	TEMPLATE		
	AREAS		
NO.	AREAS CHECKED		

ORIGINAL SURVEY		BY	DATE
NOTE BOOK	SURVEYED		
	PLOTTED		
	TEMPLATE		
	AREAS		
NO.	AREAS CHECKED		

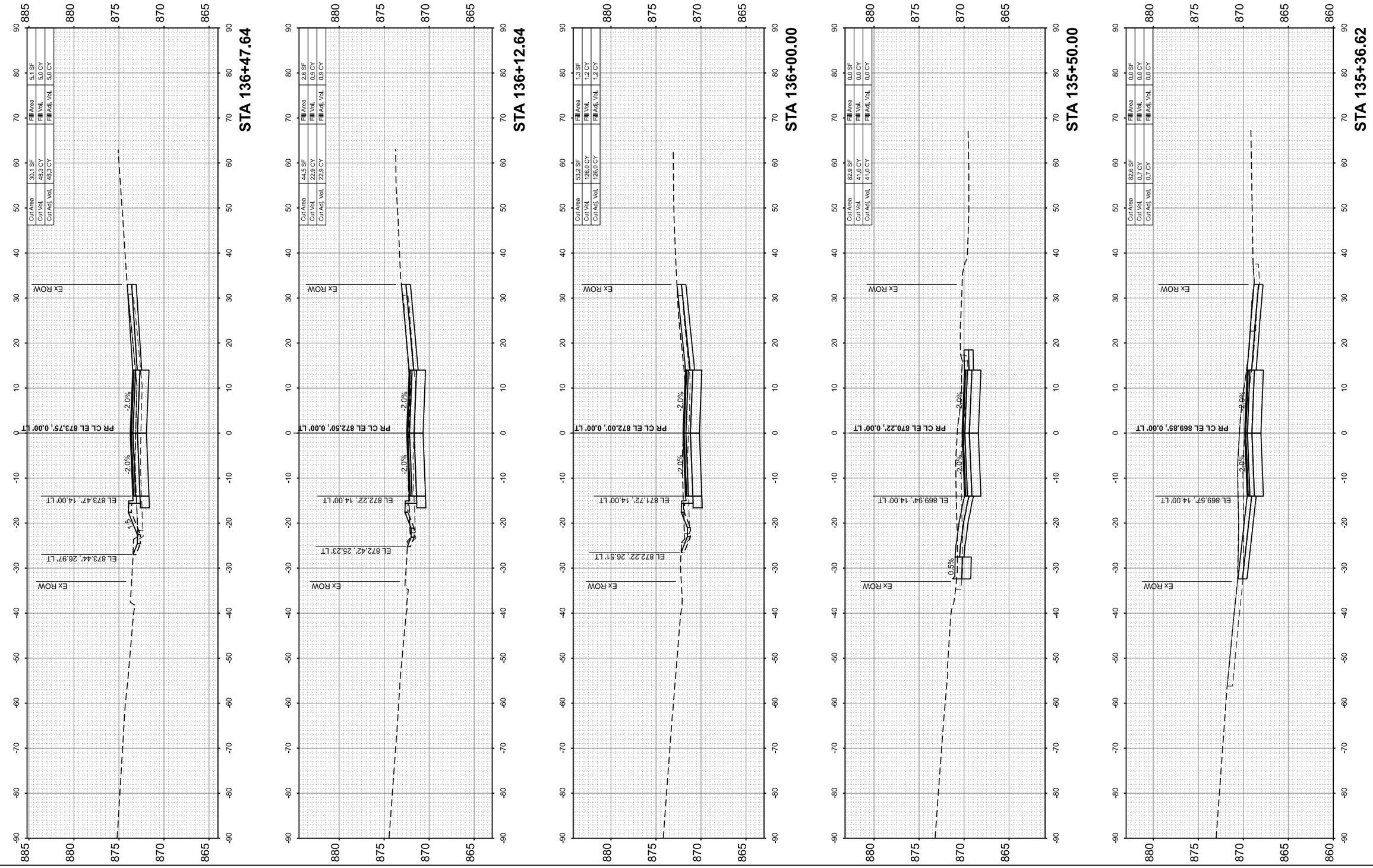

MODEL: PrCL-Besinger - 135+36.62 [Sheet]
FILE NAME: \\hrgreen.com\hrg\Data\2020\201569\CAD\Sheets\201569-sht-xs.dgn

HRGreen.com
Illinois Professional Design Firm
184-001322

USER NAME = jhorwit	DESIGNED -	REVISED -
	DRAWN - JCH	REVISED -
PLOT SCALE = 0.16666633 ' / In.	CHECKED -	REVISED -
PLOT DATE = 6/12/2025	DATE - 6/12/2025	REVISED -

STATE OF ILLINOIS
DEPARTMENT OF TRANSPORTATION

CROSS SECTIONS
L.W. BESINGER DRIVE

SCALE: 1"=10' | SHEET 13 OF 16 SHEETS | STA. | TO STA.

F.A.U. RTE.	SECTION	COUNTY	TOTAL SHEETS	SHEET NO.
4006	22-00094-00-FP	KANE	105	102
		CONTRACT NO. 61L58		
		ILLINOIS FED. AID PROJECT		

FINAL SURVEY		BY	DATE
NOTE BOOK	SURVEYED		
	PLOTTED		
	TEMPLATE		
	AREAS		
NO.	AREAS CHECKED		

ORIGINAL SURVEY		BY	DATE
NOTE BOOK	SURVEYED		
	PLOTTED		
	TEMPLATE		
	AREAS		
NO.	AREAS CHECKED		

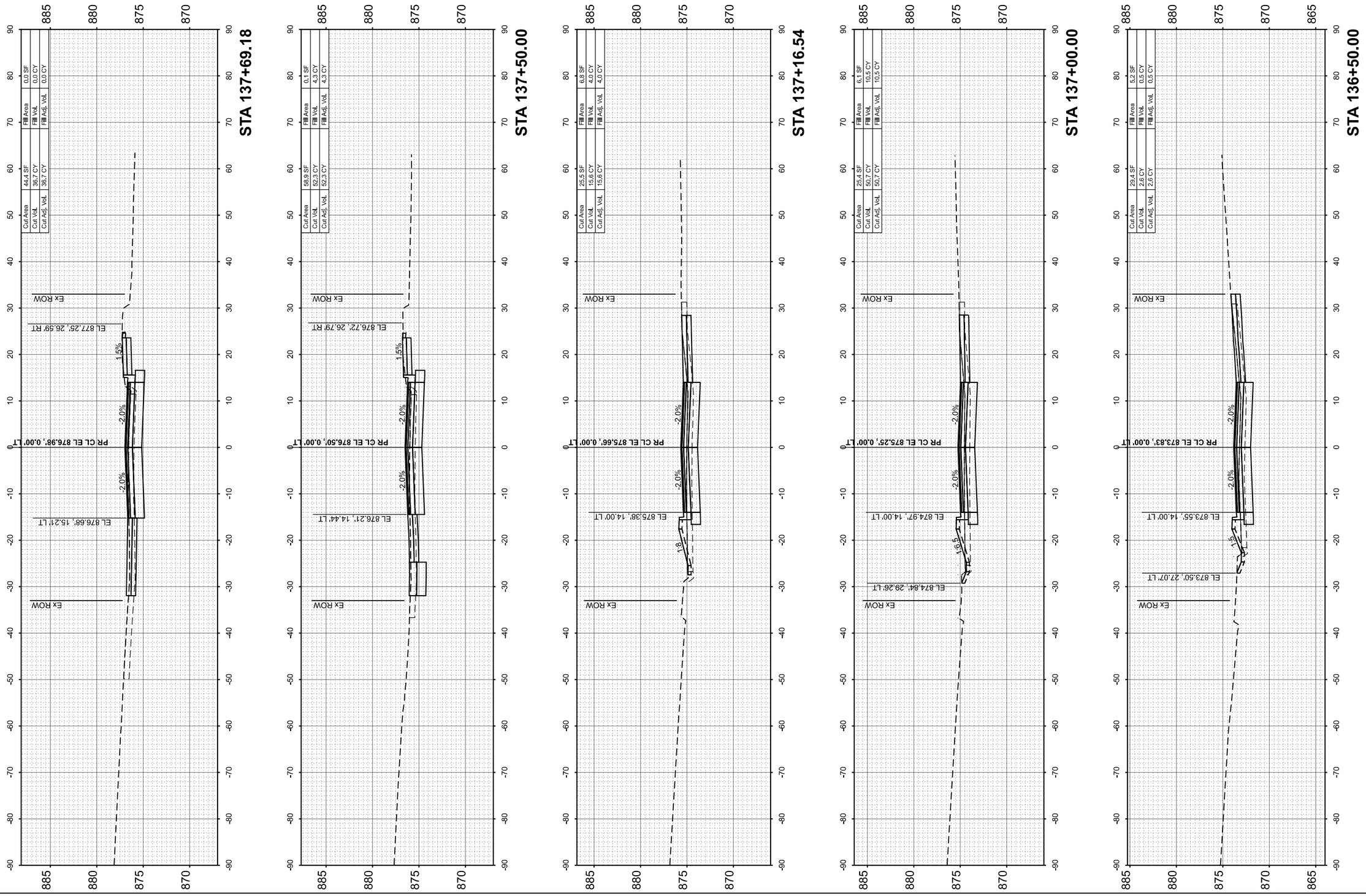

MODEL: PrCL-Besinger - 136+50.00 [Sheet]
FILE NAME: \\hrgreen.com\hrg\Data\2020\201569\CAD\Sheets\201569-ah-xs.dgn

HRGreen.com
Illinois Professional Design Firm
184-001322

USER NAME = jhorwit	DESIGNED -	REVISED -
	DRAWN - JCH	REVISED -
PLOT SCALE = 0.16666633 ' / in.	CHECKED -	REVISED -
PLOT DATE = 6/12/2025	DATE - 6/12/2025	REVISED -

STATE OF ILLINOIS
DEPARTMENT OF TRANSPORTATION

CROSS SECTIONS
L.W. BESINGER DRIVE

SCALE: 1"=10' | SHEET 14 OF 16 SHEETS | STA. | TO STA.

F.A.U. RTE.	SECTION	COUNTY	TOTAL SHEETS	SHEET NO.
4006	22-00094-00-FP	KANE	105	103
		CONTRACT NO.	61L58	
		ILLINOIS	FED. AID PROJECT	

FINAL SURVEY		BY	DATE
NOTE BOOK	SURVEYED		
	PLOTTED		
	TEMPLATE		
	AREAS		
NO.	AREAS CHECKED		

ORIGINAL SURVEY		BY	DATE
NOTE BOOK	SURVEYED		
	PLOTTED		
	TEMPLATE		
	AREAS		
NO.	AREAS CHECKED		

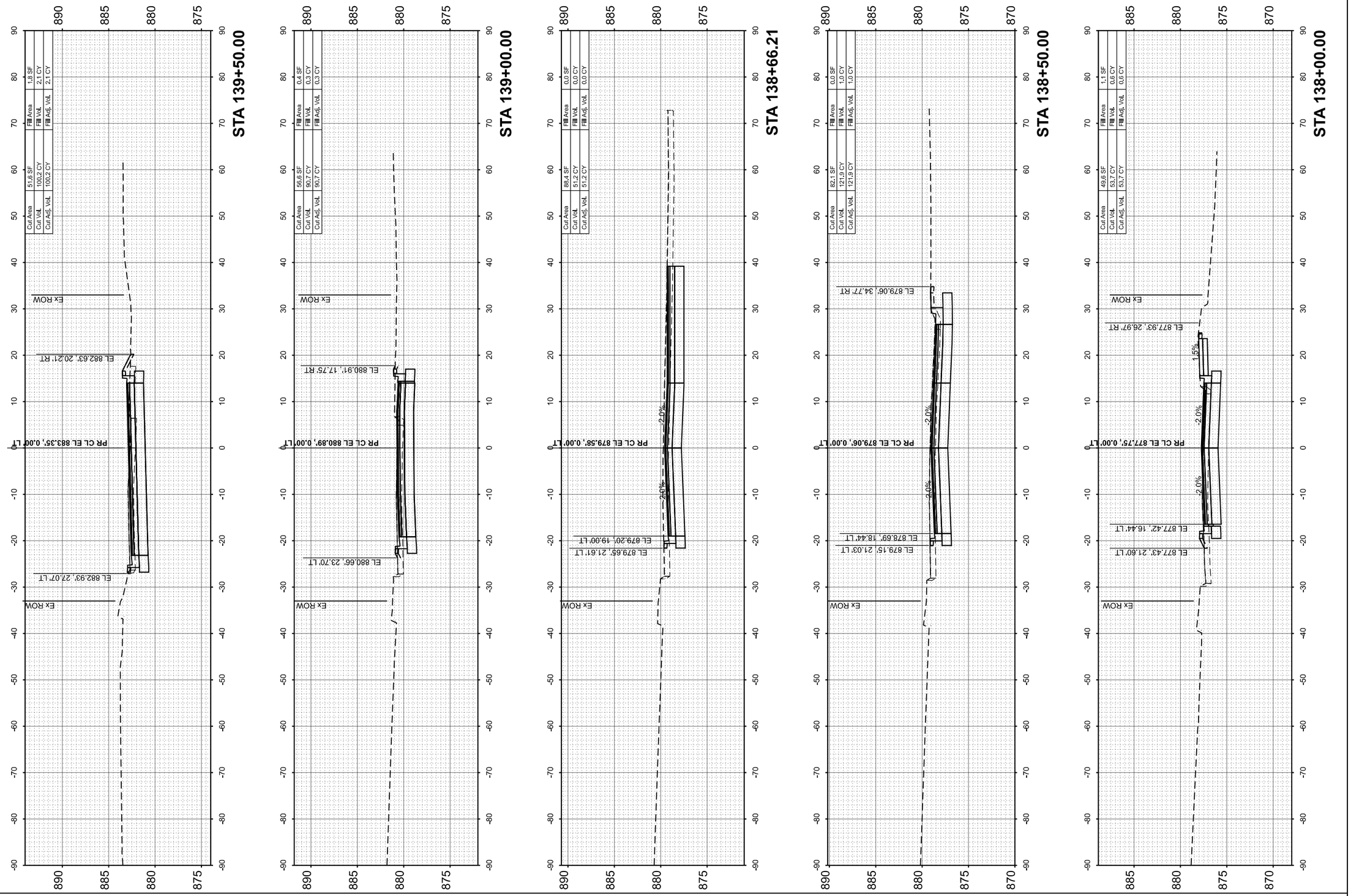

MODEL: PrCL-Besinger - 138+00.00 [Sheet]
FILE NAME: \\hrgreen.com\hrg\Data\2020\201569\CAD\Sheets\201569-sht-xs.dgn

HRGreen.com
Illinois Professional Design Firm
184-001322

USER NAME = jhorwit	DESIGNED -	REVISED -
	DRAWN - JCH	REVISED -
PLOT SCALE = 0.16666633 ' / in.	CHECKED -	REVISED -
PLOT DATE = 6/12/2025	DATE - 6/12/2025	REVISED -

STATE OF ILLINOIS
DEPARTMENT OF TRANSPORTATION

CROSS SECTIONS
L.W. BESINGER DRIVE

SCALE: 1"=10' | SHEET 15 OF 16 SHEETS | STA. | TO STA.

F.A.U. RTE.	SECTION	COUNTY	TOTAL SHEETS	SHEET NO.
4006	22-00094-00-FP	KANE	105	104
		CONTRACT NO. 61L58		
		ILLINOIS	FED. AID PROJECT	

FINAL SURVEY		BY	DATE
NOTE BOOK	SURVEYED		
	PLOTTED		
	TEMPLATE		
	AREAS		
NO.	AREAS CHECKED		

ORIGINAL SURVEY		BY	DATE
NOTE BOOK	SURVEYED		
	PLOTTED		
	TEMPLATE		
	AREAS		
NO.	AREAS CHECKED		

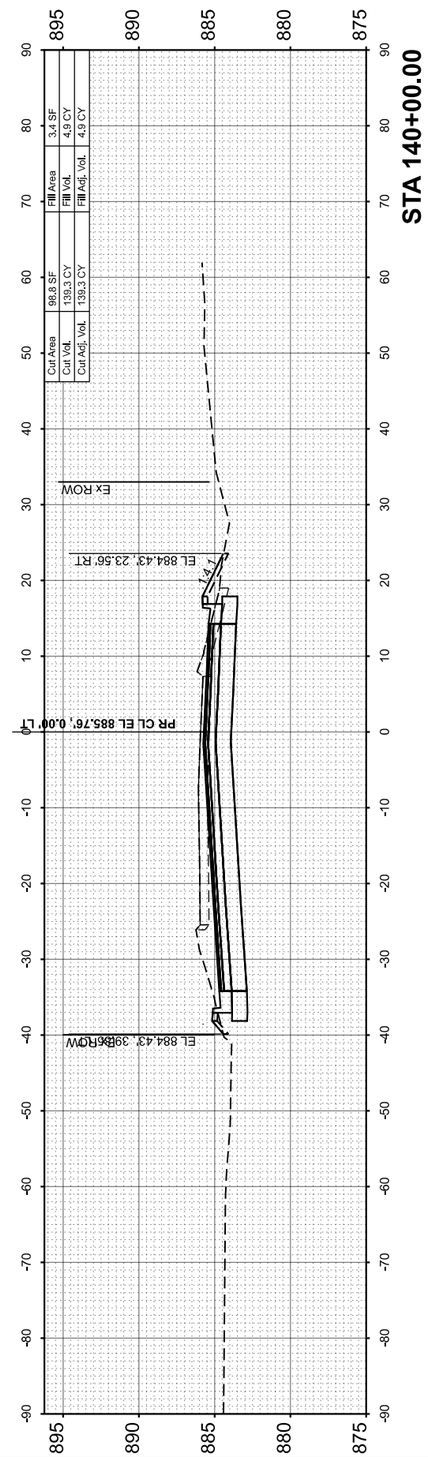

MODEL: PrCL-Besinger - 140+00.00 [Sheet]
FILE NAME: \\hrgreen.com\hrgData\2020\201569\CAD\Sheets\201569-sht-xs.dgn

HRGreen.com
Illinois Professional Design Firm
184-001322

USER NAME = jhorwitt	DESIGNED -	REVISED -	
	DRAWN - JCH	REVISED -	
PLOT SCALE = 0.16666633 ' / in.	CHECKED -	REVISED -	
PLOT DATE = 6/12/2025	DATE - 6/12/2025	REVISED -	

STATE OF ILLINOIS
DEPARTMENT OF TRANSPORTATION

CROSS SECTIONS
L.W. BESINGER DRIVE

SCALE: 1"=10' | SHEET 16 OF 16 SHEETS | STA. | TO STA.

F.A.U. RTE.	SECTION	COUNTY	TOTAL SHEETS	SHEET NO.
4006	22-00094-00-FP	KANE	105	105
		CONTRACT NO.	61L58	
		ILLINOIS	FED. AID PROJECT	