F.A.P. RTE.	SECTION	COUNTY	TOTAL SHEETS	SHEET NO.
335	119R-2	LAKE	439	278
STA. 432+83.12		TO STA. 470+56.84		
FED. ROAD DIST. NO.	ILLINOIS	FED. AID PROJECT		

60B01

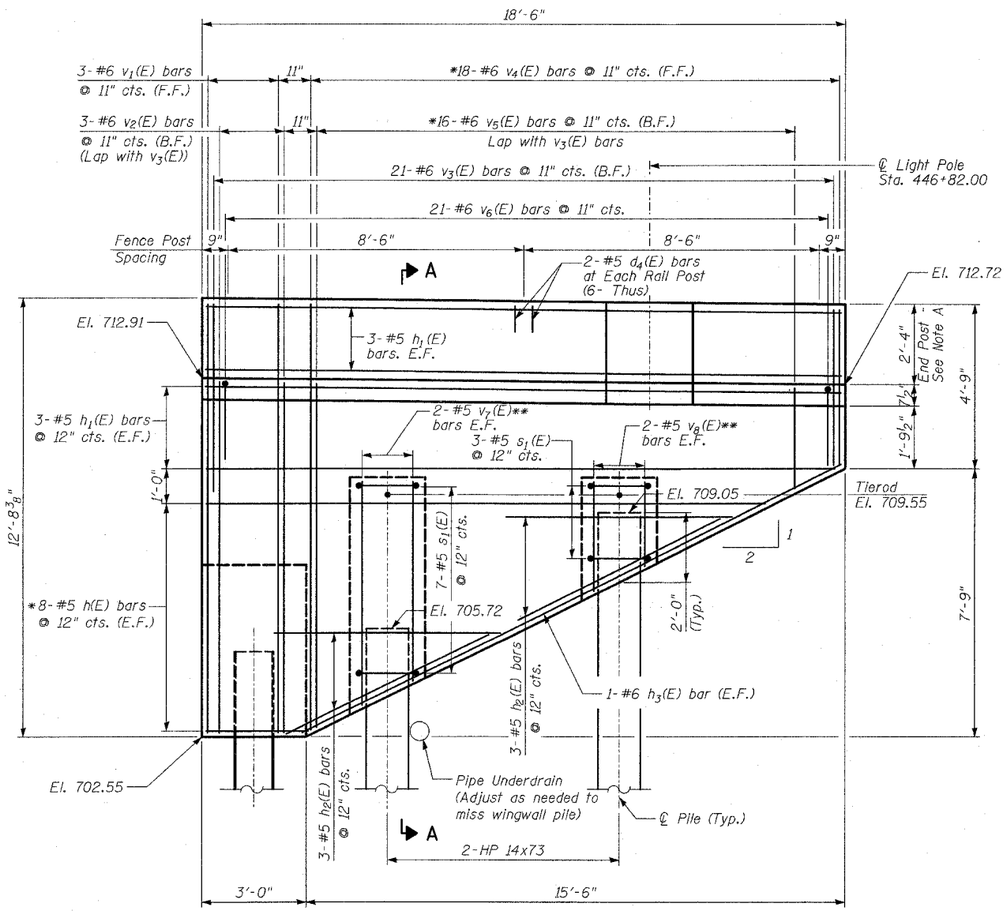

SOUTH WINGWALL ELEVATION

(Looking North)

*See Field Cutting Diagram
**Cut to Fit

Note A:
End Post shall be poured after Bridge Parapet is in place. Form top surface to match Parapet grade.

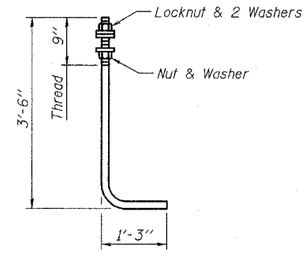

ANCHOR ROD

Diameter as specified for light poles. (ASTM F 1554 Grade 105)

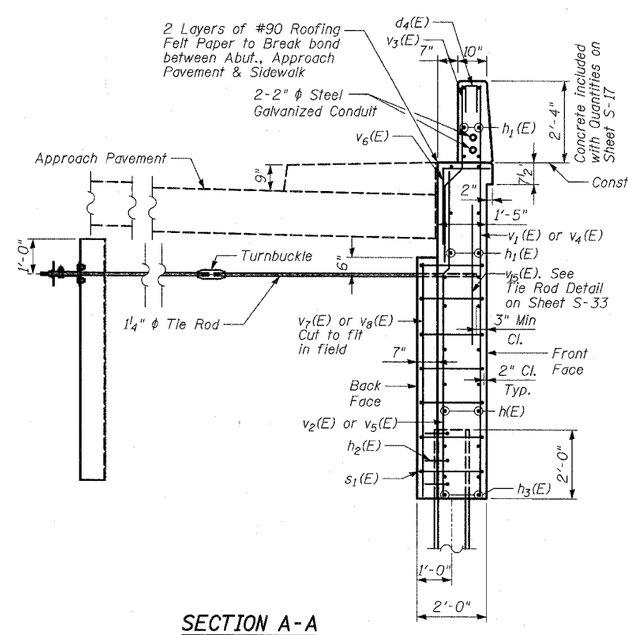

SECTION A-A

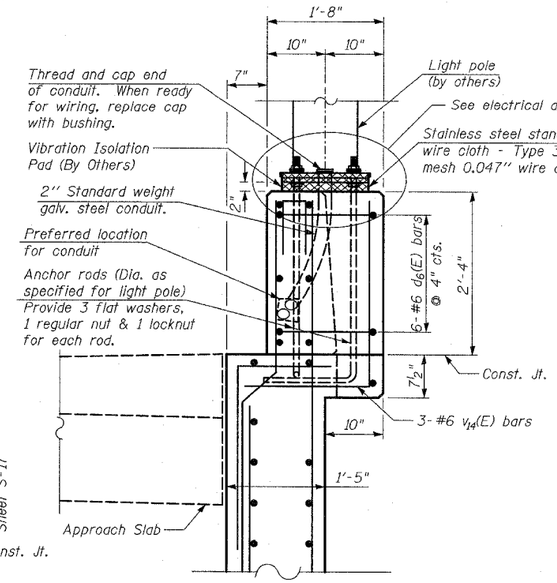

SECTION B-B

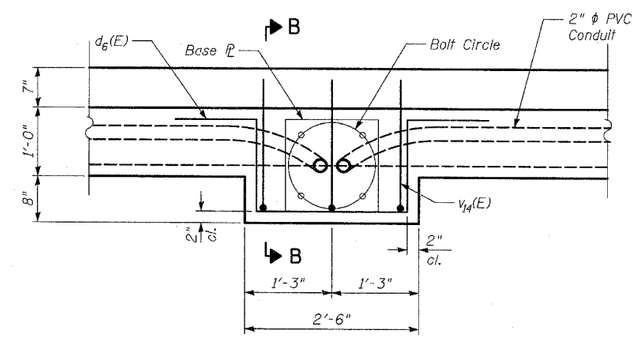

LIGHT POLE PLAN

LEGEND

E.F. - Denotes Each Face.

B.F. - Denotes Back Face.

F.F. - Denotes Front Face.

NOTES

1. Quantity of Concrete in End Post included with Concrete Superstructure on Sheet S-17.
2. For Details on Bar Splicers. See Sheet S-38.
3. For Details on Piles and Concrete Encasement. See Sheet S-39. Concrete Encasement shall be used on each Abutment and Wingwall Pile.

REVISIONS	
NAME	DATE

SHEET S-31 OF S-53

ILLINOIS DEPARTMENT OF TRANSPORTATION

EAST ABUTMENT DETAILS - I

ILLINOIS 60 OVER I-94

F.A.P. RTE. 335 SECTION 119R-2

LAKE COUNTY STA. 445+54.14

S.N. 049-2012 ISTHA BRIDGE NO. 407

SCALE:

DATE: MAY 8, 2007

DESIGNED BY: TB

DRAWN BY: TB

CHECKED BY: SP

TY·LIN INTERNATIONAL

p:\60245811-60\structur\Final\L60BPreabut2.DGN

05/03/2007 04:30:47 PM