F.A.P. RTE.	SECTION	COUNTY	TOTAL SHEETS	SHEET NO.
335	119R-2	LAKE	439	297
STA. 432+83.12		TO STA. 470+56.84		
FED. ROAD DIST. NO.	ILLINOIS	FED. AID PROJECT		

60B01

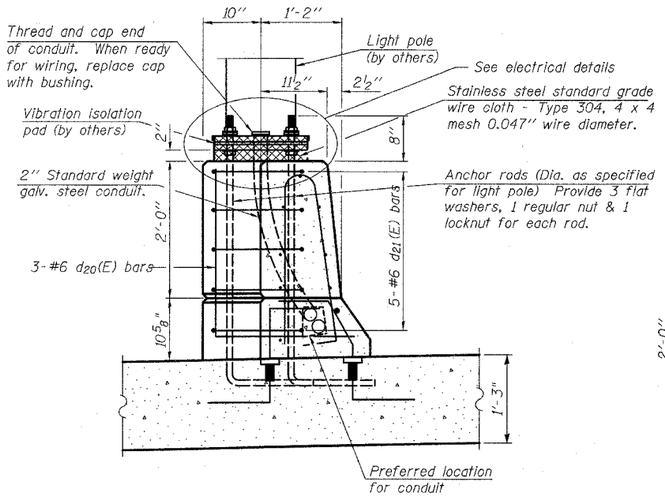

SECTION D-D

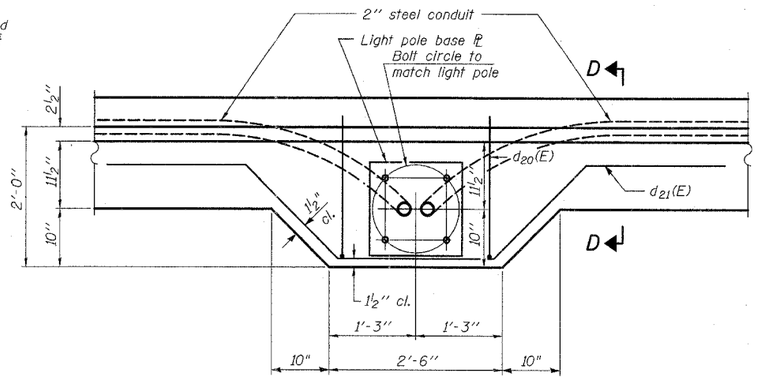

PLAN

Note:
Cost of anchor rods and conduit is included with Concrete Superstructure.

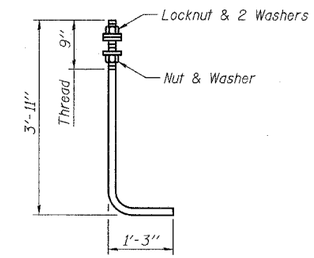

ANCHOR ROD

Diameter as specified for light poles.
(ASTM F 1554 Grade 105)

BILL OF MATERIAL

Bar	No.	Size	Length	Shape
$a_{20}(E)$	602	#9	29'-6"	
$a_{21}(E)$	326	#5	29'-6"	
$a_{22}(E)$	304	#4	6'-8"	
$a_{23}(E)$	304	#4	5'-8"	
$b_{20}(E)$	124	#5	30'-8"	
$b_{21}(E)$	36	#4	30'-6"	
$b_{22}(E)$	186	#5	31'-8"	
$b_{23}(E)$	54	#4	31'-6"	
$c(E)$	62	#5	2'-5"	
$c_{20}(E)$	62	#5	3'-5"	
$c_{21}(E)$	62	#5	2'-2"	
$c_{22}(E)$	62	#5	4'-8"	
$c_{23}(E)$	62	#5	3'-8"	
d_4 (E)	16	#4	2'-0"	
d_5 (E)	66	#5	5'-7"	
$d_{20}(E)$	6	#6	4'-5"	
$d_{21}(E)$	10	#6	10'-0"	
$e_{20}(E)$	2	#8	29'-6"	
$e_{21}(E)$	16	#4	29'-6"	
$h_{20}(E)$	96	#5	30'-10"	
$h_{21}(E)$	144	#5	31'-9"	
Protective Coat			SQ YD	1051
Bar Splicers			Each	218
* Reinforcement Bars, Epoxy Coated			Pound	94,876

* Provided for information only

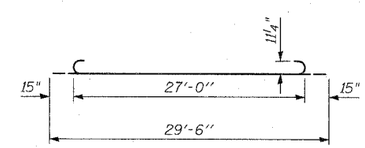

BAR $a_{20}(E)$

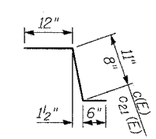

BAR $c(E)$ & $c_{21}(E)$

BAR $d_4(E)$

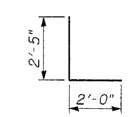

BAR $d_{20}(E)$

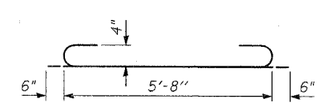

BAR $a_{22}(E)$

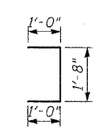

BAR $c_{23}(E)$

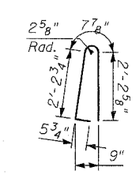

BAR $d_5(E)$

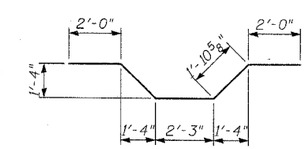

BAR $d_{21}(E)$

SHEET S-50 OF S-53

REVISIONS	
NAME	DATE

ILLINOIS DEPARTMENT OF TRANSPORTATION

APPROACH PAVEMENT DETAILS - II

ILLINOIS 60 OVER I-94

F.A.P. RTE. 335 SECTION 119R-2

LAKE COUNTY STA. 445+54.14

S.N. 049-2012 ISTHA BRIDGE NO. 407

DESIGNED BY: PL

SCALE: DRAWN BY: SNB

DATE: MAY 8, 2007 CHECKED BY: SP

TYLIN INTERNATIONAL

p:\60245811-60\structure\final\VL60BRapprdt2.DGN

05/03/2007 04:31:33 PM