F. A. U. RTE.	SECTION	COUNTY	TOTAL SHEETS	SHEET NO
	05-00021-00-LT	COOK	13	13
FED. ROAD DIST. NO. 1	ILLINOIS	FED. AID PROJECT HD-8003(535)		

CONTRACT NO. 83946

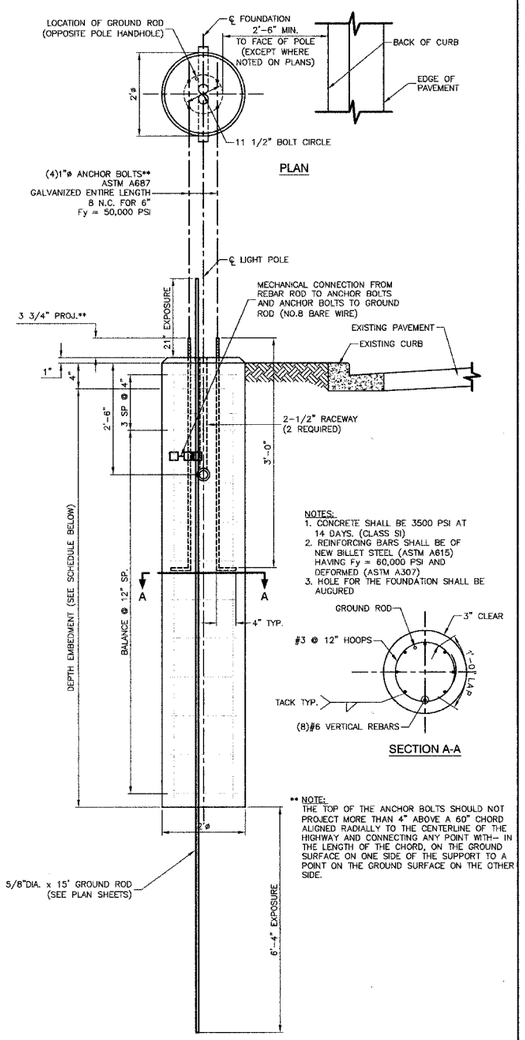

NOTES:
1. CONCRETE SHALL BE 3500 PSI AT 14 DAYS. (CLASS SI)
2. REINFORCING BARS SHALL BE OF NEW BILLET STEEL (ASTM A615) HAVING Fy = 60,000 PSI AND DEFORMED (ASTM A307)
3. HOLE FOR THE FOUNDATION SHALL BE AUGURED

LIGHT POLE FOUNDATION

FOUNDATION SCHEDULE

TYPE OF SOILS		EMBEDMENT
		MOUNTING HEIGHT
DESCRIPTION	STANDARDS	30 FT.
SOFT CLAY	Qu= .25-.50 T/FT.^{2}	9'-0"
MEDIUM CLAY	Qu= .50-1.0 T/FT.^{2}	6'-6"
DENSE CLAY	Qu= 1.0-2.0 T/FT.^{2}	5'-6"
LOOSE SAND	N= 4-10	7'-0"
MEDIUM SAND	N= 10-30	6'-6"
DENSE SAND	N= 30-50	5'-6"

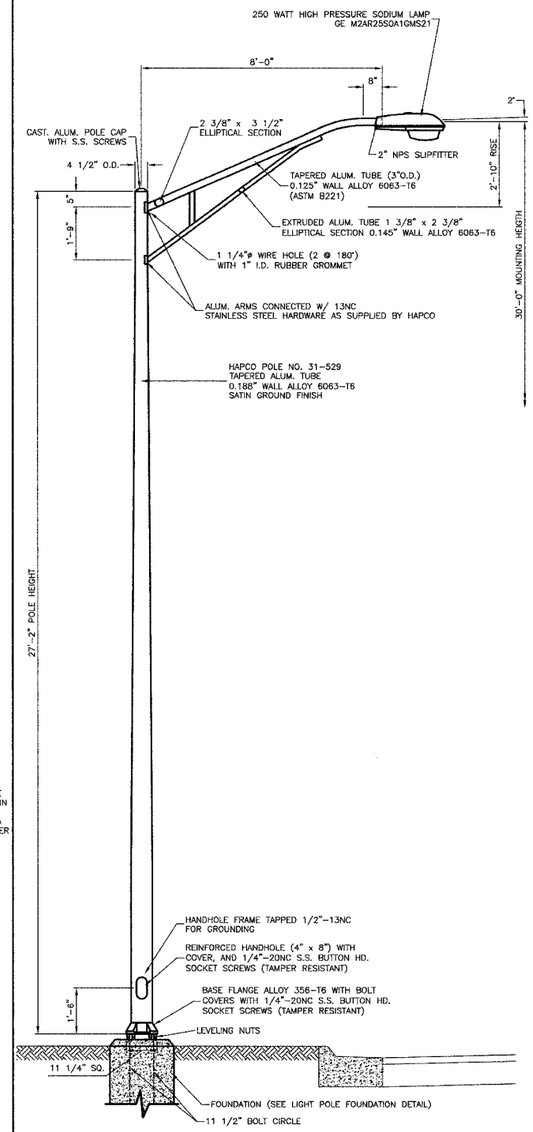

NOTE:
THE LIGHTING UNITS SHALL MEET AASHTO DESIGN CRITERIA. DESIGN FOR 90 M.P.H. WIND WITH 30% GUST AND 75 POUND LUMINAIRE HAVING AN E.P.A. OF 1.6 SQ. FT. AND PROPER ICE LOADING.

TYPICAL POLE INSTALLATION

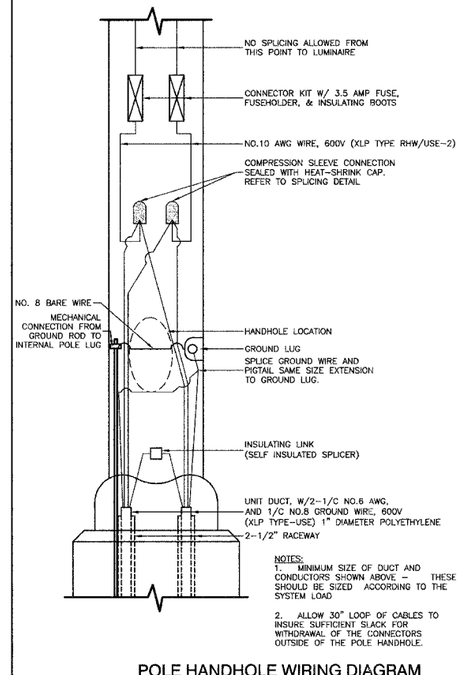

NOTES:
1. MINIMUM SIZE OF DUCT AND CONDUCTORS SHOWN ABOVE – THESE SHOULD BE SIZED ACCORDING TO THE SYSTEM LOAD
2. ALLOW 30" LOOP OF CABLES TO INSURE SUFFICIENT SLACK FOR WITHDRAWAL OF THE CONNECTORS OUTSIDE OF THE POLE HANDHOLE.

POLE HANDHOLE WIRING DIAGRAM

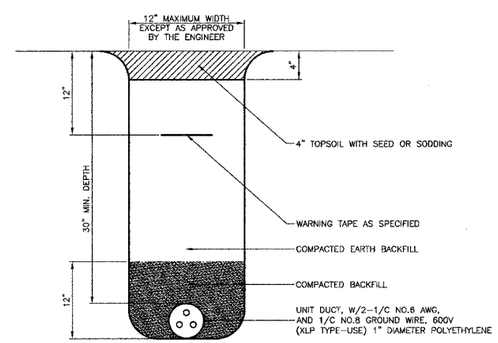

NOTE:
MINIMUM SIZE OF DUCT AND CONDUCTORS SHOWN ABOVE – THESE SHOULD BE SIZED ACCORDING TO THE SYSTEM LOAD

TYPICAL TRENCH DETAIL FOR ELECTRIC CABLE

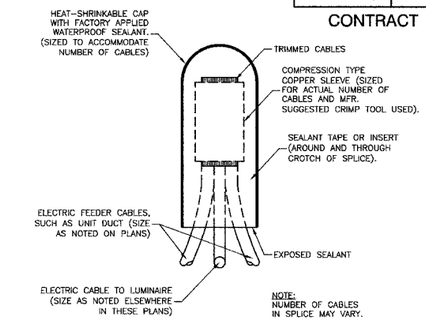

NOTE:
NUMBER OF CABLES IN SPLICE MAY VARY.

SPLICING DETAIL

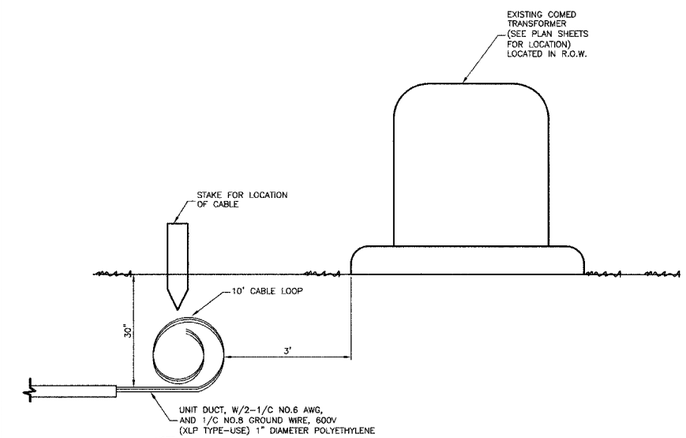

NOTE:
MINIMUM SIZE OF DUCT AND CONDUCTORS SHOWN ABOVE – THESE SHOULD BE SIZED ACCORDING TO THE SYSTEM LOAD

ELECTRIC UTILITY SERVICE CONNECTION

NOTES :

1. ALL WORK TO CONFORM TO THE NATIONAL ELECTRICAL CODE AND ANY APPLICABLE LOCAL CODES.
2. CONTRACTOR TO VERIFY LOCATION OF ALL UNDERGROUND UTILITIES BEFORE TRENCHING OR AUGERING.
3. BEFORE INSTALLING STANDARDS NEAR OVERHEAD FACILITIES CALL C.E. Co. FOR APPROVAL OF LOCATION.
4. FOR LOCATION OF EXISTING UNDERGROUND ELECTRICAL CABLE CALL C.E. Co.

ROBINSON ENGINEERING, LTD.
CONSULTING REGISTERED PROFESSIONAL ENGINEERS AND PROFESSIONAL LAND SURVEYORS
17000 SOUTH PARK AVENUE SOUTH HOLLAND, ILLINOIS 60473
(708) 331-6700 FAX (708) 331-3826

© COPYRIGHT 2007
ILLINOIS DESIGN FIRM REGISTRATION NO. 184001128.

BEACON STREET LIGHTING
MFT SECTION NO. 05-00021-00-LT
LIGHTING DETAILS

LYNWOOD, ILLINOIS

Drawn by:	RG	Date:	03/27/07
Checked by:	EJT	Scale:	NONE
Sheet	13 of 13	Project No.	05-488

REVISIONS		
No.	Date	Remarks