NOTE:

ALL BARS SHALL BE EPOXY COATED.

REINFORCING BAR SCHEDULE					
BAR	NO.	SIZE	LENGTH	WT. LBS.	SHAPE
a1(E)	12	#4	5'-0"	40	
b(E)	6	#4	4'-2"	17	
b1(E)	2	#4	5'-2"	7	
d1(E)	12	#4	5'-9"	46	
sp1(E)	*	#4	*		
v1(E)	8	#6	11'-9"	142	

* SEE SECT. A-A

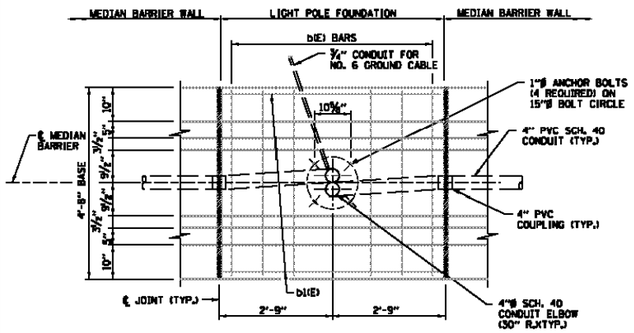

PLAN VIEW

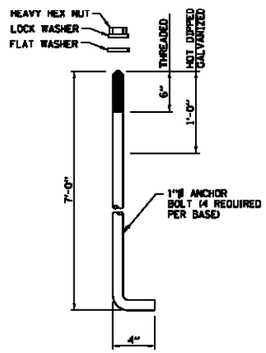

ANCHOR BOLT DETAIL

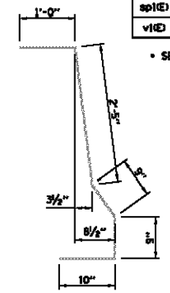

d1(E) BAR

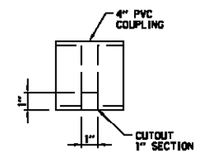

DETAIL A

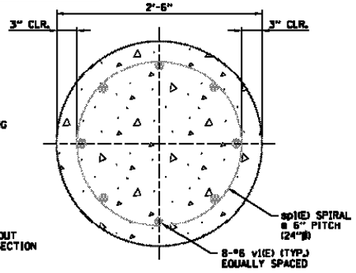

SECTION B-B

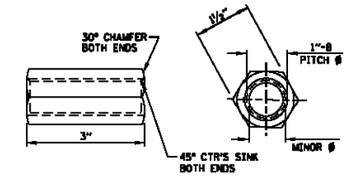

COUPLING NUT

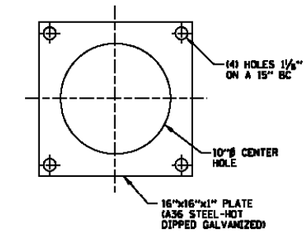

SETTING PLATE

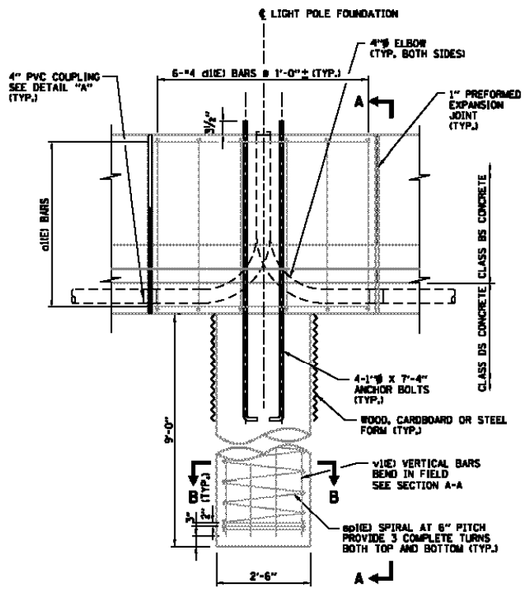

ELEVATION

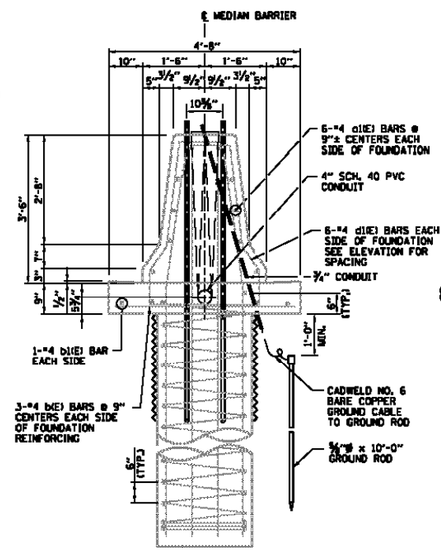

SECTION A-A

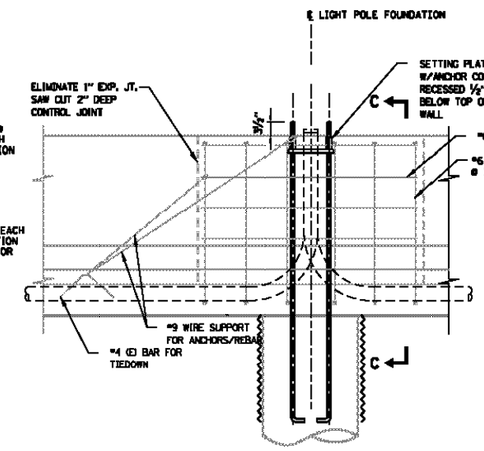

ELEVATION

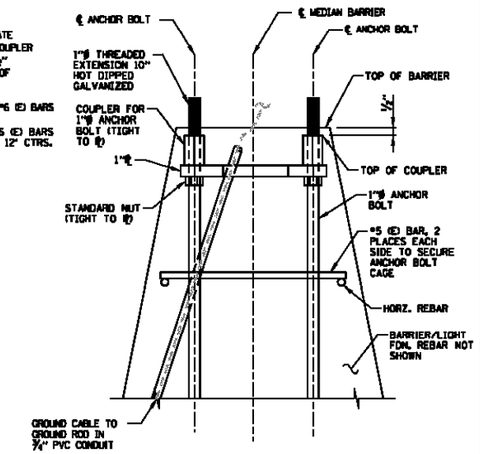

SECTION C-C

NOTE:

PLUG TOP OF COUPLER WITH PLASTIC PLUG OR COVER WHILE PLACING CONCRETE. PROTECT GROUND WIRE WHILE PLACING CONCRETE.

TYPE 1 CENTERED CAISSON, 42" BARRIER

MODIFIED LIGHT POLE FOUNDATION (SLIPFORM POUR)

Illinois Tollway — Open Roads for a Better Future

DATE	REVISIONS
2-7-2012	CHANGED ANCHOR BOLT DIMENSION, MODIFIED LIGHT POLE FOUNDATION, CHANGED FOUNDATION CONCRETE, MODIFIED REINFORCEMENT BARS

MEDIAN BARRIER LIGHT POLE FOUNDATION DETAILS

STANDARD H8-01

Paul Kovacs
APPROVED ..... CHIEF ENGINEER ..... DATE 2-7-2012

EJM ENGINEERING, INC.
411 South Wells Street Suite 1000
Chicago, Illinois 60607

s:\projects\3831 us 41-usc to il 173 - bbb\project work\disciplines\electrical\sheets\0168L77-sht-light-53a.dgn

E-53A

FILE NAME	USER NAME = rswanson	DESIGNED - RAS	REVISED -	STATE OF ILLINOIS DEPARTMENT OF TRANSPORTATION	TOLLWAY STANDARD DRAWINGS	F.A. RTE.	SECTION	COUNTY	TOTAL SHEETS	SHEET NO.
		DRAWN - BHH	REVISED -			94	49-1-R-1	LAKE	677	413A
	PLOT SCALE = NONE ' / IN.	CHECKED - MKR	REVISED -					CONTRACT NO. 60L77		
	PLOT DATE = 6/18/2012	DATE - 6/19/2012	REVISED -		SCALE: NONE / SHEET NO. 53A OF 53 SHEETS / STA. TO STA.			ILLINOIS FED. AID PROJECT		