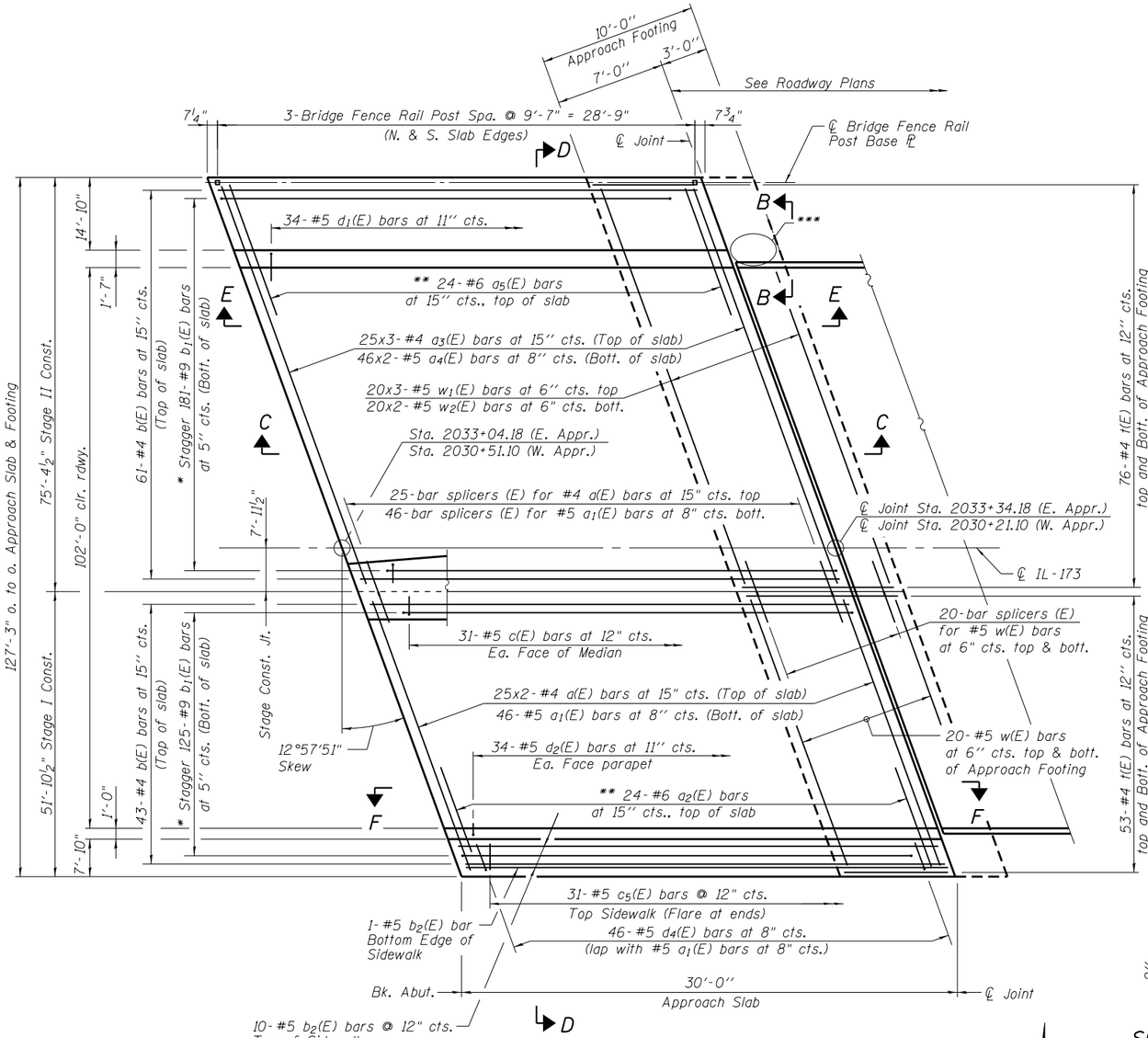

APPROACH SLAB PLAN

(East Approach Slab shown, West Approach sim. except as noted)

N

* Tilt #9 $b_1(E)$ bars as required to maintain clearance.
** Space between a(E) bars (S. Par.) or $a_3(E)$ bars (N. Par.).
*** Contractor to provide blockouts or cored holes through approach footing to accommodate guardrail posts. The void around each post shall be backfilled with earth or aggregate. Coordinate with Roadway Plans. Cost included with Steel Plate Beam Guardrail.

MINIMUM BAR LAP

#4 bar = 2'-7"
#5 bar = 3'-3"

*** Cost included with Concrete Superstructure.

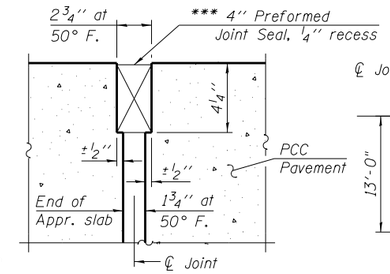

RIGID PAVEMENT

DETAIL A

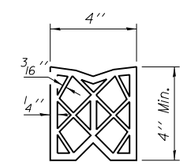

PREFORMED JOINT SEAL

Notes:
See sheet S-19 of S-36 for Sections C-C & D-D and Views E-E & F-F.
a(E) and $a_1(E)$ bar spacings measured along ℄ Rdwy.

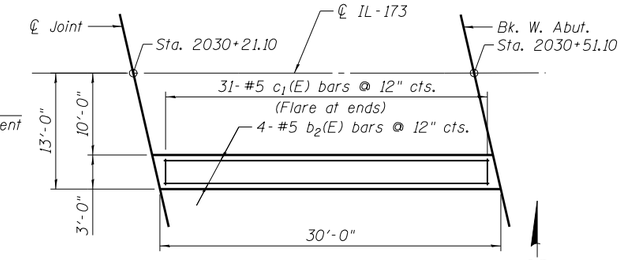

MEDIAN PLAN - W. APPROACH

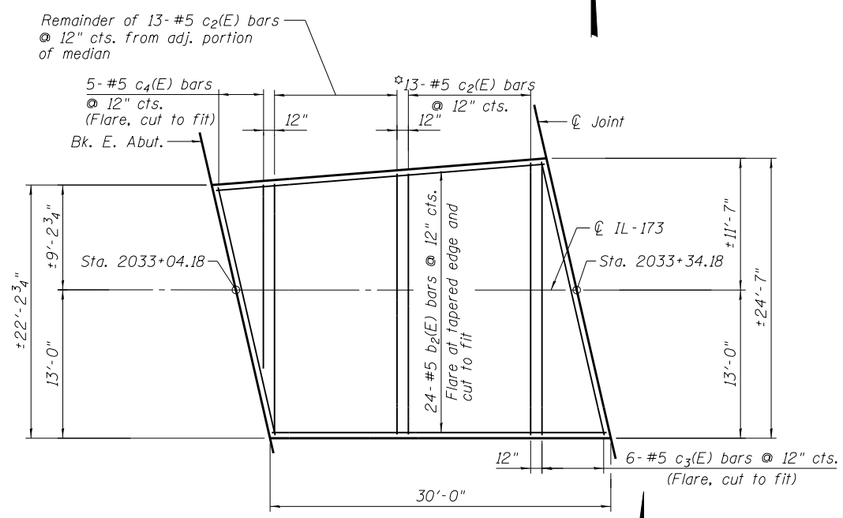

MEDIAN PLAN - E. APPROACH

* Cut bars according to diagram on Sheet S-19 and place remainder at adjacent portion of median

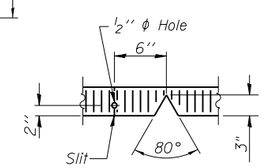

SEAL CUT-OUT AT MEDIAN

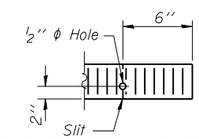

END OF SEAL CUT-OUT

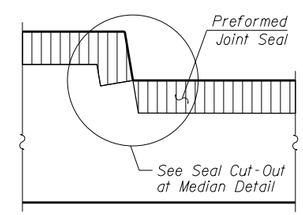

AT MEDIAN

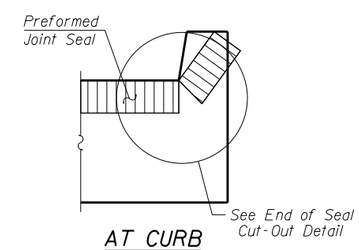

AT CURB

Angle Preformed Joint Seal at 45° at curbs when req'd for drainage.

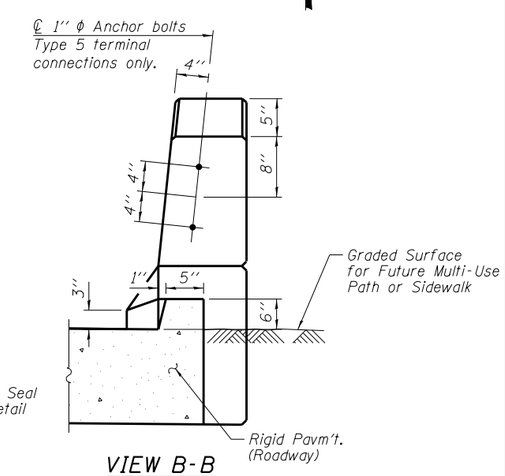

VIEW B-B

(N. Parapet shown, S. Parapet, sim.)

PREFORMED JOINT SEAL DETAILS

BOWMAN, BARRETT & ASSOCIATES INC.
CONSULTING ENGINEERS
Chicago, Illinois
312.228.0100
www.bbandainc.com

USER NAME =	DESIGNED - MRM	DATE - 6/19/2012	
	CHECKED - TL	REVISED -	
PLOT SCALE =	DRAWN - MTR	REVISED -	
PLOT DATE =	CHECKED - MRM	REVISED -	

STATE OF ILLINOIS
DEPARTMENT OF TRANSPORTATION

BRIDGE APPROACH SLAB PLAN
STRUCTURE NO. 049-0535 (BRIDGE NO. 441)
SHEET NO. S-18 OF S-36 SHEETS

F.A.I. RTE.	SECTION	COUNTY	TOTAL SHEETS	SHEET NO.
94	49-1-R-1	LAKE	677	456
		CONTRACT NO. 60L77		
		ILLINOIS FED. AID PROJECT		

S:\101\05_CADD\60L77 IL 173\60L77 Sheets\0490535-60L77-018-ASP.dgn
6/19/2012 11:01:52 AM