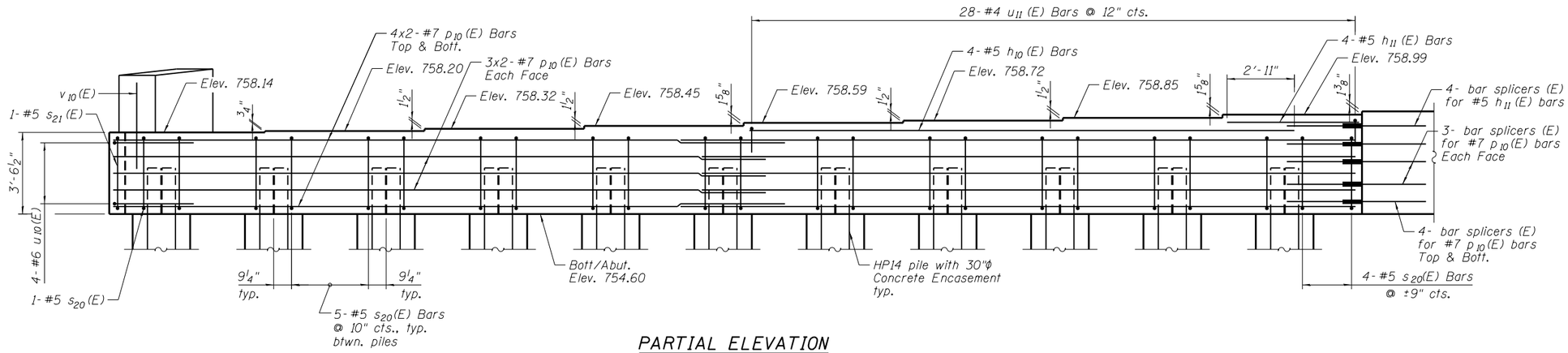

PARTIAL ELEVATION

(Looking West)

MIN. BAR LAP

#4 - 2'-4"
#5 - 2'-11"
#6 - 3'-6"
#7 - 4'-8"

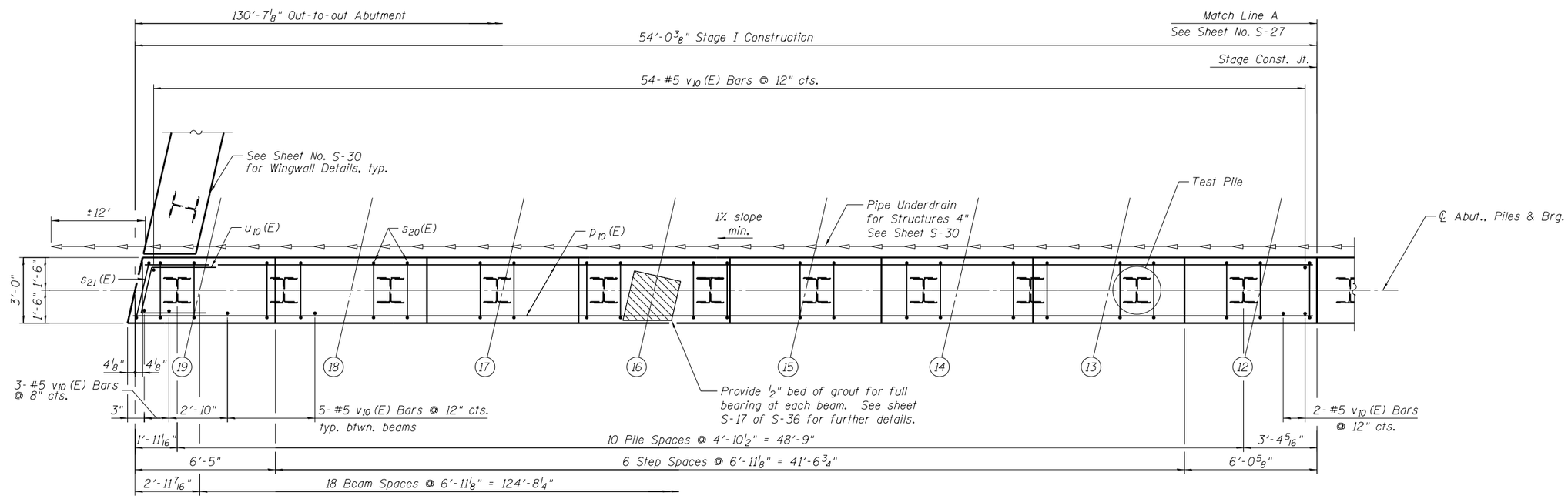

PILE DATA

Type: Steel-HP14x73
Nominal Required Bearing: 406 Kips
Factored Resistance Available: 216 Kips
Est. Length: 66'
No. Production Piles: 26
No. Test Piles: 1

Note: Pour steps monolithically with cap.

PARTIAL PLAN

N

6/19/2012 11:01:56 AM

S:\IDOT\05_CADD\60L77 IL 173\60L77 Sheets\0490535-60L77-026-WABI.dgn

BOWMAN, BARRETT & ASSOCIATES INC.
CONSULTING ENGINEERS
Chicago, Illinois
312.228.0100
www.bbandainc.com

USER NAME =	DESIGNED - MRM	DATE - 6/19/2012	
	CHECKED - TL	REVISED -	
PLOT SCALE =	DRAWN - MTR	REVISED -	
PLOT DATE =	CHECKED - MRM	REVISED -	

STATE OF ILLINOIS
DEPARTMENT OF TRANSPORTATION

WEST ABUTMENT I
STRUCTURE NO. 049-0535 (BRIDGE NO. 441)

SHEET NO. S-26 OF S-36 SHEETS

F.A.I. RTE.	SECTION	COUNTY	TOTAL SHEETS	SHEET NO.
94	49-1-R-1	LAKE	677	464
		CONTRACT NO. 60L77		
		ILLINOIS FED. AID PROJECT		