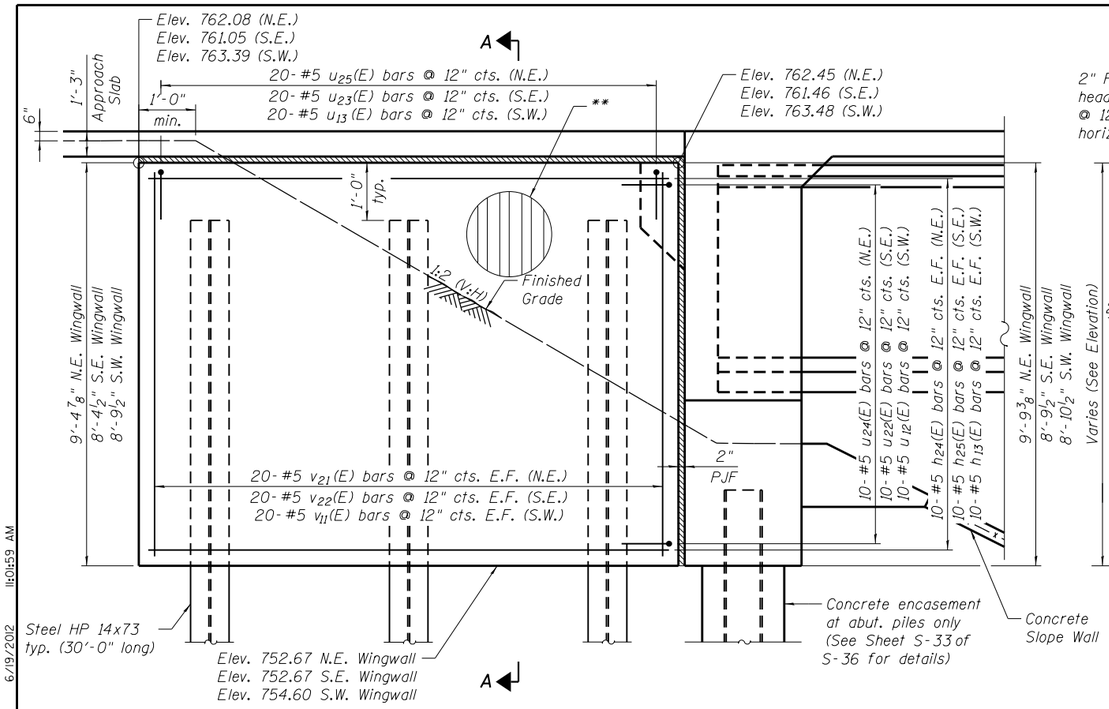

ELEVATION - WINGWALL

(S.W. wingwall shown, N.E. & S.E. similar)
Sidewalk and railing not shown for clarity.

** Provide Rustication finish at Northeast Wingwall. See Sheet S-2 of S-36 for Rustication Details. Cost included with Concrete Structures.

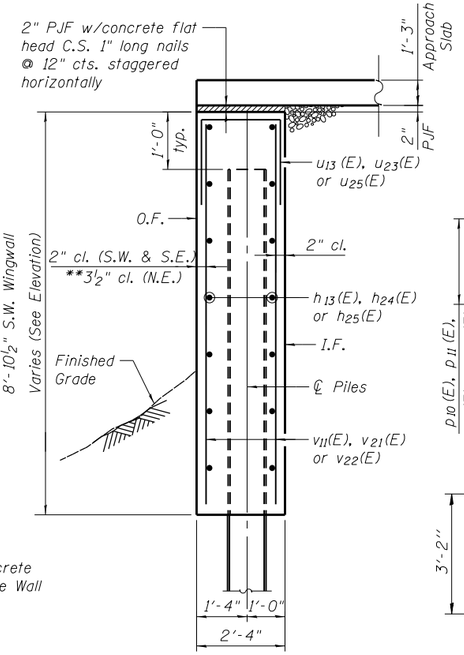

SECTION A-A

Sidewalk and railing not shown for clarity.

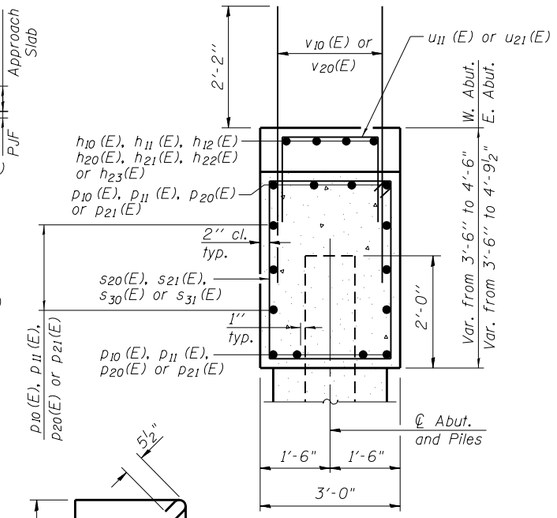

SEC. THRU ABUT.

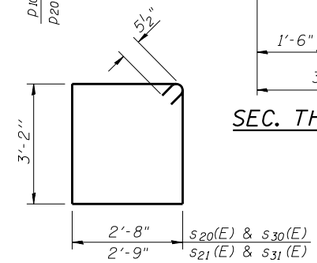

BARS s20(E), s21(E), s30(E) & s31 (E)

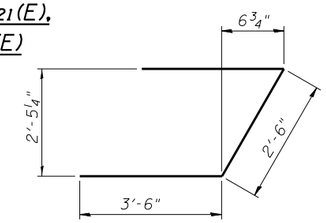

BARS u10(E) & u20(E)

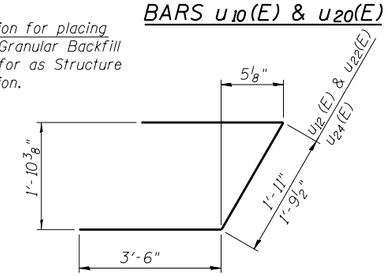

BARS u12(E), u22(E) & u24(E)

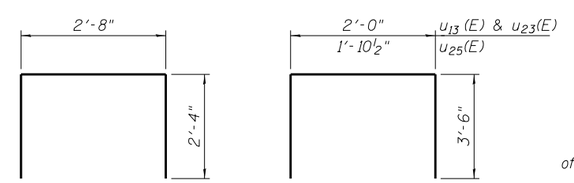

BARS u11 (E) & u21(E)

BARS u13(E), u23(E) & u25(E)

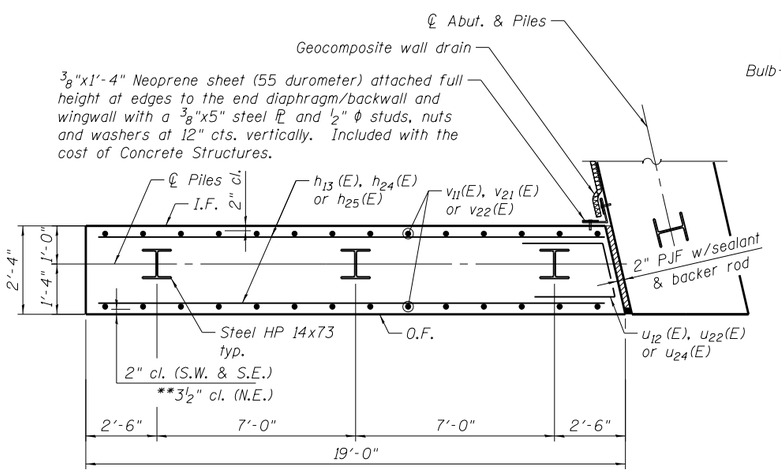

PLAN - WINGWALL

(S.W. wingwall shown, N.E. & S.E. similar)

N

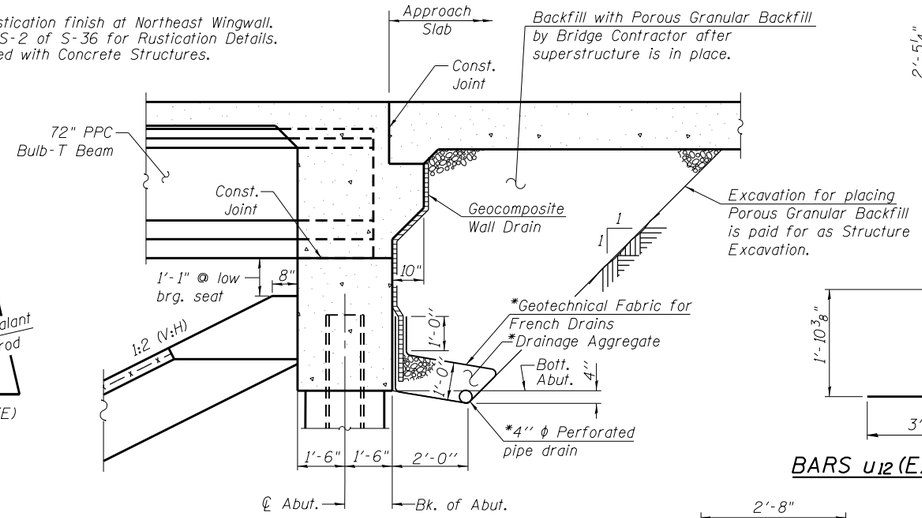

SECTION THRU INTEGRAL ABUTMENT

(Horiz. dim. @ Rt. L's)

*Included in the cost of Pipe Underdrains for Structures.

Note:
All drainage system components shall extend to 2'-0" from the end of each wingwall except an outlet pipe shall extend until intersecting with the side slopes. The pipes shall drain into concrete headwalls. (See Article 601.05 of the Standard Specifications and Highway Standard 601101).

W. ABUT. BILL OF MATERIAL

Bar	No.	Size	Length	Shape
h10(E)	8	#5	23'-9"	
h11 (E)	4	#5	5'-8""	
h12(E)	4	#5	21'-3"	
h13(E)	20	#5	18'-2"	
p10(E)	28	#7	29'-4"	
p11 (E)	28	#7	40'-8"	
s20(E)	133	#5	12'-7"	
s21(E)	2	#5	12'-9"	
u10(E)	8	#6	9'-6"	
u11(E)	71	#4	7'-4"	
u12(E)	10	#5	8'-11"	
u13(E)	20	#5	9'-0"	
v10 (E)	228	#5	4'-4''	
v11 (E)	40	#5	8'-4"	
Structure Excavation			Cu. Yd.	129
Concrete Structures			Cu. Yd.	72.1
Reinforcement Bars, Epoxy Coated			Pound	8,590
Furnishing Steel Piles HP14X73			Foot	1,806
Driving Piles			Foot	1,806
Test Pile HP14x73			Each	1
Concrete Encasement			Cu. Yd.	14.8
Porous Granular Backfill			Cu. Yd.	316
Geocomposite Wall Drain			Sq. Yd.	140
Pipe Underdrain for Structures, 4"			Foot	142

E. ABUT. BILL OF MATERIAL

Bar	No.	Size	Length	Shape
h20(E)	4	#5	23'-9"	
h21(E)	4	#5	14'-4"	
h22(E)	4	#5	5'-8"	
h23(E)	8	#5	16'-10"	
h24(E)	20	#5	18'-2"	
h25(E)	20	#5	18'-8"	
p20(E)	28	#7	29'-4"	
p21(E)	28	#7	40'-8"	
s30(E)	133	#5	12'-7"	
s31 (E)	2	#5	12'-9"	
u20(E)	8	#6	9'-6"	
u21(E)	71	#4	7'-4"	
u22(E)	10	#5	8'-11"	
u23(E)	20	#5	9'-0"	
u24(E)	10	#5	8'-10"	
u25(E)	20	#5	8'-11"	
v20(E)	228	#5	4'-4''	
v21 (E)	40	#5	9'-0"	
v22(E)	40	#5	8'-0"	
Structure Excavation			Cu. Yd.	169
Concrete Structures			Cu. Yd.	91.8
Reinforcement Bars, Epoxy Coated			Pound	9,640
Furnishing Steel Piles HP14X73			Foot	1,896
Driving Piles			Foot	1,896
Test Pile HP14x73			Each	1
Concrete Encasement			Cu. Yd.	14.8
Porous Granular Backfill			Cu. Yd.	322
Geocomposite Wall Drain			Sq. Yd.	140
Pipe Underdrain for Structures, 4"			Foot	145

For details of Bar Splicers, see sheet S-34 of S-36.
For details of piles and Concrete Encasement, see sheet S-33 of S-36.
Bars indicates thus 4x2-#7 etc. indicates 4 lines of bars with 2 lengths per line.

BOWMAN, BARRETT & ASSOCIATES INC.
CONSULTING ENGINEERS
Chicago, Illinois
312.228.0100
www.bbandainc.com

USER NAME =	DESIGNED - MRM	DATE - 6/19/2012	
	CHECKED - TL	REVISED -	
PLOT SCALE =	DRAWN - MTR	REVISED -	
PLOT DATE =	CHECKED - MRM	REVISED -	

STATE OF ILLINOIS
DEPARTMENT OF TRANSPORTATION

ABUTMENT DETAILS
STRUCTURE NO. 049-0535 (BRIDGE NO. 441)
SHEET NO. S-30 OF S-36 SHEETS

F.A.I. RTE.	SECTION	COUNTY	TOTAL SHEETS	SHEET NO.
94	49-1-R-1	LAKE	677	468

CONTRACT NO. 60L77
ILLINOIS FED. AID PROJECT

S:\1101\05_CADD\60L77 IL 173\60L77 Sheets\0490535-60L77-030-ABD.dgn
6/19/2012 11:01:59 AM