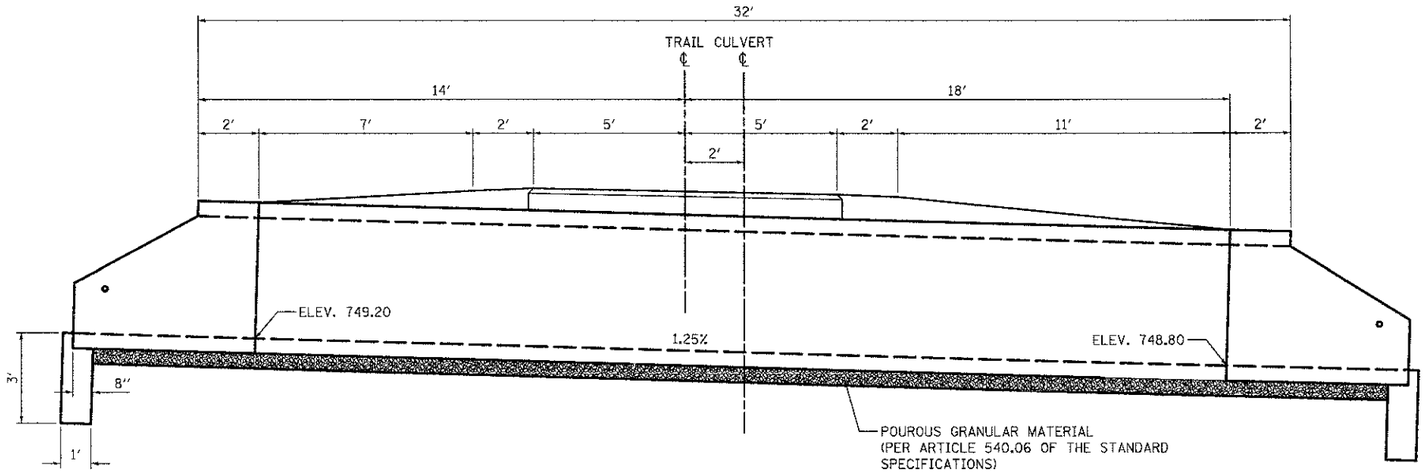

ELEVATION

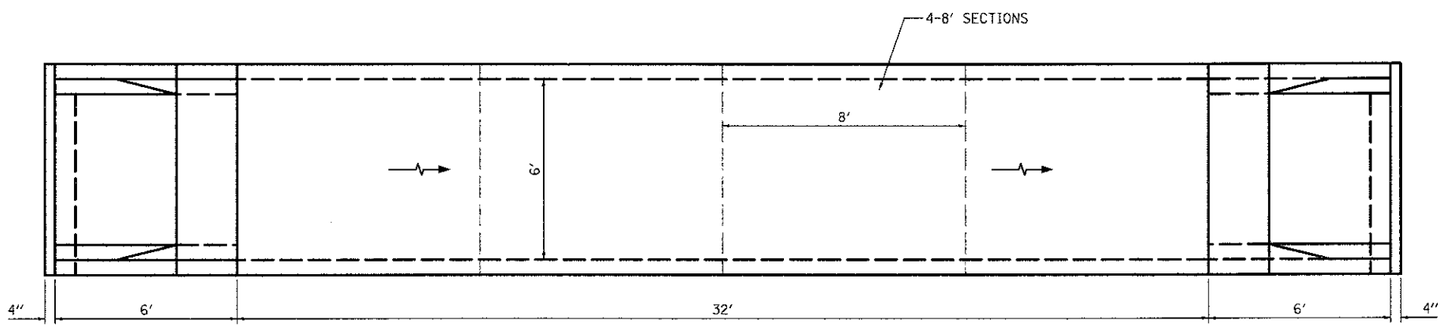

PLAN

BILL OF MATERIAL

ITEM	UNIT	TOTAL
PRECAST CONCRETE BOX CULVERTS	FOOT	32
BOX CULVERT END SECTIONS	EACH	2

GENERAL NOTES

1. BOX CULVERT AND END SECTIONS SHOULD CONFORM TO THE REQUIREMENTS OF ARTICLE 540.06 OF THE STANDARD SPECIFICATIONS AND THE APPLICABLE REQUIREMENTS OF ASTM C 1577.
2. THE MINIMUM CONCRETE STRENGTH SHALL BE ACCORDING TO ASTM C 1577.
3. REINFORCEMENT BARS SHALL CONFORM TO THE REQUIREMENTS OF ASTM C 1577.
4. ALL CONSTRUCTION JOINTS SHALL BE BONDED ACCORDING TO ARTICLE 503.09 OF THE STANDARD SPECIFICATIONS.
5. THE 6" POUROUS GRANULAR MATERIAL REQUIRED PER ARTICLE 540.06 OF THE STANDARD SPECIFICATIONS SHALL ALSO EXTEND BENEATH THE BOX CULVERT END SECTIONS AND SHALL BE CONSIDERED INCLUDED IN THE COST OF PRECAST CONCRETE BOX CULVERTS AND BOX CULVERT END SECTIONS.
6. THE JOINTS BETWEEN PRECAST BOX SECTIONS SHALL BE SEALED AND ALL VOIDS, INLUDING LIFTING HOLES WITH CONCRETE PLUGS, FILLED WITH A MASTIC JOINT SEALER. IN ADDITION, THE JOINTS SHALL BE EXTERNALLY SEALED ON ALL FOUR SIDES WITH A 13 INCH WIDE EXTERNAL SEALING BOND. THE SEAL SHALL BE CENTERED OVER THE JOINT, SECURED IN PLACE AND PROTECTED DURING THE BACKFILLING PROCESS.

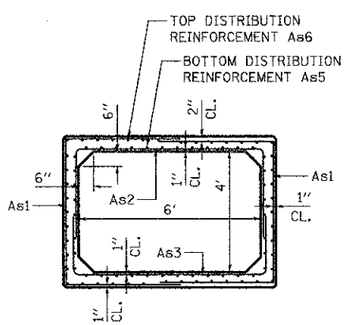

CROSS SECTION

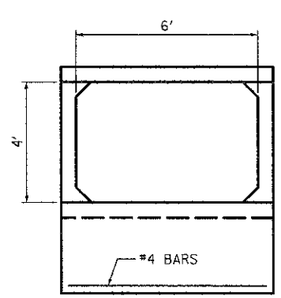

END VIEW

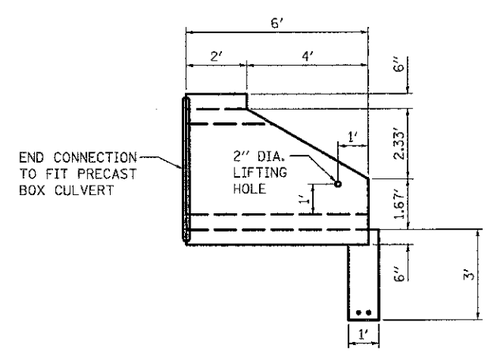

ELEVATION

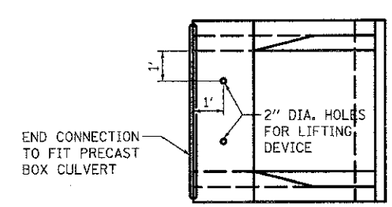

PLAN

FILE NAME = W:\Projects\2010\10009\ SouthSPEII\cadd\Civil\Dgn\Shs\DETAILS_CULVERT.dgn

WILLS BURKE KELSEY ASSOCIATES LTD.
116 West Main Street, Suite 201
St. Charles, Illinois 60174

USER NAME = nparris	DESIGNED - DPB	REVISED -	
	DRAWN - NDP	REVISED -	
PLOT SCALE = AS SHOWN	CHECKED - DPB	REVISED -	
PLOT DATE = 5/11/2012	DATE - 5/14/12	REVISED -	

STATE OF ILLINOIS
DEPARTMENT OF TRANSPORTATION

BOX CULVERT DETAIL

SCALE: AS SHOWN | SHEET NO. 53 OF 79 SHEETS | STA. | TO STA.

F.A.P. RTE.	SECTION	COUNTY	TOTAL SHEETS	SHEET NO.
0336	00-00259-00-BT	KANE	79	53
		CONTRACT NO.63667		

FED. ROAD DIST. NO. | ILLINOIS | FED. AID PROJECT