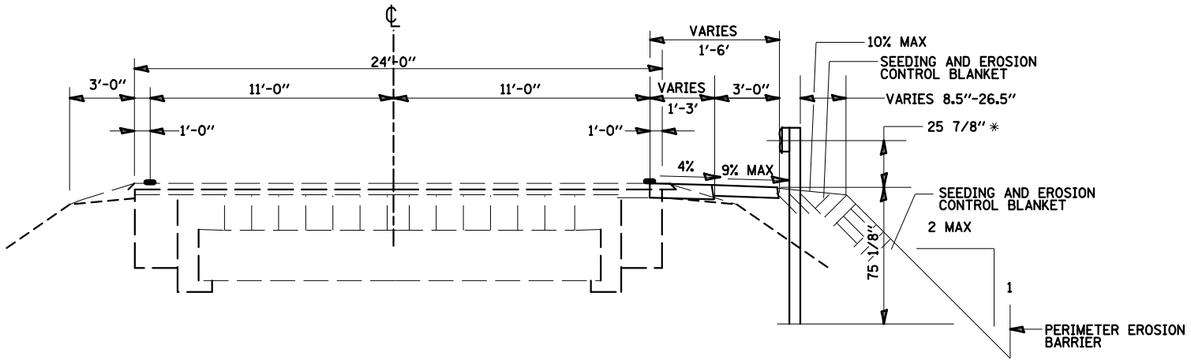

TYPICAL SECTION

LOCATION 5 - RT. STA. 176+54.00 TO 182+09.50

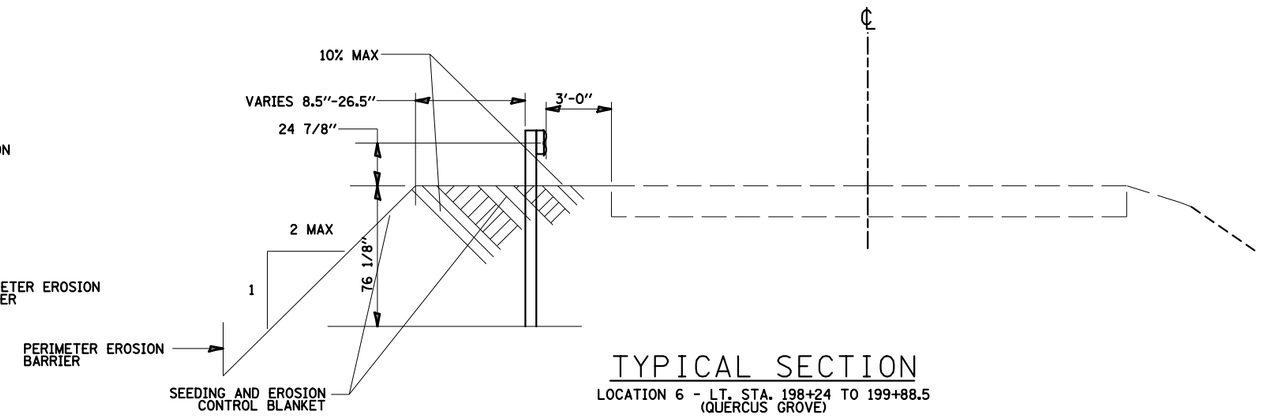

TYPICAL SECTION

LOCATION 6 - LT. STA. 198+24 TO 199+88.5
(QUERCUS GROVE)

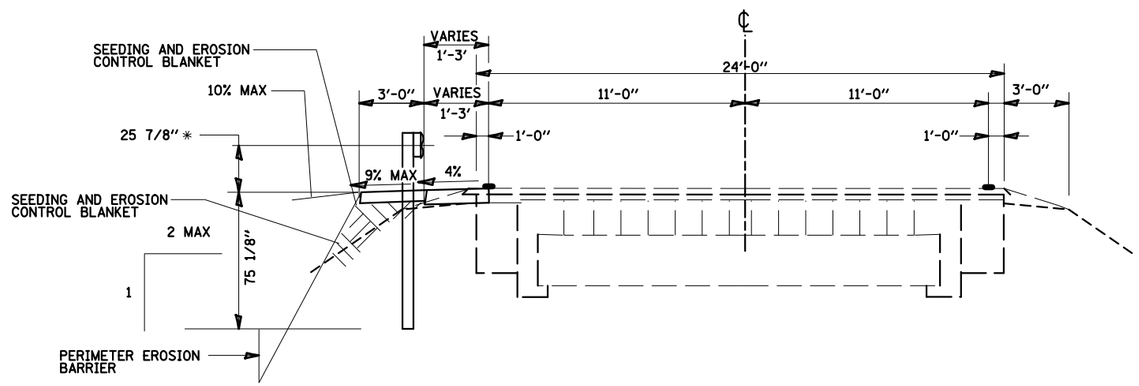

TYPICAL SECTION

LOCATION 5 - LT. STA. 176+86.50 TO 183+79.50

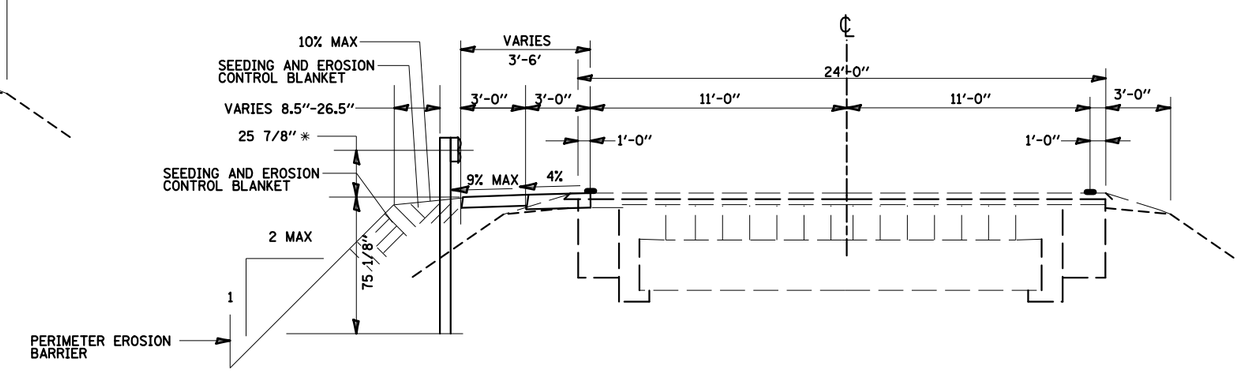

TYPICAL SECTION

LOCATION 11 - LT. STA. 374+63.63 TO 378+41.38

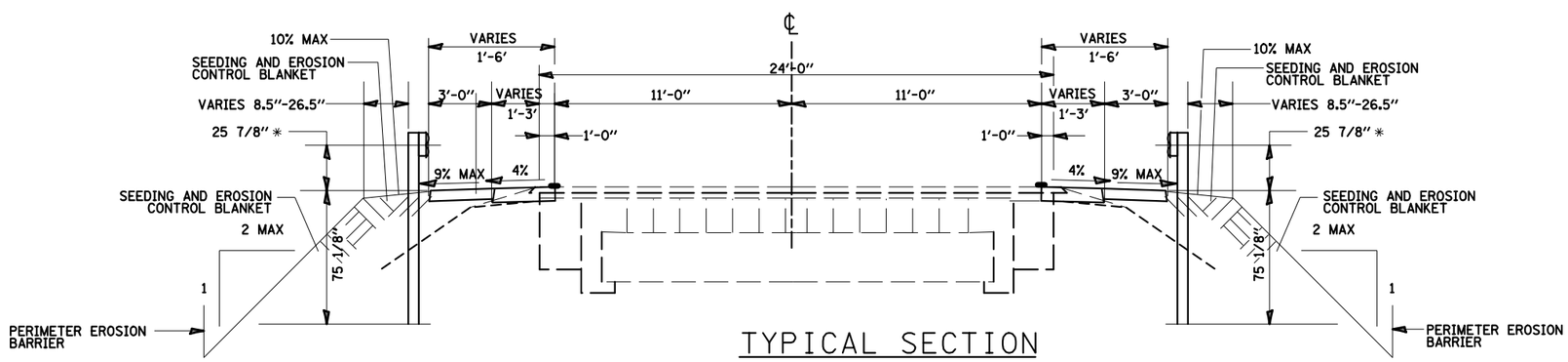

TYPICAL SECTION

LOCATION 8 - RT. STA. 314+66.63 TO STA. 320+15.88
LOCATION 8 - LT. STA. 315+66.63 TO STA. 319+90.88
LOCATION 10 - RT. STA. 354+22.25 TO STA. 359+52.75
LOCATION 10 - LT. STA. 354+97.25 TO STA. 360+77.75

FILE NAME = c:\pw_work\pwidot\childsl\d0279782\d876018-sht-plan.dgn	USER NAME = childsl	DESIGNED -	REVISED -	STATE OF ILLINOIS DEPARTMENT OF TRANSPORTATION	EROSION AND SEDIMENT CONTROL DETAILS	F.A.S. RTE.	SECTION	COUNTY	TOTAL SHEETS	SHEET NO.
		DRAWN -	REVISED -			770	GUARDRAIL REPLACEMENT		15	15
	PLOT SCALE = 100.0000 ' / in.	CHECKED -	REVISED -			F.A.U.		CONTRACT NO.		
	PLOT DATE = 3/22/2012	DATE -	REVISED -		SCALE: SHEET NO. 2 OF 2 SHEETS STA. TO STA.	8890	ILLINOIS FED. AID PROJECT			