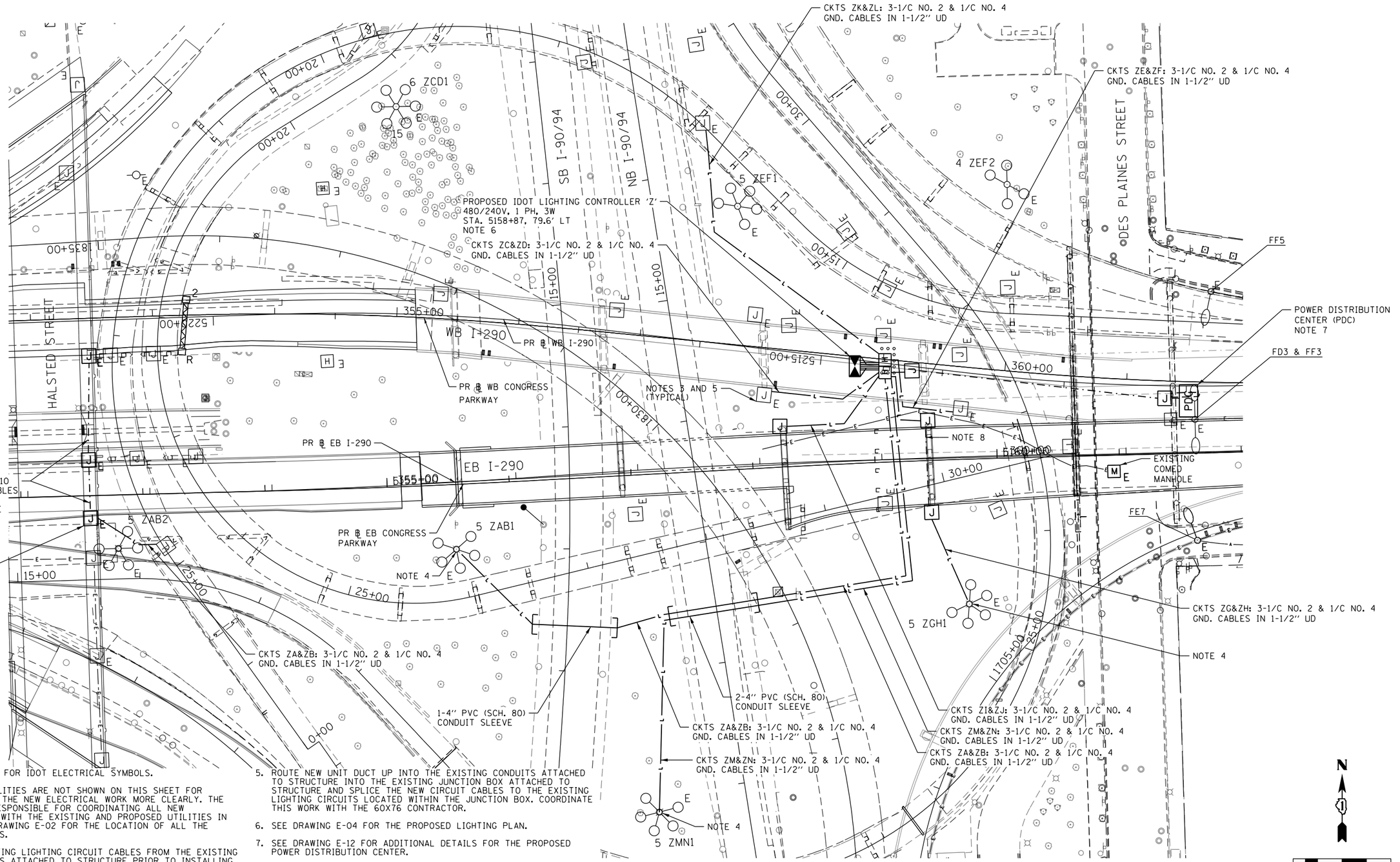

E-06

NOTES:

1. SEE DRAWING E-01 FOR IDOT ELECTRICAL SYMBOLS.
2. THE EXISTING UTILITIES ARE NOT SHOWN ON THIS SHEET FOR CLARITY TO SHOW THE NEW ELECTRICAL WORK MORE CLEARLY. THE CONTRACTOR IS RESPONSIBLE FOR COORDINATING ALL NEW ELECTRICAL WORK WITH THE EXISTING AND PROPOSED UTILITIES IN THIS AREA. SEE DRAWING E-02 FOR THE LOCATION OF ALL THE EXISTING UTILITIES.
3. REMOVE THE EXISTING LIGHTING CIRCUIT CABLES FROM THE EXISTING VERTICAL CONDUITS ATTACHED TO STRUCTURE PRIOR TO INSTALLING THE NEW CABLES.
4. ROUTE NEW UNIT DUCT INTO EXISTING LIGHT TOWER THROUGH THE EXISTING CONDUIT SLEEVE IN THE CONCRETE FOUNDATION AND CONNECT THE NEW LIGHTING CIRCUIT CABLES TO LIGHT TOWER LIGHTING CABLES.
5. ROUTE NEW UNIT DUCT UP INTO THE EXISTING CONDUITS ATTACHED TO STRUCTURE INTO THE EXISTING JUNCTION BOX ATTACHED TO STRUCTURE AND SPLICE THE NEW CIRCUIT CABLES TO THE EXISTING LIGHTING CIRCUITS LOCATED WITHIN THE JUNCTION BOX. COORDINATE THIS WORK WITH THE 60X76 CONTRACTOR.
6. SEE DRAWING E-04 FOR THE PROPOSED LIGHTING PLAN.
7. SEE DRAWING E-12 FOR ADDITIONAL DETAILS FOR THE PROPOSED POWER DISTRIBUTION CENTER.
8. SEE DRAWING E-07 FOR THE UNDERPASS LIGHTING PLAN WHICH PROVIDES ADDITIONAL INFORMATION ON THE LIGHTING FEED FOR CIRCUITS ZG AND ZH ACROSS PIER 3.
9. PROVIDE TERMINAL BLOCKS AND 30A FUSES IN THE JUNCTION BOX FOR SPLICING THE NO. 10 UNDERPASS LIGHTING WIRES TO THE NO. 2 LIGHTING CIRCUIT WIRES. COORDINATE THIS WORK WITH THE 60X76 CONTRACTOR.
10. DRILL THE EXISTING JUNCTION BOXES AND ROUTE NEW CONDUIT ACROSS THE BRIDGE. ROUTE THE NEW LIGHTING CIRCUIT CABLES INTO THE JUNCTION BOX AND SPLICE THE NEW CIRCUIT CABLES TO THE EXISTING LIGHTING CIRCUITS LOCATED WITHIN THE JUNCTION BOX.

AECOM
303 EAST WACKER DRIVE, SUITE 1400
CHICAGO, IL 60601-5276
PHONE: (312) 373-7700 FAX: (312) 373-6800

D160X75-SHT-Light-06	DESIGNED - PFD	REVISED -
USER NAME = myersc	DRAWN - CAM	REVISED -
PLOT SCALE = 80.0000 ' / in.	CHECKED - WDS	REVISED -
PLOT DATE = 5/3/2017	DATE - 5/10/2017	REVISED -

STATE OF ILLINOIS
DEPARTMENT OF TRANSPORTATION

PROPOSED LIGHTING PLAN
EXISTING LIGHTING CIRCUIT CONNECTIONS TO NEW CONTROLLER Z
EB I-290 OVER I-90/94 AND EB CONGRESS PARKWAY

SCALE: 1"=40' | SHEET 6 OF 17 SHEETS | STA. 5150+00 TO STA. 5162+00

F.A.I. RTE.	SECTION	COUNTY	TOTAL SHEETS	SHEET NO.
90/94/290	2014-001 R&B	COOK	696	201
		CONTRACT NO. 60X75		
		ILLINOIS FED. AID PROJECT		

FILE PATH = pw:\\617479-PWINT.aecomonline.local:AECOM_DS02_NA\Documents\01 Americas\Transportation\60269938 Circle\Phase_II\000_CAD\016_Electrical\Sheets\60X75_Contract\D160X75-SHT-Light-06

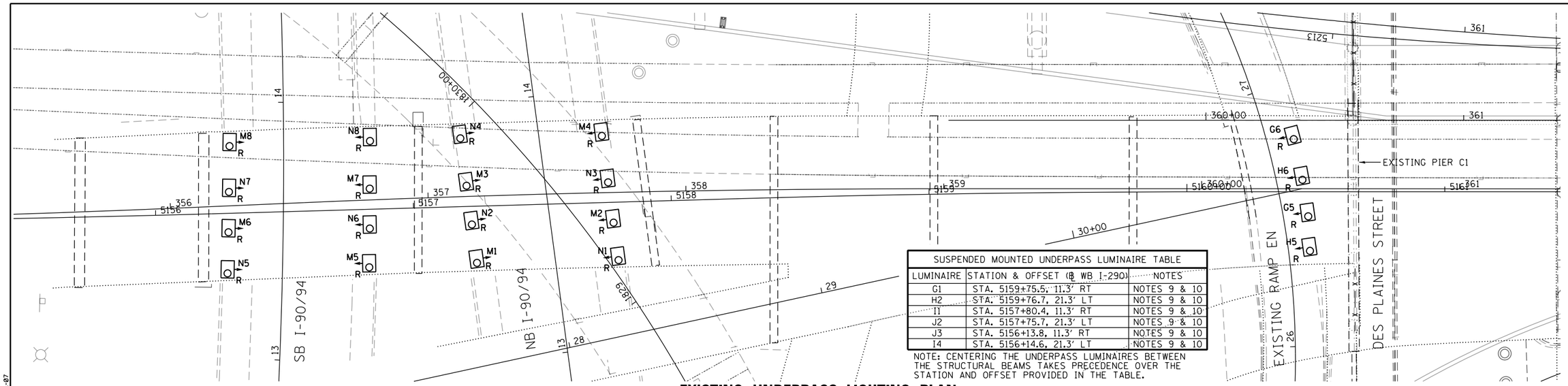

EXISTING UNDERPASS LIGHTING PLAN

NOTE 3

SUSPENDED MOUNTED UNDERPASS LUMINAIRE TABLE		
LUMINAIRE	STATION & OFFSET (℄ WB I-290)	NOTES
G1	STA. 5159+75.5, 11.3' RT	NOTES 9 & 10
H2	STA. 5159+76.7, 21.3' LT	NOTES 9 & 10
I1	STA. 5157+80.4, 11.3' RT	NOTES 9 & 10
J2	STA. 5157+75.7, 21.3' LT	NOTES 9 & 10
J3	STA. 5156+13.8, 11.3' RT	NOTES 9 & 10
I4	STA. 5156+14.6, 21.3' LT	NOTES 9 & 10

NOTE: CENTERING THE UNDERPASS LUMINAIRES BETWEEN THE STRUCTURAL BEAMS TAKES PRECEDENCE OVER THE STATION AND OFFSET PROVIDED IN THE TABLE.

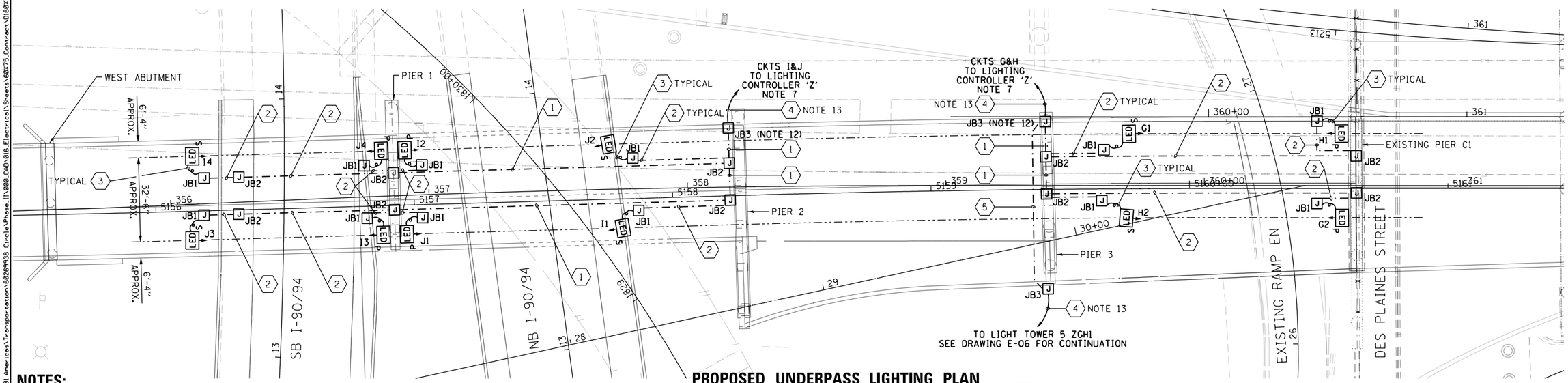

PROPOSED UNDERPASS LIGHTING PLAN

NOTES:

1. SEE DRAWING E-01 FOR IDOT ELECTRICAL SYMBOLS AND ABBREVIATIONS.
2. LOCATIONS OF EXISTING ELECTRICAL EQUIPMENT SHOWN ON THIS DRAWING ARE APPROXIMATIONS AND MUST BE VERIFIED IN THE FIELD BY THE CONTRACTOR.
3. THE REMOVAL OF EXISTING UNDERPASS LUMINAIRES MUST INCLUDE THE REMOVAL OF ALL CABLES, CONDUIT, JUNCTION BOXES, AND HARDWARE ASSOCIATED WITH THE EXISTING UNDERPASS LIGHTING. COST FOR THIS WORK WILL NOT BE PAID FOR SEPARATELY BUT WILL BE INCLUDED AS PART OF THE "REMOVAL OF LIGHTING UNIT, SALVAGE" PAY ITEM.
4. SEE IDOT STANDARD DRAWING BE-900 FOR ADDITIONAL INSTALLATION DETAILS FOR PROPOSED SUSPENDED MOUNT UNDERPASS LUMINAIRES. SUSPENDED MOUNT UNDERPASS LUMINAIRES SETBACK FROM THE EDGE OF PAVEMENT SHALL BE 2 FEET.
5. ALL PROPOSED UNDERPASS LIGHTING UNITS SHOWN ON THIS DRAWING WILL BE FED FROM EXISTING IDOT LIGHTING CONTROLLER "Z".
6. ALL VERTICAL CONDUIT RUNS ROUTED DOWN THE STRUCTURE SHALL BE INSTALLED ON THE INSIDE OF THE PIER FACING AWAY FROM TRAFFIC FLOW.
7. SEE DRAWINGS E-04 AND E-06 FOR CONTINUATION OF LIGHTING CIRCUIT.
8. SEE IDOT STANDARD DRAWINGS BE-900 AND BE-902 FOR ATTACHING 3" CONDUIT SLEEVE TO THE ABUTMENT/PIER AND ROUTING IT DOWN INTO GRADE FOR FUTURE USE, UNLESS OTHERWISE NOTED.
9. ALL UNDERPASS LUMINAIRES SHALL BE CENTERED BETWEEN THE STRUCTURAL BEAMS.
10. THE INSTALLATION LOCATIONS OF THE UNDERPASS LUMINAIRES ARE SHOWN FOR THE ULTIMATE ROADWAY CONFIGURATION TO BE CONSTRUCTED IN FUTURE IDOT CONTRACT 60X97. SEE THE UNDERPASS LUMINAIRE TABLE FOR APPROXIMATE INSTALLATION LOCATIONS.
11. PROVIDE TERMINAL BLOCKS AND 30A FUSES IN THE JUNCTION BOX FOR SPLICING THE NO. 10 UNDERPASS LIGHTING WIRES TO THE NO. 2 LIGHTING CIRCUIT WIRES.
12. SUSPENDED MOUNT UNDERPASS LUMINAIRES SETBACK FROM THE EDGE OF PAVEMENT SHALL BE 2 FEET.
13. ROUTE A 3-INCH PVCC RGS VERTICAL CONDUIT FROM THE PIER MOUNTED JUNCTION BOX DOWN THE PIER INTO GRADE. INSTALL THE 3-1/C NO. 2 & 1/C NO. 4 GROUND CABLES IN 1-1/2" INCH UNIT DUCT FOR THE LIGHTING CIRCUITS INTO THE 3-INCH VERTICAL CONDUIT AND SPLICE THE CABLES WITHIN THE JUNCTION BOX.

LED P — LED UNDERPASS LUMINAIRE, TYPE C ABUTMENT/PIER MOUNT

LED S — LED UNDERPASS LUMINAIRE, TYPE C SUSPENDED MOUNT, NOTE 12

JUNCTION BOX SCHEDULE		
NO.	SIZE	DESCRIPTION
JB1	6"X6"X4"	STAINLESS STEEL, ATTACHED TO STRUCTURE, UNDERPASS LIGHTING
JB2	12"X10"X6"	STAINLESS STEEL, ATTACHED TO STRUCTURE, UNDERPASS LIGHTING
JB3	18"X18"X8"	STAINLESS STEEL, ATTACHED TO STRUCTURE, UNDERPASS LIGHTING. NOTE 11

CABLE / CONDUIT SCHEDULE	
1	3-1/C#10, 1-1/C#10 GND IN 1" DIA PVCC RGC ATTACHED TO STRUCTURE (CKTS AS INDICATED ON THIS DRAWING)
2	2-1/C#10, 1-1/C#10 GND IN 1" DIA PVCC RGC ATTACHED TO STRUCTURE (CKTS AS INDICATED ON THIS DRAWING)
3	2-1/C#10, 1-1/C#10 GND IN 3/4" DIA LIQUID TIGHT FLEXIBLE CONDUIT (CKTS AS INDICATED ON THIS DRAWING)
4	3-1/C#2, 1-1/C#4 GND XLP TYPE USE CABLES IN A 1 1/2" UNIT DUCT (CKTS AS INDICATED ON THIS DRAWING)
5	3-1/C#2, 1-1/C#4 GND XLP TYPE USE CABLES IN A 3" DIA. PVCC RGC ATS (CKTS AS INDICATED ON THIS DRAWING)

N

0 20 40

SCALE: 1"=20'

E-07

AECOM
303 EAST WACKER DRIVE, SUITE 1400
CHICAGO, IL 60601-5276
PHONE: (312) 373-7700 FAX: (312) 373-6800

D160X75-sht-Light-07	DESIGNED - PFD	REVISED -	
USER NAME = myersc	DRAWN - CAM	REVISED -	
PLOT SCALE = 40.0000 ' / in.	CHECKED - WDS	REVISED -	
PLOT DATE = 5/3/2017	DATE - 5/10/2017	REVISED -	

STATE OF ILLINOIS
DEPARTMENT OF TRANSPORTATION

EB I-90/94 UNDERPASS LIGHTING PLAN

SCALE: 1"=20' | SHEET 7 OF 17 SHEETS | STA. | TO STA.

F.A.I. RTE.	SECTION	COUNTY	TOTAL SHEETS	SHEET NO.
90/94/290	2014-001 R&B	COOK	696	202
CONTRACT NO. 60X75				
ILLINOIS FED. AID PROJECT				

FILE PATH = pw:\\617479-PWINT.aecomonline.local:AECOM_DS02_NA\Documents\01 Americas\Transportation\60269938 Circle\Phase.II\000.CAD\016.Electrical\Sheets\60X75_Contract\D160X75-sht-Light-07

NOTES:

1. SEE DRAWING E-01 FOR IDOT ELECTRICAL SYMBOLS AND ABBREVIATIONS.
2. LOCATIONS OF EXISTING ELECTRICAL EQUIPMENT SHOWN ON THIS DRAWING ARE APPROXIMATIONS AND MUST BE VERIFIED IN THE FIELD BY THE CONTRACTOR.
3. THE REMOVAL OF EXISTING UNDERPASS LUMINAIRES MUST INCLUDE THE REMOVAL OF ALL CABLES, CONDUIT, JUNCTION BOXES, AND HARDWARE ASSOCIATED WITH THE EXISTING UNDERPASS LIGHTING. COST FOR THIS WORK WILL NOT BE PAID FOR SEPARATELY BUT WILL BE INCLUDED AS PART OF THE "REMOVAL OF LIGHTING UNIT, SALVAGE" PAY ITEM.

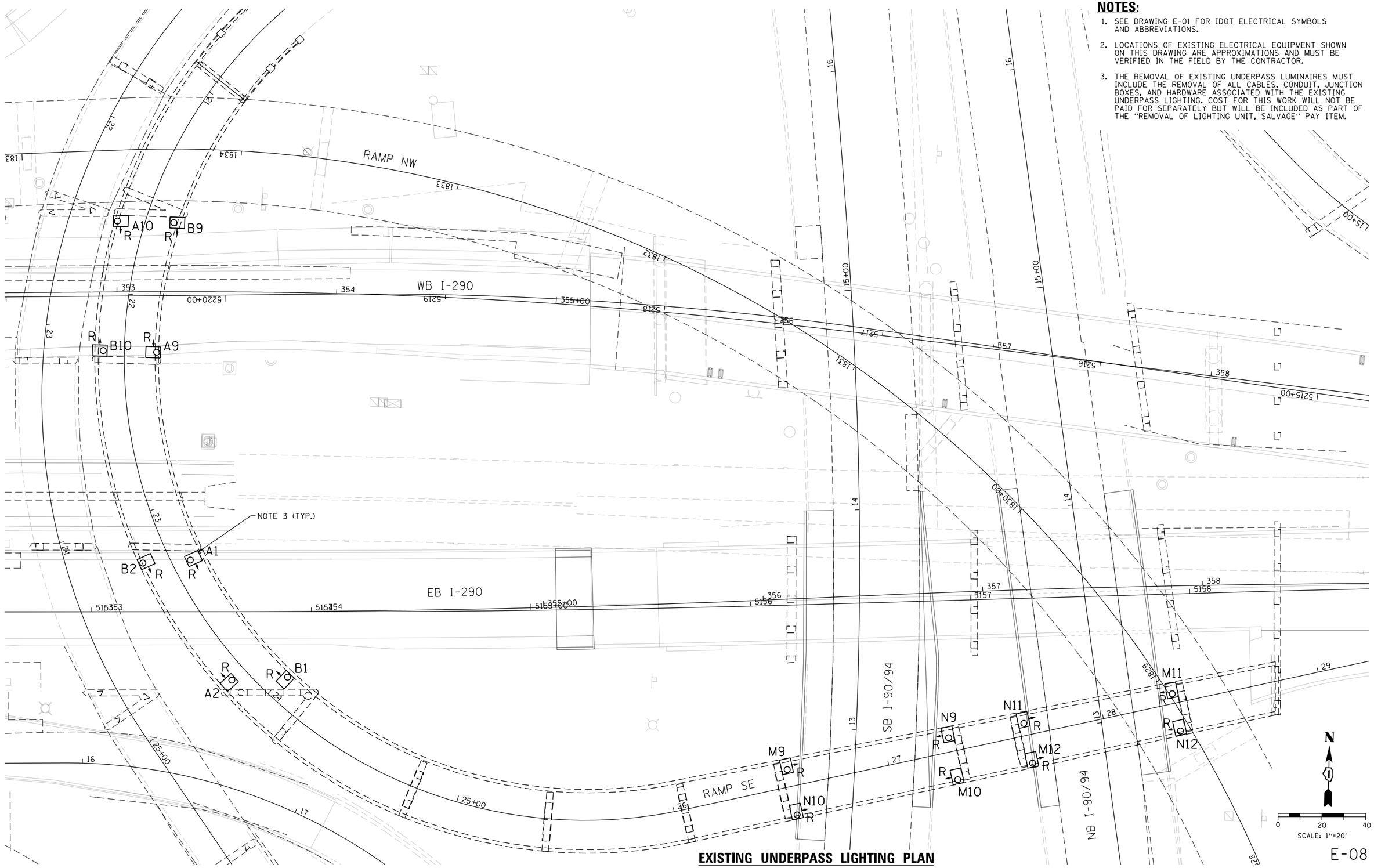

EXISTING UNDERPASS LIGHTING PLAN

E-08

AECOM 303 EAST WACKER DRIVE, SUITE 1400 CHICAGO, IL 60601-5276 PHONE: (312) 373-7700 FAX: (312) 373-6800	D160X75-sht-Light-08	DESIGNED - PFD	REVISED -
	USER NAME = myersc	DRAWN - CAM	REVISED -
	PLOT SCALE = 40.0000 ' / in.	CHECKED - WDS	REVISED -
	PLOT DATE = 5/3/2017	DATE - 5/10/2017	REVISED -

STATE OF ILLINOIS
DEPARTMENT OF TRANSPORTATION

EXISTING RAMP SE UNDERPASS LIGHTING REMOVAL PLAN

SCALE: 1"=20' | SHEET 8 OF 17 SHEETS | STA. | TO STA.

F.A.I. RTE.	SECTION	COUNTY	TOTAL SHEETS	SHEET NO.
90/94/290	2014-001 R&B	COOK	696	203
		CONTRACT NO. 60X75		
		ILLINOIS FED. AID PROJECT		

FILE PATH = pw:\\617479-PWINT.aecomonline.local:AECOM_DS02_NA\Documents\01 Americas\Transportation\60269938 Circle\Phase_II\000_CAD\016_Electrical\Sheets\60X75_Contract\D160X75-sht-Light-08

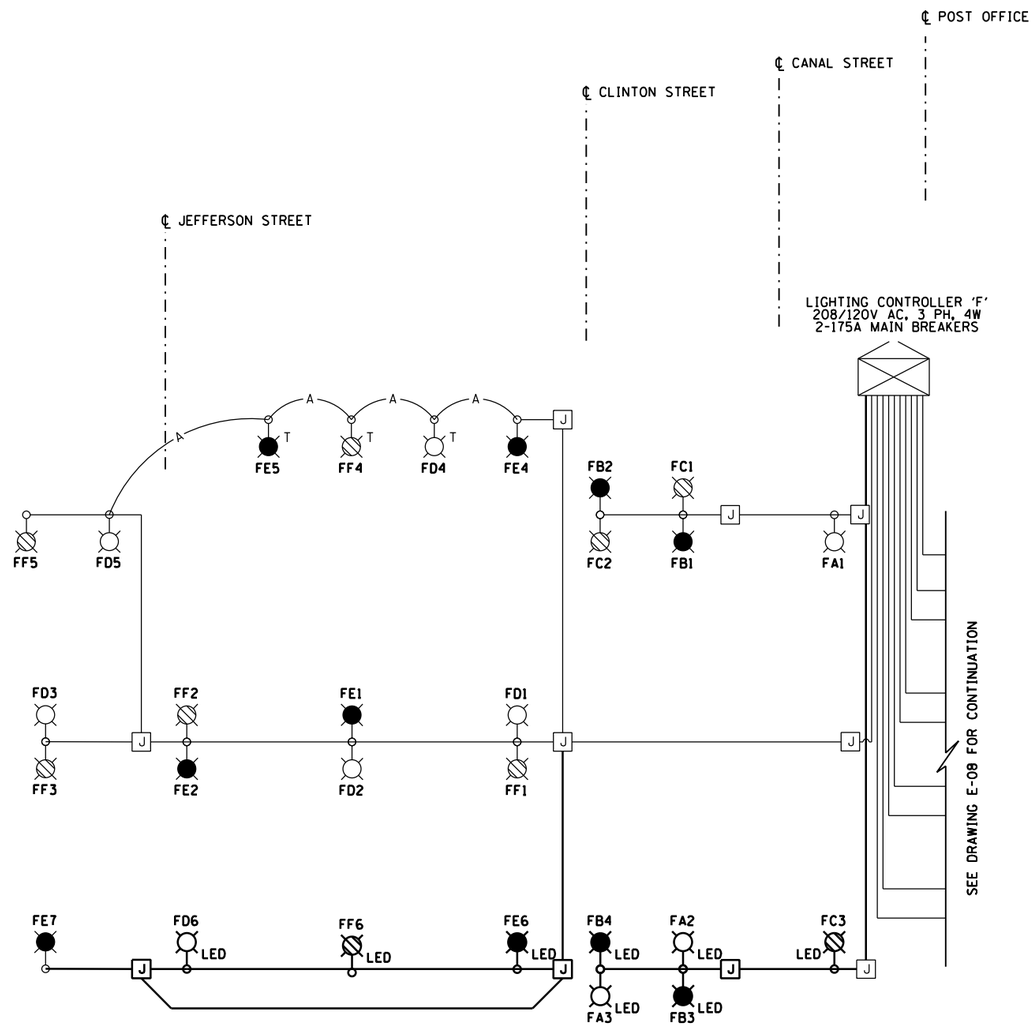

SYMBOLS LEGEND

IDOT LIGHTING CONTROLLER

JUNCTION BOX

LIGHTING UNIT (400W HPS LUMINAIRE)
(RED PHASE - OPEN SYMBOL
BLACK PHASE - SOLID SYMBOL
BLUE PHASE - STRIPED SYMBOL)

TWIN ARM LIGHTING UNIT (400W HPS LUMINAIRE)
(RED PHASE - OPEN SYMBOL
BLACK PHASE - SOLID SYMBOL
BLUE PHASE - STRIPED SYMBOL)

LIGHTING UNIT (LED LUMINAIRE)
(RED PHASE - OPEN SYMBOL
BLACK PHASE - SOLID SYMBOL
BLUE PHASE - STRIPED SYMBOL)

TWIN ARM LIGHTING UNIT (LED LUMINAIRE)
(RED PHASE - OPEN SYMBOL
BLACK PHASE - SOLID SYMBOL
BLUE PHASE - STRIPED SYMBOL)

LIGHTING UNIT (200W LUMINAIRE)
(RED PHASE - OPEN SYMBOL
BLACK PHASE - SOLID SYMBOL
BLUE PHASE - STRIPED SYMBOL)

TWIN ARM LIGHTING UNIT (200W LUMINAIRE)
(RED PHASE - OPEN SYMBOL
BLACK PHASE - SOLID SYMBOL
BLUE PHASE - STRIPED SYMBOL)

UNDERPASS LIGHTING UNIT
400 WATT HPS LUMINAIRE
(RED PHASE - OPEN SYMBOL
BLACK PHASE - SOLID SYMBOL
BLUE PHASE - STRIPED SYMBOL)

UNDERPASS LIGHTING UNIT
55 WATT LPS LUMINAIRE
(RED PHASE - OPEN SYMBOL
BLACK PHASE - SOLID SYMBOL
BLUE PHASE - STRIPED SYMBOL)

TEMPORARY LIGHTING UNIT
(400W HPS LUMINAIRE)
(RED PHASE - OPEN SYMBOL
BLACK PHASE - SOLID SYMBOL
BLUE PHASE - STRIPED SYMBOL)

TEMPORARY AERIAL CABLE

LOAD TABLE (120V)
LIGHTING CONTROLLER "F"

CIRCUIT	RED PHASE		CIRCUIT	BLACK PHASE		CIRCUIT	BLUE PHASE	
	AMPS	WATTS		AMPS	WATTS		AMPS	WATTS
A	7.45	894	B	13.08	1569	C	9.43	1131
D	22.80	2736	E	22.80	2736	F	22.80	2736
G	7.38	886	H	9.84	1181	I	9.84	1181
J	7.38	886	K	25.04	3005	L	25.04	3005
M	7.38	886	N	9.84	1181	O	9.84	1181
P	7.38	886	Q	9.84	1181	R	9.84	1181
S	-	-	T	-	-	U	-	-
V	9.44	2266	W	7.08	850	X	7.08	850
TOTAL	69.2	9,438	TOTAL	97.5	11,702	TOTAL	93.9	11,264

N

E-09

FILE PATH = pw:\\617479-PWINT.aecomonline.local:AECOM_DS02_NA\Documents\01 Americas\Transportation\60269938 Circle\Phase II\000_CAD\016_Electrical\Sheets\60X75_Contract\D160X75-sht-Light-09

AECOM
303 EAST WACKER DRIVE, SUITE 1400
CHICAGO, IL 60601-5276
PHONE: (312) 373-7700 FAX: (312) 373-6800

D160X75-sht-Light-09	DESIGNED - PFD	REVISED -
USER NAME = myersc	DRAWN - CAM	REVISED -
PLOT SCALE = 40.0000 ' / in.	CHECKED - WDS	REVISED -
PLOT DATE = 5/3/2017	DATE - 5/10/2017	REVISED -

STATE OF ILLINOIS
DEPARTMENT OF TRANSPORTATION

IDOT LIGHTING CONTROLLER 'F'
WIRING DIAGRAM - PART 1

SCALE: N.T.S. | SHEET 9 OF 17 SHEETS | STA. TO STA.

F.A.I. RTE.	SECTION	COUNTY	TOTAL SHEETS	SHEET NO.
90/94/290	2014-001 R&B	COOK	696	204
		CONTRACT NO. 60X75		
	ILLINOIS	FED. AID PROJECT		

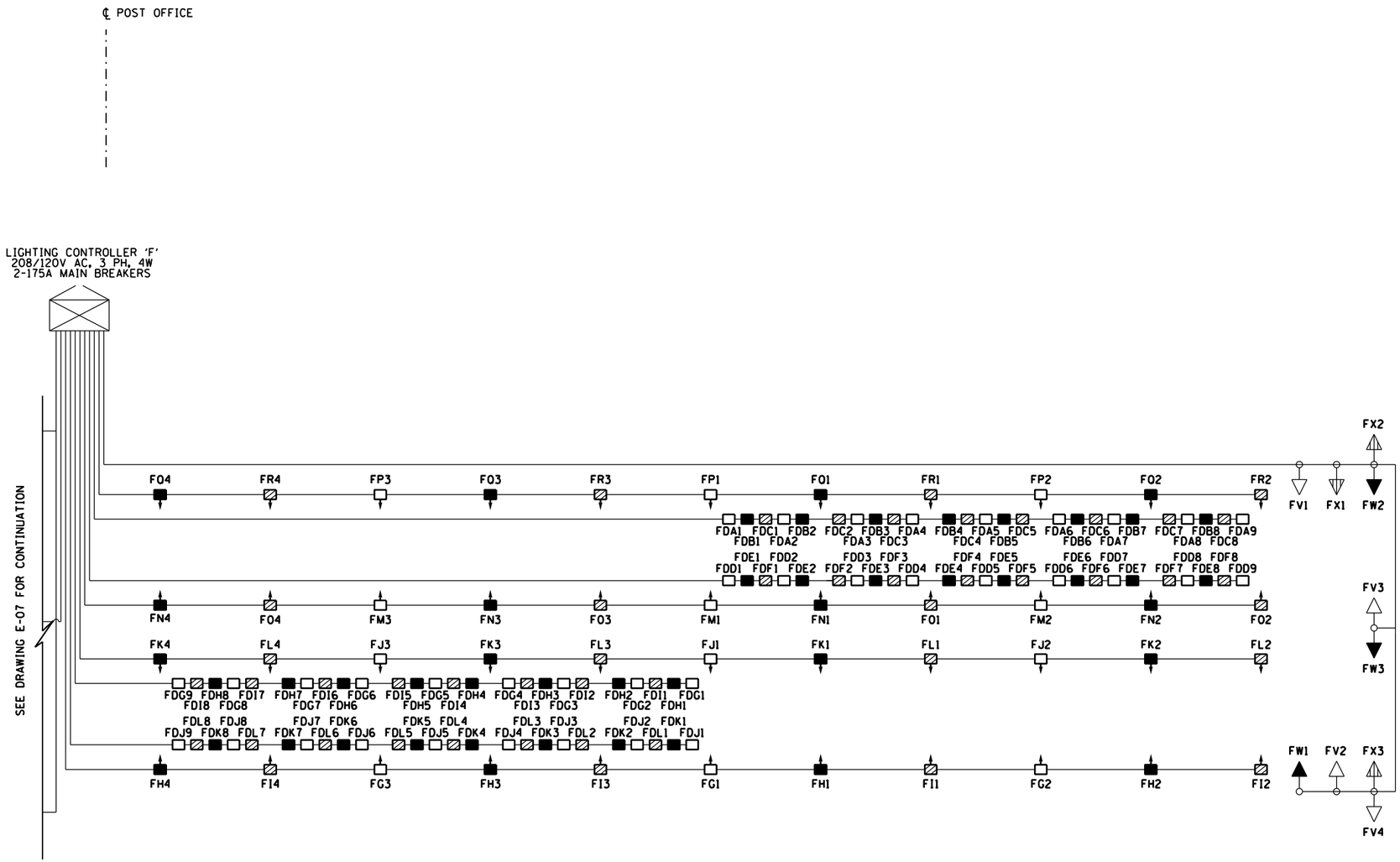

SYMBOLS LEGEND

- IDOT LIGHTING CONTROLLER
- JUNCTION BOX
- LIGHTING UNIT (400W HPS LUMINAIRE) (RED PHASE - OPEN SYMBOL BLACK PHASE - SOLID SYMBOL BLUE PHASE - STRIPED)
- TWIN ARM LIGHTING UNIT (400W HPS LUMINAIRE) (RED PHASE - OPEN SYMBOL BLACK PHASE - SOLID SYMBOL BLUE PHASE - STRIPED)
- LIGHTING UNIT (200W LUMINAIRE) (RED PHASE - OPEN SYMBOL BLACK PHASE - SOLID SYMBOL BLUE PHASE - STRIPED)
- TWIN ARM LIGHTING UNIT (200W LUMINAIRE) (RED PHASE - OPEN SYMBOL BLACK PHASE - SOLID SYMBOL BLUE PHASE - STRIPED)
- UNDERPASS LIGHTING UNIT 400 WATT HPS LUMINAIRE (RED PHASE - OPEN SYMBOL BLACK PHASE - SOLID SYMBOL BLUE PHASE - STRIPED)
- UNDERPASS LIGHTING UNIT 55 WATT LPS LUMINAIRE (RED PHASE - OPEN SYMBOL BLACK PHASE - SOLID SYMBOL BLUE PHASE - STRIPED)
- T — TEMPORARY LIGHTING UNIT (400W HPS LUMINAIRE) (RED PHASE - OPEN SYMBOL BLACK PHASE - SOLID SYMBOL BLUE PHASE - STRIPED)
- A — TEMPORARY AERIAL CABLE

NOTES:

1. NO WORK SHOWN ON THIS SHEET. FOR INFORMATION ONLY.

LOAD TABLE (120V)
LIGHTING CONTROLLER "F"

CIRCUIT	RED PHASE		CIRCUIT	BLACK PHASE		CIRCUIT	BLUE PHASE	
	AMPS	WATTS		AMPS	WATTS		AMPS	WATTS
DA	34.2	4104	DB	30.4	3648	DC	30.4	3648
DD	34.2	4104	DE	30.4	3648	DF	30.4	3648
DG	34.2	4104	DH	30.4	3648	DI	30.4	3648
DJ	34.2	4104	DK	30.4	3648	DL	30.4	3648
TOTAL	136.8	16,416	TOTAL	121.6	14,592	TOTAL	121.6	14,592

N

E-10

FILE PATH = pw:\\617479-PWINT.aecomonline.local:AECOM_DS02_NA\Documents\01 Americas\Transportation\60269938 Circle\Phase II\000_CAD\016_Electrical\Sheets\60X75_Contract\D160X75-sht-Light-10

AECOM
303 EAST WACKER DRIVE, SUITE 1400
CHICAGO, IL 60601-5276
PHONE: (312) 373-7700 FAX: (312) 373-6800

D160X75-sht-Light-10	DESIGNED - PFD	REVISED -
USER NAME = myersc	DRAWN - CAM	REVISED -
PLOT SCALE = 40.0000 ' / in.	CHECKED - WDS	REVISED -
PLOT DATE = 5/3/2017	DATE - 5/10/2017	REVISED -

STATE OF ILLINOIS
DEPARTMENT OF TRANSPORTATION

IDOT LIGHTING CONTROLLER 'F'
WIRING DIAGRAM - PART 2

SCALE: N.T.S. | SHEET 10 OF 17 SHEETS | STA. TO STA.

F.A.I. RTE.	SECTION	COUNTY	TOTAL SHEETS	SHEET NO.
90/94/290	2014-001 R&B	COOK	696	205
		CONTRACT NO. 60X75		
		ILLINOIS FED. AID PROJECT		

SYMBOLS LEGEND

IDOT LIGHTING CONTROLLER

J — JUNCTION BOX

UNDERPASS LIGHTING UNIT
55 WATT LPS LUMINAIRE
(BLACK PHASE - SOLID SYMBOL
RED PHASE - OPEN SYMBOL)

LED — UNDERPASS LIGHTING UNIT
LED LUMINAIRE
(BLACK PHASE - SOLID SYMBOL
RED PHASE - OPEN SYMBOL)

HIGH MAST LIGHT TOWER
400 WATT HPS LUMINAIRE
(BLACK PHASE - SOLID SYMBOL
RED PHASE - OPEN SYMBOL)

70 — UNDERPASS LIGHTING UNIT
70 OR 100 WATT HPS LUMINAIRE
(BLACK PHASE - SOLID SYMBOL
RED PHASE - OPEN SYMBOL)

LED — HIGH MAST LIGHT TOWER
LED LUMINAIRE
(BLACK PHASE - SOLID SYMBOL
RED PHASE - OPEN SYMBOL)

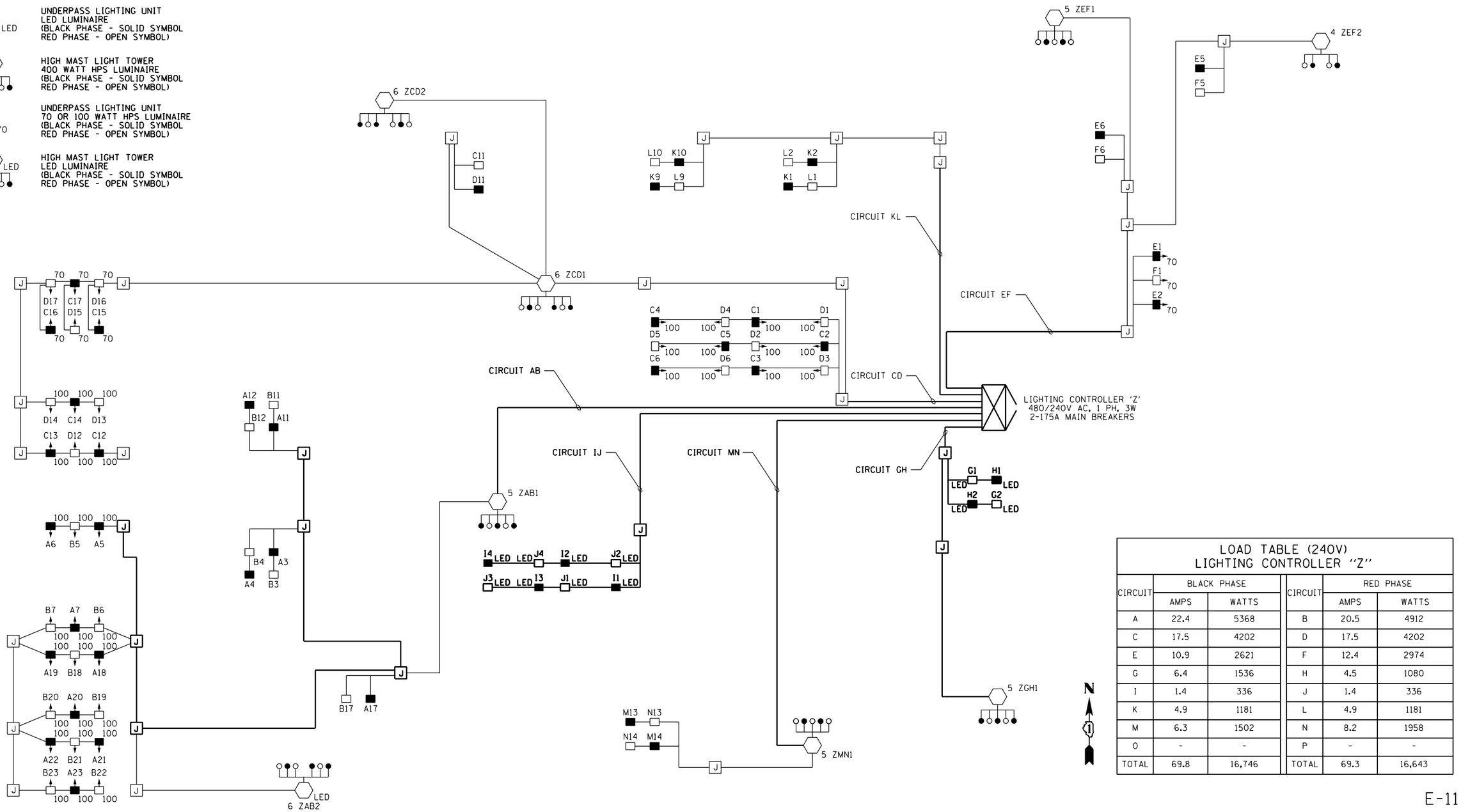

LOAD TABLE (240V)
LIGHTING CONTROLLER "Z"

CIRCUIT	BLACK PHASE		CIRCUIT	RED PHASE	
	AMPS	WATTS		AMPS	WATTS
A	22.4	5368	B	20.5	4912
C	17.5	4202	D	17.5	4202
E	10.9	2621	F	12.4	2974
G	6.4	1536	H	4.5	1080
I	1.4	336	J	1.4	336
K	4.9	1181	L	4.9	1181
M	6.3	1502	N	8.2	1958
O	-	-	P	-	-
TOTAL	69.8	16,746	TOTAL	69.3	16,643

E-11

NOTES:

1. SEE DRAWING E-01 FOR IDOT ELECTRICAL SYMBOLS.
2. UTILITY SWITCH GEAR, TRANSFORMER AND CONCRETE SERVICE PADS TO BE INSTALLED BY OTHERS.
3. PROVIDE A UTILITY SERVICE FEED FROM THE SECONDARY SIDE OF THE UTILITY TRANSFORMER AND PAD TO THE NEW IDOT MAIN DISTRIBUTION PANEL. ALL WORK SHALL BE COORDINATED WITH AND INSTALLED IN ACCORDANCE WITH THE REQUIREMENTS AND STANDARDS OF THE ELECTRIC UTILITY SERVICE PROVIDER, COMED.
4. THE CONTRACTOR SHALL STAKE THE FINAL LOCATIONS OF THE PROPOSED EQUIPMENT AND BOLLARDS IN THE FIELD FOR THE ENGINEER'S AND COMED'S REVIEW AND APPROVAL PRIOR TO STARTING ANY WORK.
5. NOT USED.
6. THE BOLLARDS SHALL BE PAINTED. COLOR SHALL BE SAFETY YELLOW.
7. PROVIDE SEPARATE POWER FEEDS FROM THE POWER DISTRIBUTION CENTER TO THE NEW IDOT LIGHTING CONTROLLER Z AND SURVEILLANCE CABINET Z4. THE CONDUITS SHALL BE ATTACHED TO THE UNDERSIDE OF THE I-290 WB BRIDGE STRUCTURE ON THE EXISTING BEAMS USING IDOT APPROVED PVC COATED BEAM CLAMPS AND HARDWARE. SEE DRAWING E-04 FOR CONTINUATION OF THE POWER FEEDS.
8. THE CONDUITS FOR THE POWER FEEDS TO CONTROLLER Z AND SURVEILLANCE CABINET Z4 SHALL BE ROUTED OUT OF THE DOUBLE HANDHOLE TO THE EAST FACE OF EXISTING WB I-290 PIER C2 AS SHOWN. THE CONDUIT SHALL BE ROUTED VERTICALLY UP THE FACE OF PIER C2 TO THE NEW JUNCTION BOXES THEN TO THE BRIDGE BEAMS AS SHOWN. PROVIDE SEPARATE JUNCTION BOXES FOR THE LIGHTING AND ITS SYSTEMS. THE BELOW GRADE CONDUIT SHALL BE PVC AND THE CONDUIT ATTACHED TO STRUCTURE SHALL BE PVCC RIGID GALVANIZED STEEL. PROVIDE A PVC TO PVCC RGC COUPLING FOR CONNECTING THE TO CONDUIT TYPES.
9. PROVIDE A GROUNDING SYSTEM FOR THE POWER DISTRIBUTION CENTER SIMILAR TO THE GROUNDING FIELD WITH GROUND ELECTRODES, CABLES AND WELLS AS SHOWN ON IDOT DISTRICT 1 STANDARD BE-205. THE GROUNDING SYSTEM WILL NOT BE PAID FOR SEPARATELY AND SHALL BE INCLUDED IN THE COST OF THE "POWER DISTRIBUTION CENTER, GROUND MOUNT" PAY ITEM.
10. PROVIDE A CONCRETE FOUNDATION FOR THE POWER DISTRIBUTION CENTER SIMILAR TO THE CONCRETE FOUNDATION SHOWN ON IDOT DISTRICT 1 STANDARD BE-205. THE DIMENSIONS OF THE FOUNDATION SHALL BE ADJUSTED IN THE FIELD AS REQUIRED TO MATCH THE ACTUAL DIMENSIONS TO THAT OF THE POWER DISTRIBUTION CENTER ENCLOSURE. THE CONCRETE FOUNDATION WILL NOT BE PAID FOR SEPARATELY AND SHALL BE INCLUDED IN THE COST OF THE "POWER DISTRIBUTION CENTER, GROUND MOUNT" PAY ITEM.
11. ALL WORK SHALL BE COORDINATED WITH THE LOCAL ELECTRIC UTILITY COMPANY (COMED). THE EQUIPMENT LOCATIONS AND REQUIRED CLEARANCES SHOWN FOR THE PROPOSED UTILITY EQUIPMENT MUST BE COORDINATED AND APPROVED BY COMED PRIOR TO BEGINNING ANY WORK.

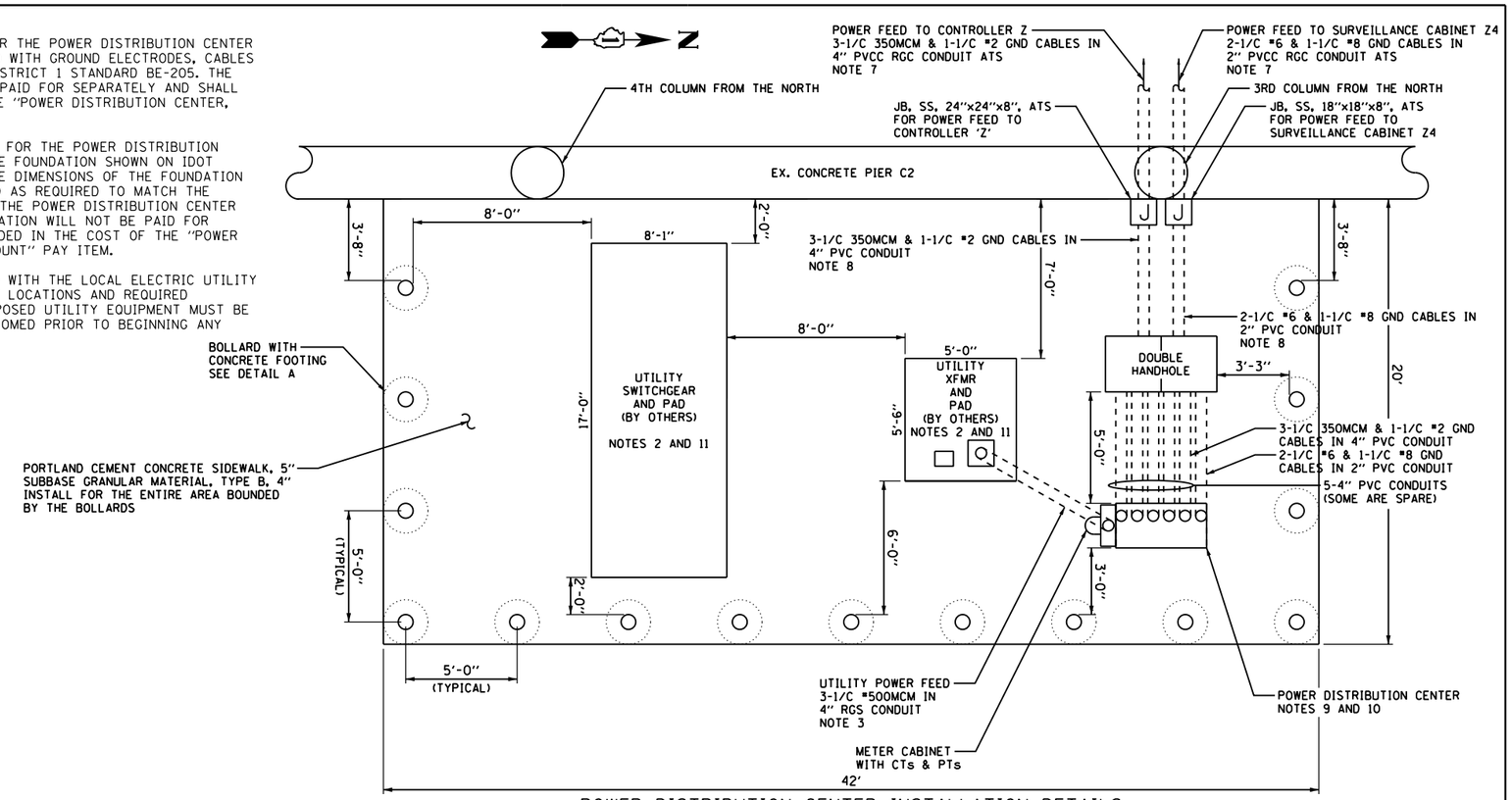

POWER DISTRIBUTION CENTER INSTALLATION DETAILS
(NOT TO SCALE) NOTE 4

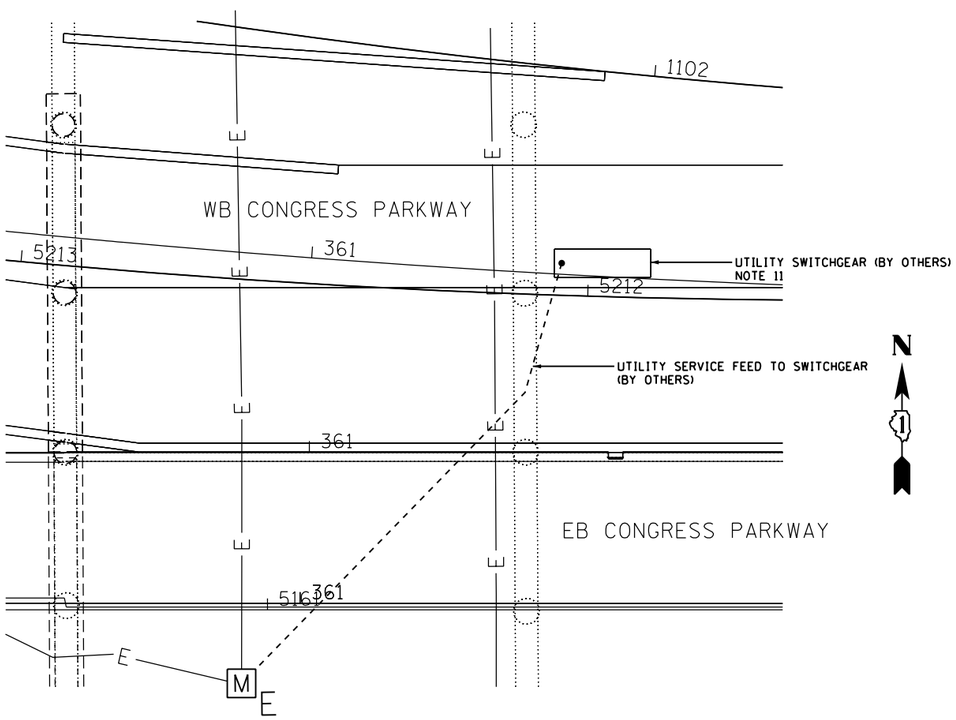

UTILITY SERVICE FEED TO IDOT POWER DISTRIBUTION CENTER PLAN
(NOT TO SCALE)

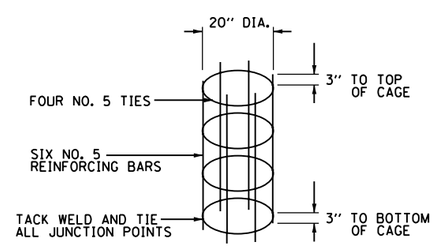

ISOMETRIC VIEW OF STEEL CAGE
(NOT TO SCALE)

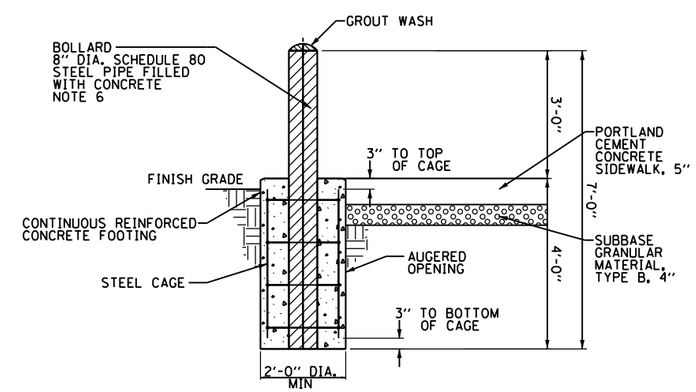

DETAIL - A
(NOT TO SCALE)

E-12

FILE PATH = pw:\\617479-PWINT.aecomonline.local:AECOM.DS02.NA\Documents\01 Americas\Transportation\60269938 Circle\Phase II\000_CAD\016.Electrical\Sheets\60X75_Contract\D160X75-sht-Light-12

AECOM
303 EAST WACKER DRIVE, SUITE 1400
CHICAGO, IL 60601-5276
PHONE: (312) 373-7700 FAX: (312) 373-6800

D160X75-sht-Light-12	DESIGNED - PFD	REVISED -	
USER NAME = myersc	DRAWN - CAM	REVISED -	
PLOT SCALE = 40.0000 ' / in.	CHECKED - WDS	REVISED -	
PLOT DATE = 6/15/2017	DATE - 6/16/2017	REVISED -	

STATE OF ILLINOIS
DEPARTMENT OF TRANSPORTATION

IDOT MISCELLANEOUS ELECTRICAL DETAILS

SCALE: N.T.S. | SHEET 12 OF 17 SHEETS | STA. TO STA.

F.A.I. RTE.	SECTION	COUNTY	TOTAL SHEETS	SHEET NO.
90/94/290	2014-001 R&B	COOK	696	207
		CONTRACT NO. 60X75		
	ILLINOIS	FED. AID PROJECT		

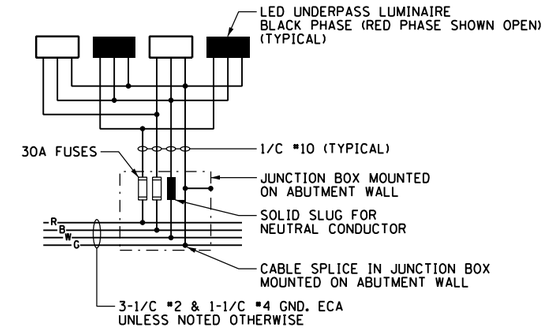

TYPICAL UNDERPASS LIGHTING UNIT WIRING DIAGRAM

(NOT TO SCALE)

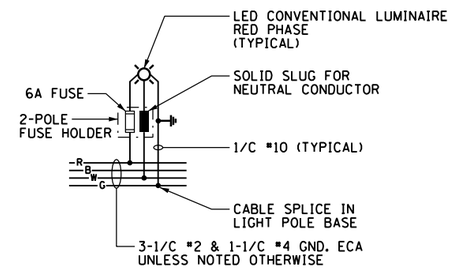

TYPICAL CONVENTIONAL LIGHTING UNIT WIRING DIAGRAM

(NOT TO SCALE)

AECOM
303 EAST WACKER DRIVE, SUITE 1400
CHICAGO, IL 60601-5276
PHONE: (312) 373-7700 FAX: (312) 373-6800

D160X75-sht-Light-13	DESIGNED - PFD	REVISED -
USER NAME = myersc	DRAWN - CAM	REVISED -
PLOT SCALE = 40.0000 ' / in.	CHECKED - WDS	REVISED -
PLOT DATE = 5/3/2017	DATE - 5/10/2017	REVISED -

STATE OF ILLINOIS
DEPARTMENT OF TRANSPORTATION

IDOT MISCELLANEOUS ELECTRICAL DETAILS

SCALE: N.T.S. | SHEET 13 OF 17 SHEETS | STA. TO STA.

F.A.I. RTE.	SECTION	COUNTY	TOTAL SHEETS	SHEET NO.
90/94/290	2014-001 R&B	COOK	696	208
		CONTRACT NO. 60X75		
	ILLINOIS	FED. AID PROJECT		

FILE PATH = pw:\\67479-PWINT.aecomonline.local:AECOM_DS02_NA\Documents\01 Americas\Transportation\60269938 Circle\Phase II\000.CAD\016.Electrical\Sheets\60X75_Contract\D160X75-sht-Light-13

TOTAL SHEETS	SHEET NO.
696	209

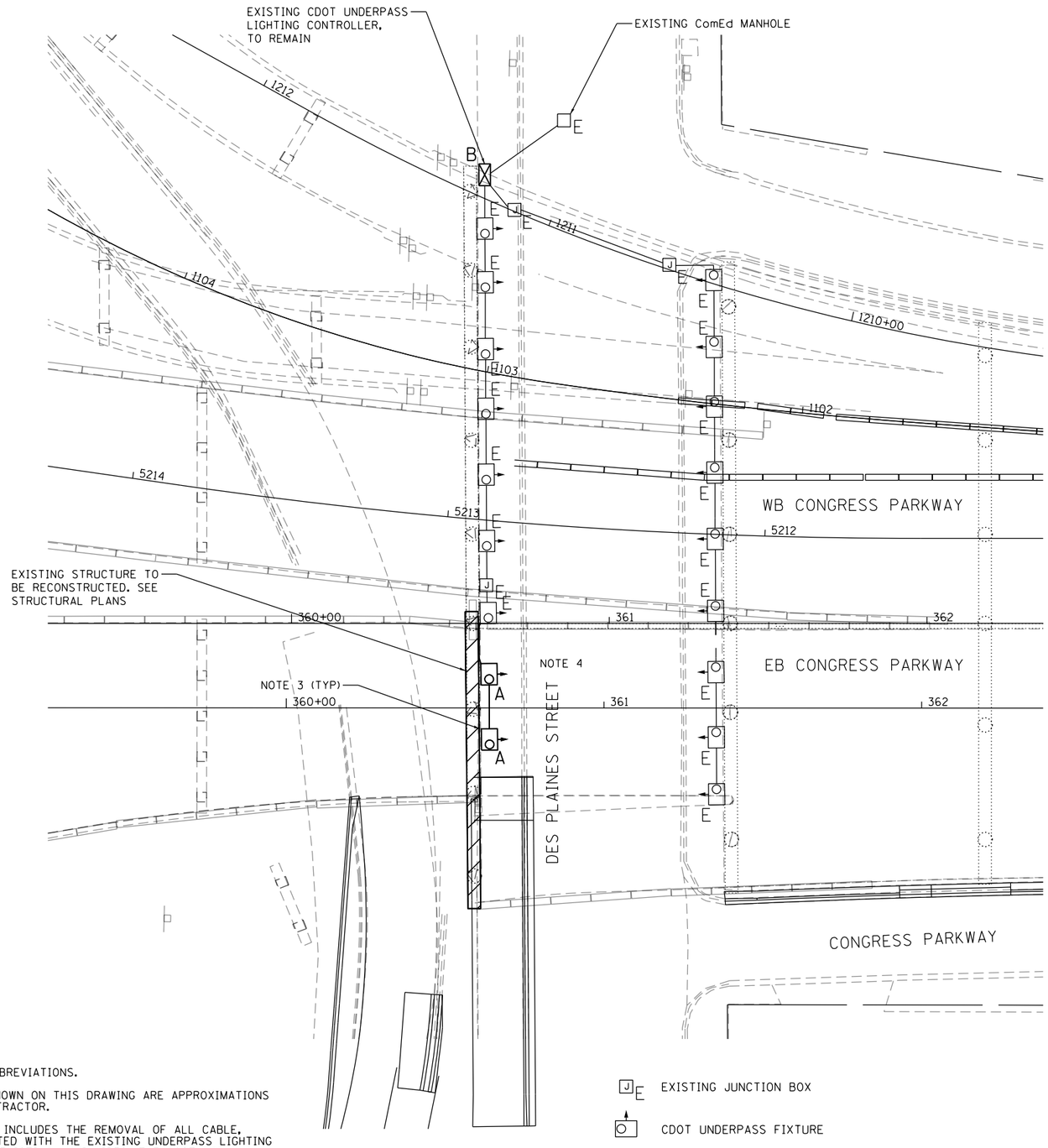

NOTES:

1. SEE THIS SHEET FOR ELECTRICAL SYMBOLS AND ABBREVIATIONS.
2. LOCATIONS OF EXISTING ELECTRICAL EQUIPMENT SHOWN ON THIS DRAWING ARE APPROXIMATIONS AND MUST BE VERIFIED IN THE FIELD BY THE CONTRACTOR.
3. THE REMOVAL OF EXISTING UNDERPASS LUMINAIRES INCLUDES THE REMOVAL OF ALL CABLE, CONDUIT, JUNCTION BOXES AND HARDWARE ASSOCIATED WITH THE EXISTING UNDERPASS LIGHTING SYSTEM MADE OBSOLETE BY THE REMOVAL OF THE EXISTING LUMINAIRES. THE COST FOR THIS WORK WILL NOT BE PAID FOR SEPARATELY BUT WILL BE INCLUDED AS PART OF THE "RELOCATE EXISTING LUMINAIRE" PAY ITEM.
4. THE EXISTING UNDERPASS LIGHTING SYSTEM FOR DES PLAINES STREET SHALL BE PROTECTED AND MAINTAINED THROUGHOUT THE DURATION OF THIS CONTRACT. THIS WORK WILL BE INCLUDED IN THE "PROTECTION AND MAINTENANCE OF EXISTING UNDERPASS LUMINAIRES" PAY ITEM.

J E EXISTING JUNCTION BOX

CDOT UNDERPASS FIXTURE

"A" REMOVE AND REINSTALL EXISTING UNDERPASS LIGHTING UNIT
"B" EXISTING UNDERPASS LIGHTING CONTROLLER TO REMAIN
"E" EXISTING TO REMAIN

N

0 20 40
SCALE: 1"=20'

Circle INTERCHANGE

DATE	REVISION

CITY OF CHICAGO

DEPARTMENT OF TRANSPORTATION
DIVISION OF ENGINEERING

CONSULTANT: AECOM
303 EAST WACKER DRIVE, SUITE 1400
CHICAGO, IL 60601-5276
PHONE: (312) 373-7700 FAX: (312) 373-6800

WORK ORDER NO. _____ DATE _____
COST ALLOCATION ACCOUNT _____
APPROPRIATION ACCOUNT { MATERIAL _____ LABOR _____

DES PLAINES STREET
EXISTING UNDERPASS LIGHTING PLAN (CDOT)

CITY OF CHICAGO
DEPT. OF TRANSPORTATION
DIVISION OF ELECTRICAL OPERATIONS

DRAFTSMAN: CAM	CHIEF DRAFTSMAN:	ENGINEER: WDS
SUPERVISING ENGINEER: JPC	ELEC. DESIGN ENGR.	E-14
ENGINEER OF ELECTRICITY:		
GEN'L SUPT. OF ELECTRICITY:		
DEPUTY COMMISSIONER:		
SIZE: 22" | 34"	SCALE: 1" = 20'	DATE: 5/10/2017
DATE: 5/10/2017	DWG. NO.: 14 OF 17	
C.D.O.T. PROJECT NO.:		

TOTAL SHEETS	SHEET NO.
696	210

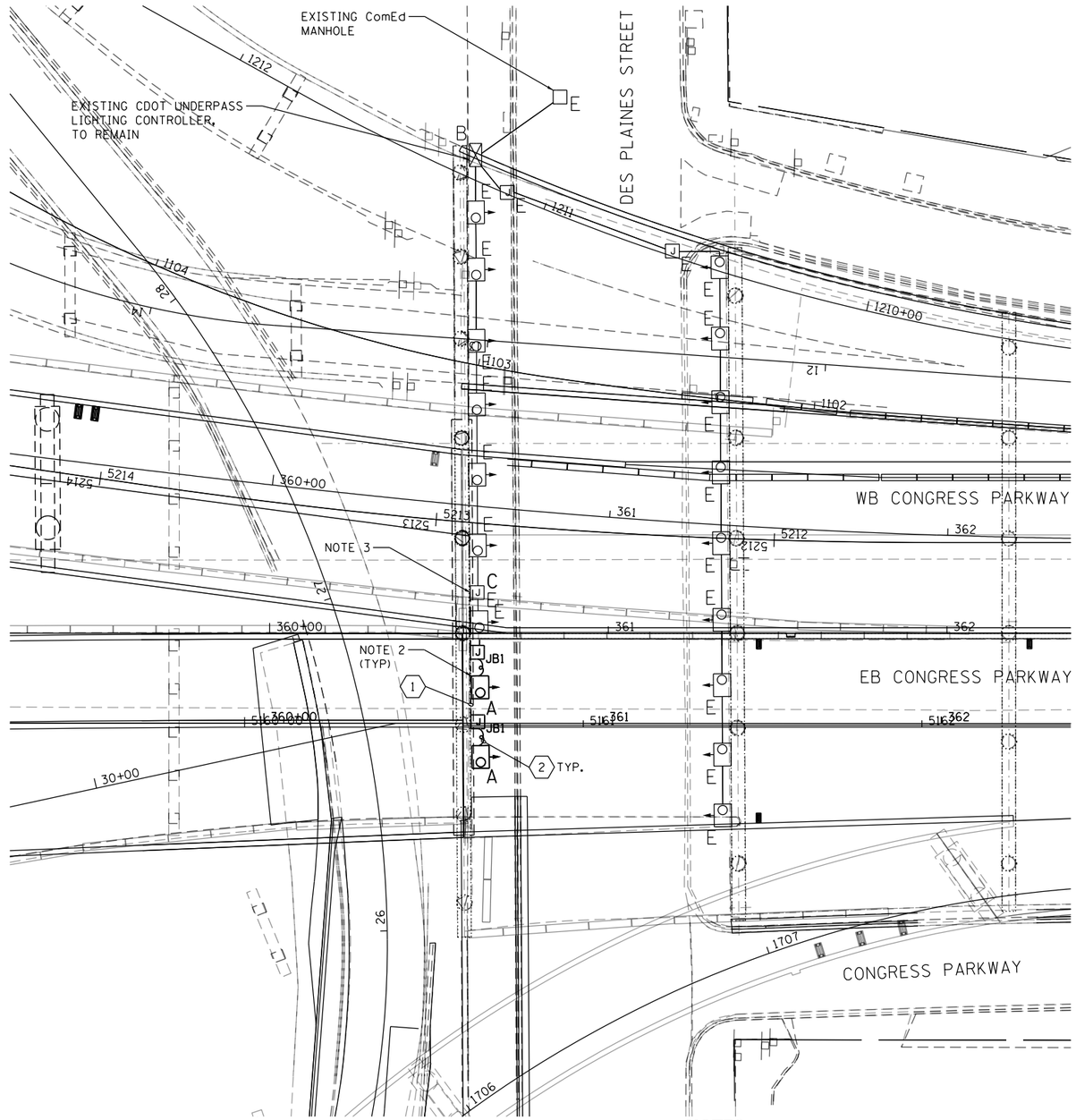

CABLE / CONDUIT SCHEDULE	
1	3#10 & 1#10 GND IN 3/4" DIA. RGS, ATS
2	2#10 & 1#10 GND IN 3/4" DIA. LIQUID TIGHT, NON-METALLIC, FLEXIBLE CONDUIT.

JUNCTION BOX SCHEDULE		
NO.	SIZE	DESCRIPTION
JB1	6"x6"x4"	STAINLESS STEEL, ATTACHED TO STRUCTURE, UNDERPASS LIGHTING

J E EXISTING JUNCTION BOX

CDOT UNDERPASS FIXTURE

J PROPOSED JUNCTION BOX. SEE JUNCTION BOX SCHEDULE FOR SIZE.

"A" REINSTALL EXISTING UNDERPASS LIGHTING UNIT ATTACHED TO PIER

"B" EXISTING UNDERPASS LIGHTING CONTROLLER TO REMAIN

"C" CONNECT CONDUIT TO EXISTING JUNCTION BOX

"E" EXISTING TO REMAIN

NOTES:

1. SEE THIS SHEET FOR ELECTRICAL SYMBOLS AND ABBREVIATIONS.
2. ALL WORK INCLUDING, BUT NOT LIMITED TO, CONDUITS, CONDUIT WHIPS, CABLES, JUNCTION BOXES AND APPURTENANCES NECESSARY TO REINSTALL AND RECONNECT THE EXISTING LUMINAIRES TO THE EXISTING UNDERPASS SYSTEM WILL NOT BE PAID FOR SEPARATELY AND SHALL BE INCLUDED IN THE COST OF THE "RELOCATE EXISTING LUMINAIRE" PAY ITEM.
3. ROUTE NEW LIGHTING CIRCUIT CONDUITS AND CABLE TO THE LAST JUNCTION BOX AND LUMINAIRE UNAFFECTED BY THE CONSTRUCTION WORK.

N

0 20 40
SCALE: 1"=20'

Circle INTERCHANGE

DATE	REVISION

CITY OF CHICAGO

DEPARTMENT OF TRANSPORTATION
DIVISION OF ENGINEERING

CONSULTANT: AECOM
303 EAST WACKER DRIVE, SUITE 1400
CHICAGO, IL 60601-5276
PHONE: (312) 373-7700 FAX: (312) 373-6800

WORK ORDER NO. _____ DATE _____
COST ALLOCATION ACCOUNT _____
APPROPRIATION ACCOUNT { MATERIAL _____ LABOR _____

DES PLAINES STREET
FINAL UNDERPASS LIGHTING PLAN (CDOT)

CITY OF CHICAGO
DEPT. OF TRANSPORTATION
DIVISION OF ELECTRICAL OPERATIONS

DRAFTSMAN: CAM	CHIEF DRAFTSMAN:	ENGINEER: WDS
SUPERVISING ENGINEER: JPC	ELEC. DESIGN ENGR.	
ENGINEER OF ELECTRICITY:		E-15
GEN'L SUPT. OF ELECTRICITY:		
DEPUTY COMMISSIONER:		
SIZE: 22" | 34"	SCALE: 1" = 20'	DATE: 5/10/2017
DATE: 5/10/2017	DWG. NO.: 15 OF 17	
C.D.O.T. PROJECT NO.:		

TOTAL SHEETS	SHEET NO.
696	211

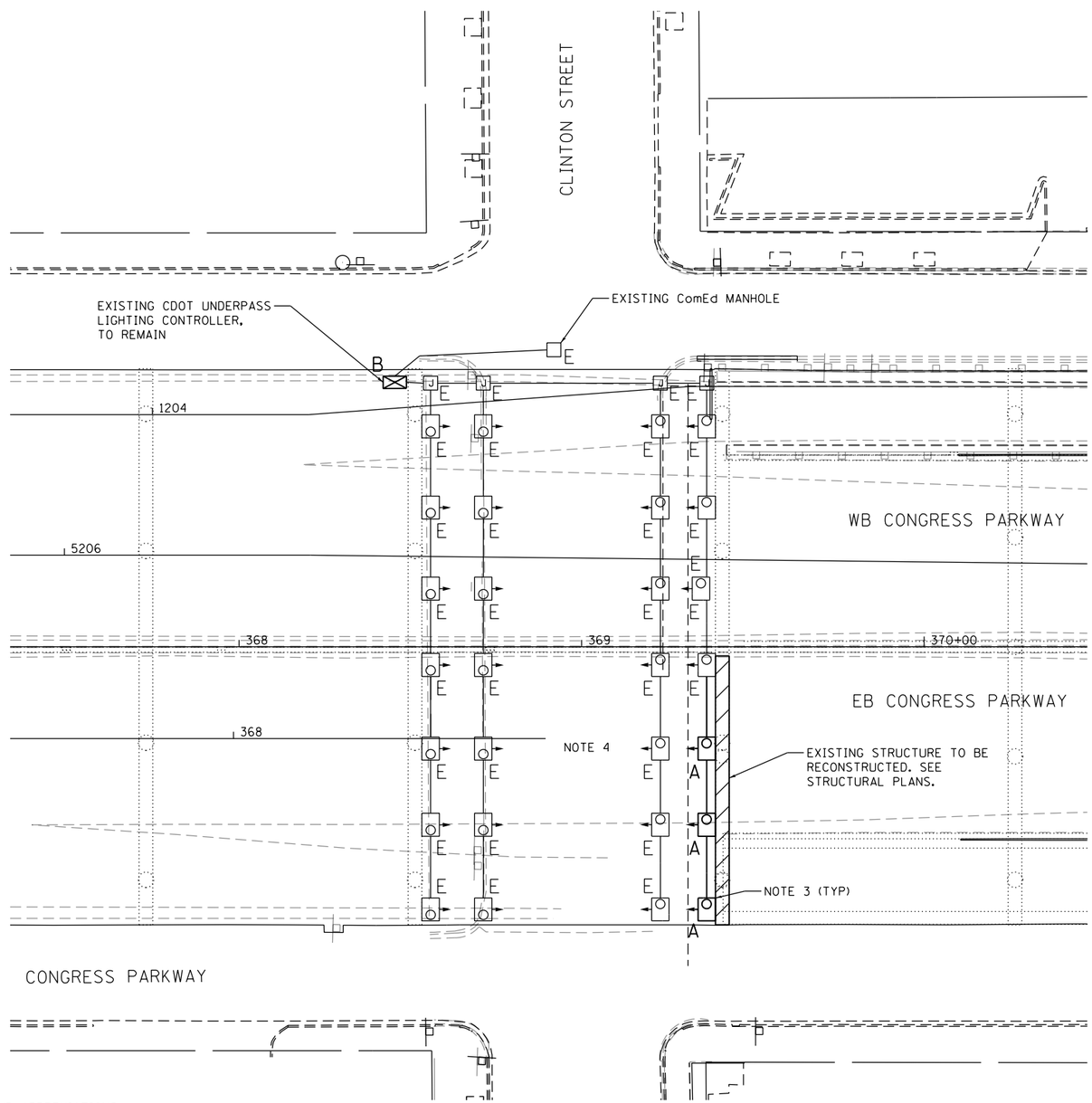

NOTES:

1. SEE THIS SHEET FOR ELECTRICAL SYMBOLS AND ABBREVIATIONS.
2. LOCATIONS OF EXISTING ELECTRICAL EQUIPMENT SHOWN ON THIS DRAWING ARE APPROXIMATIONS AND MUST BE VERIFIED IN THE FIELD BY THE CONTRACTOR.
3. THE REMOVAL OF EXISTING UNDERPASS LUMINAIRES INCLUDES THE REMOVAL OF ALL CABLE, CONDUIT, JUNCTION BOXES AND HARDWARE ASSOCIATED WITH THE EXISTING UNDERPASS LIGHTING SYSTEM MADE OBSOLETE BY THE REMOVAL OF THE EXISTING LUMINAIRES. THE COST FOR THIS WORK WILL NOT BE PAID FOR SEPARATELY BUT WILL BE INCLUDED AS PART OF THE "RELOCATE EXISTING LUMINAIRE" PAY ITEM.
4. THE EXISTING UNDERPASS LIGHTING SYSTEM FOR CLINTON STREET SHALL BE PROTECTED AND MAINTAINED THROUGHOUT THE DURATION OF THIS CONTRACT. THIS WORK WILL BE INCLUDED IN THE "PROTECTION AND MAINTENANCE OF EXISTING UNDERPASS LUMINAIRES" PAY ITEM.

J E EXISTING JUNCTION BOX

CDOT UNDERPASS FIXTURE

"A"	REMOVE AND REINSTALL EXISTING UNDERPASS LIGHTING UNIT
"B"	EXISTING UNDERPASS LIGHTING CONTROLLER TO REMAIN
"E"	EXISTING TO REMAIN

N

0 20 40

SCALE: 1"=20'

Circle INTERCHANGE

DATE	REVISION

CITY OF CHICAGO

DEPARTMENT OF TRANSPORTATION
DIVISION OF ENGINEERING

CONSULTANT: AECOM
303 EAST WACKER DRIVE, SUITE 1400
CHICAGO, IL 60601-5276
PHONE: (312) 373-7700 FAX: (312) 373-6800

WORK ORDER NO. _____ DATE _____
COST ALLOCATION ACCOUNT _____
APPROPRIATION ACCOUNT { MATERIAL _____ LABOR _____

CLINTON STREET
EXISTING UNDERPASS LIGHTING PLAN (CDOT)

CITY OF CHICAGO
DEPT. OF TRANSPORTATION
DIVISION OF ELECTRICAL OPERATIONS

DRAFTSMAN: CAM	CHIEF DRAFTSMAN:	ENGINEER: WDS
SUPERVISING ENGINEER: JPC	ELEC. DESIGN ENGR.	E-16
ENGINEER OF ELECTRICITY:		
GEN'L SUPT. OF ELECTRICITY:		
DEPUTY COMMISSIONER:		
SIZE: 22" | 34"	SCALE: 1" = 20'	DATE: 5/10/2017
DATE: 5/10/2017	DWG. NO.: 16 OF 17	
C.D.O.T. PROJECT NO.:		

TOTAL SHEETS	SHEET NO.
696	212

CABLE / CONDUIT SCHEDULE	
1	3#10 & 1#10 GND IN 3/4" DIA. RGS, ATS
2	2#10 & 1#10 GND IN 3/4" DIA. LIQUID TIGHT, NON-METALLIC, FLEXIBLE CONDUIT.

JUNCTION BOX SCHEDULE		
NO.	SIZE	DESCRIPTION
JB1	6"x6"x4"	STAINLESS STEEL, ATTACHED TO STRUCTURE, UNDERPASS LIGHTING

J E EXISTING JUNCTION BOX

CDOT UNDERPASS FIXTURE

J PROPOSED JUNCTION BOX. SEE JUNCTION BOX SCHEDULE FOR SIZE.

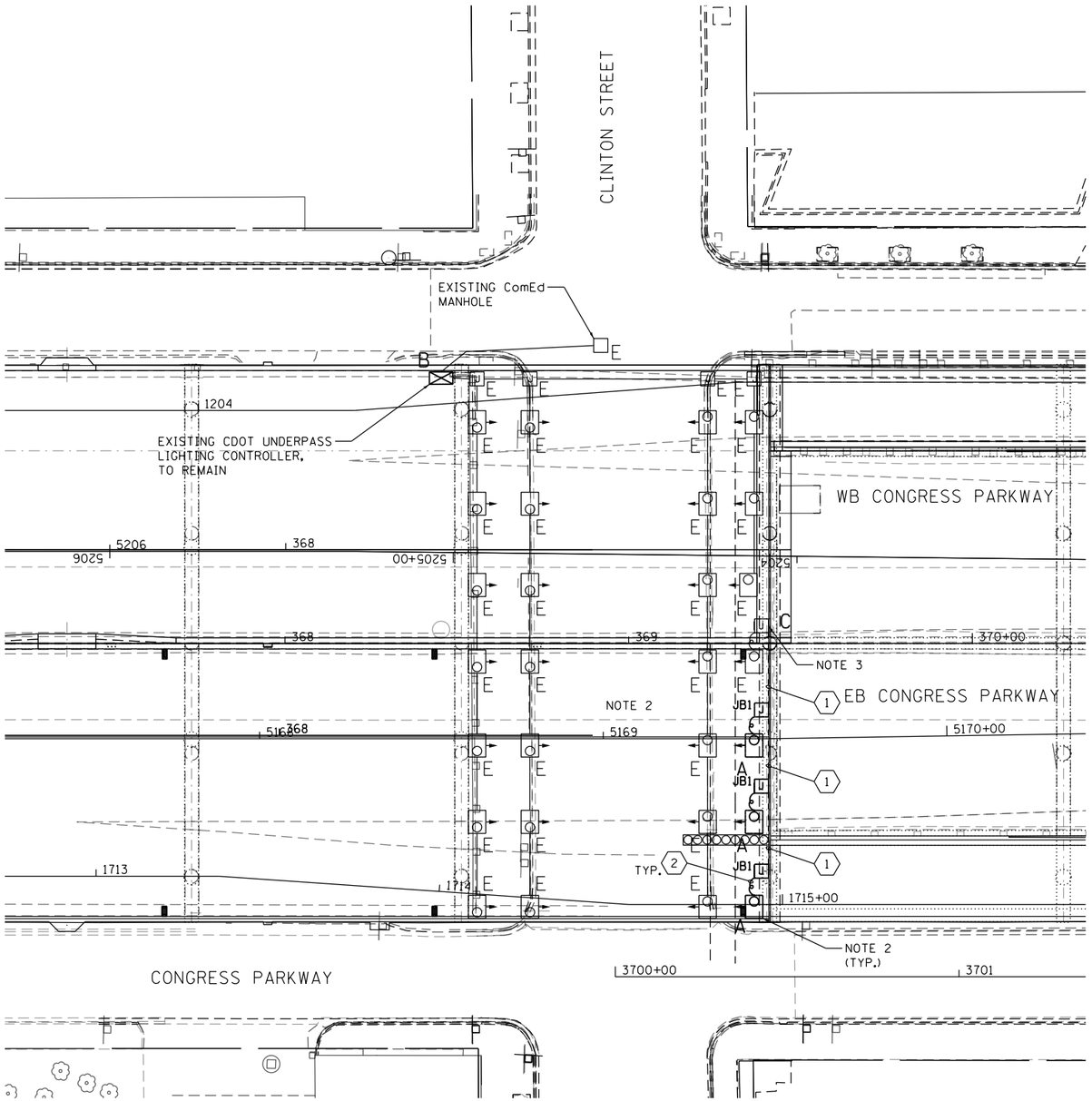

"A" REINSTALL EXISTING UNDERPASS LIGHTING UNIT ATTACHED TO PIER

"B" EXISTING UNDERPASS LIGHTING CONTROLLER TO REMAIN

"C" CONNECT CONDUIT TO EXISTING JUNCTION BOX

"E" EXISTING TO REMAIN

NOTES:

1. SEE THIS SHEET ELECTRICAL SYMBOLS AND ABBREVIATIONS.
2. ALL WORK INCLUDING, BUT NOT LIMITED TO, CONDUITS, CONDUIT WHIPS, CABLES, JUNCTION BOXES AND APPURTENANCES NECESSARY TO REINSTALL AND RECONNECT THE EXISTING LUMINAIRE TO THE EXISTING UNDERPASS SYSTEM WILL NOT BE PAID FOR SEPARATELY AND SHALL BE INCLUDED IN THE COST OF THE "RELOCATE EXISTING LUMINAIRE" PAY ITEM.
3. ROUTE NEW LIGHTING CIRCUIT CONDUITS AND CABLES TO THE LAST JUNCTION BOX AND LUMINAIRE UNAFFECTED BY THE CONSTRUCTION WORK.

N

0 20 40

SCALE: 1"=20'

Circle INTERCHANGE

DATE	REVISION

CITY OF CHICAGO

DEPARTMENT OF TRANSPORTATION
DIVISION OF ENGINEERING

CONSULTANT: AECOM
303 EAST WACKER DRIVE, SUITE 1400
CHICAGO, IL 60601-5276
PHONE: (312) 373-7700 FAX: (312) 373-6800

WORK ORDER NO. _____ DATE _____
COST ALLOCATION ACCOUNT _____
APPROPRIATION ACCOUNT { MATERIAL _____ LABOR _____

CLINTON STREET
FINAL UNDERPASS LIGHTING PLAN (CDOT)

CITY OF CHICAGO
DEPT. OF TRANSPORTATION
DIVISION OF ELECTRICAL OPERATIONS

DRAFTSMAN: CAM	CHIEF DRAFTSMAN:	ENGINEER: WDS
SUPERVISING ENGINEER: JPC	ELEC. DESIGN ENGR.	E-17
ENGINEER OF ELECTRICITY:		
GEN'L SUPT. OF ELECTRICITY:		
DEPUTY COMMISSIONER:		
SIZE: 22" | 34"	SCALE: 1" = 20'	DATE: 5/10/2017
DATE: 5/10/2017	DWG. NO.: 17 OF 17	
C.D.O.T. PROJECT NO.:		

NOTES:

1. REMOVE EXISTING SURVEILLANCE EQUIPMENT (SALVAGE) WHERE NOTED AND TURN OVER TO IDOT DISTRICT 1. THIS WORK WILL NOT BE PAID FOR SEPARATELY AND WILL BE INCLUDED IN THE COST OF THE "REMOVE EXISTING TRAFFIC SURVEILLANCE EQUIPMENT" PAY ITEM.
2. ALL EXISTING EQUIPMENT ATTACHED TO OR PART OF AN EXISTING STRUCTURE TO BE DEMOLISHED SHALL BE REMOVED AS PART OF THE STRUCTURAL REMOVAL PAY ITEMS, UNLESS OTHERWISE NOTED.
3. THE EXISTING FIBER OPTIC AND COMMUNICATIONS CABLES ARE TO BE REMOVED FROM THE CONDUIT AND REROUTED FROM THE JUNCTION BOX IN THE I-90/94 MEDIAN BARRIER WALL TO A NEW HANDHOLE BEHIND THE WALL (SEE SHEET ITS-03). WITHIN THE HANDHOLE, SPLICE EACH CABLE TO TEMPORARY AERIAL CABLES AND INSTALL THE CABLES TO THE EXISTING MCD CABINET/COMMUNICATIONS HUT (SEE SHEET ITS-03). DO NOT DISCONNECT AND REMOVE THE EXISTING CABLES UNTIL THE TEMPORARY CABLES ARE IN PLACE AND READY TO BE CONNECTED.

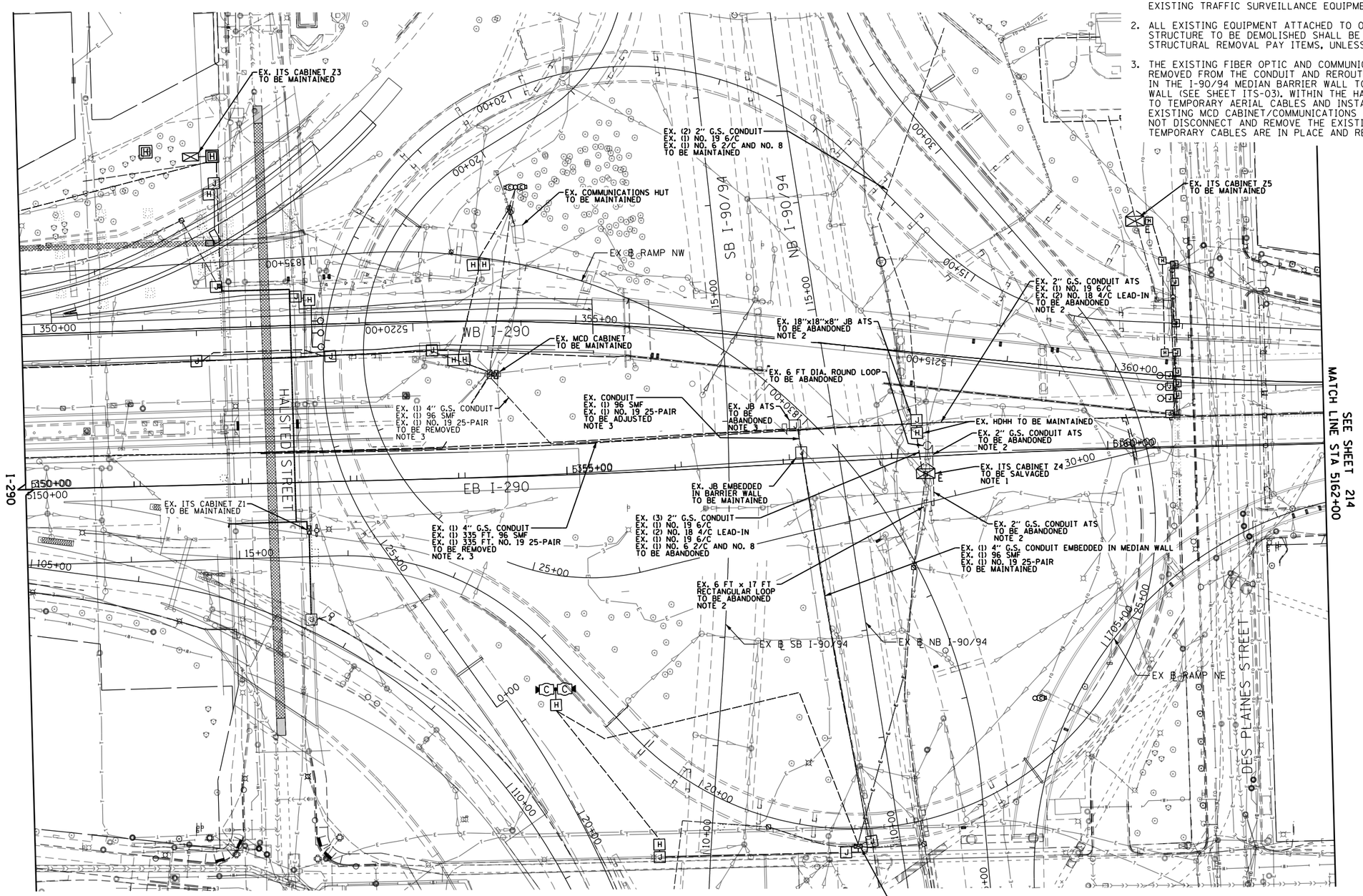

N

0 50 100

SCALE: 1"=50'

ITS-01

FILE PATH = pw:\\617479-PWINT.aecomonline.local:AECOM_DS02_NA\Documents\01 Americas\Transportation\60269938 Circle\Phase_II\000_CAD\006_Roadway\Sheets\60X75_Contract\D160X75-SHT-ITS-01

AECOM
303 EAST WACKER DRIVE, SUITE 1400
CHICAGO, IL 60601-5276
PHONE: (312) 373-7700 FAX: (312) 373-6800

D160X75-SHT-ITS-01	DESIGNED - MJL	REVISED -
USER NAME = myersc	DRAWN - CAM	REVISED -
PLOT SCALE = 100.0000 ' / in.	CHECKED - ME	REVISED -
PLOT DATE = 5/4/2017	DATE - 5/10/2017	REVISED -

STATE OF ILLINOIS
DEPARTMENT OF TRANSPORTATION

EXISTING/MAINTAINING ITS PLAN
EB I-290 OVER I-90/94 AND EB CONGRESS PARKWAY

SCALE: 1"=50' | SHEET 1 OF 9 SHEETS | STA. 5150+00 TO STA. 5162+00

F.A.I. RTE.	SECTION	COUNTY	TOTAL SHEETS	SHEET NO.
90/94/290	2014-001 R&B	COOK	696	213
		CONTRACT NO. 60X75		
		ILLINOIS FED. AID PROJECT		

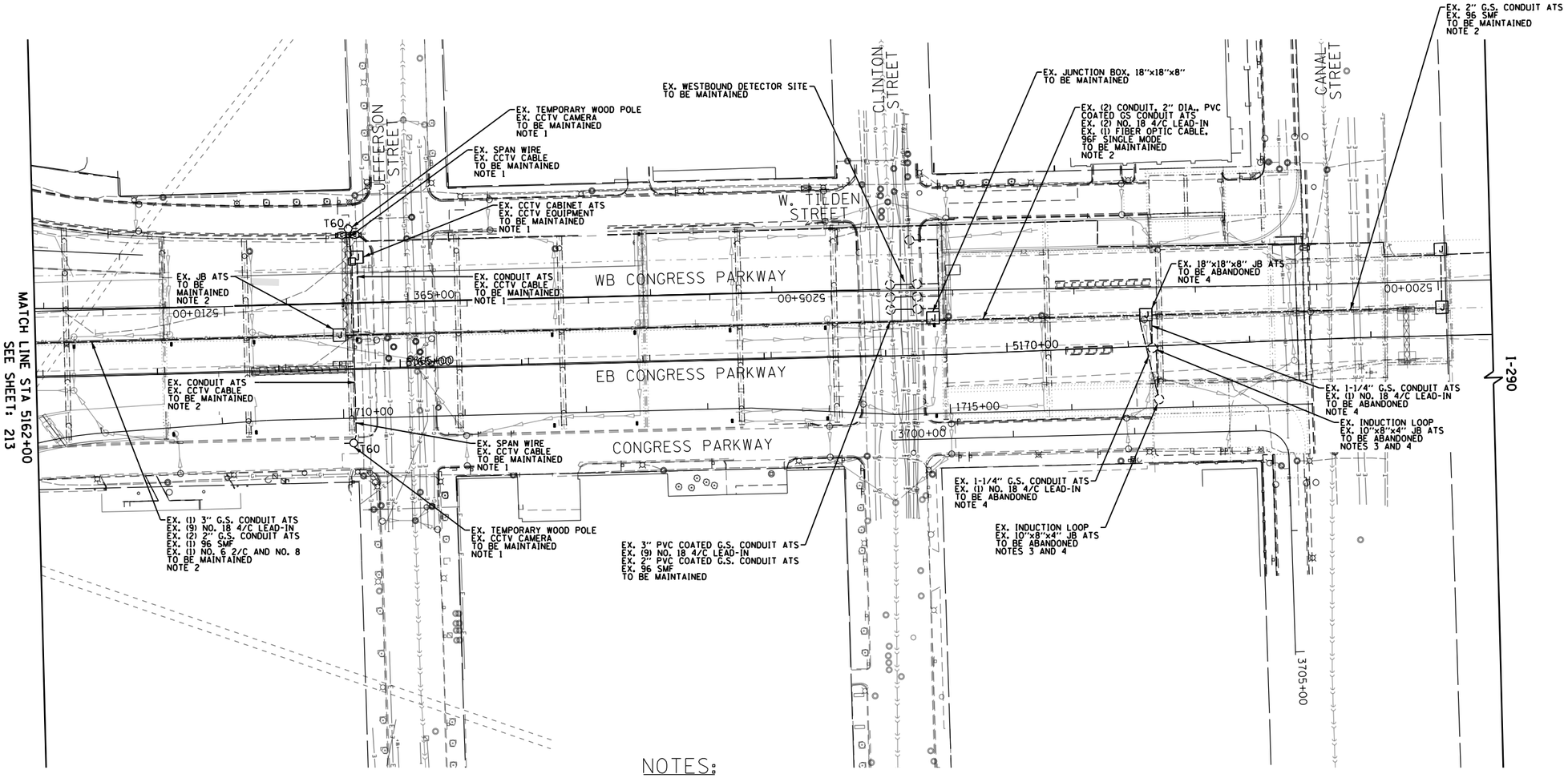

NOTES:

1. THE EXISTING CCTV CAMERAS AND CABLES ATTACHED TO TEMPORARY WOOD POLES ARE TO BE MAINTAINED. CONDUIT AND CABLES ATTACHED TO THE EXISTING PIER ARE TO BE RELOCATED AS NECESSARY TO MINIMIZE DOWNTIME OF THE SOUTH CAMERA. THIS WORK SHALL BE INCLUDED IN THE COST OF MAINTAINING ITS DURING CONSTRUCTION.

2. EXISTING CONDUITS AND CABLES ATTACHED TO THE STRUCTURE IN THE MEDIAN ARE INSTALLED UNDER CONTRACT 60X78 AND ARE TO BE MAINTAINED. THESE APPURTENANCES ARE ATTACHED TO THE WB I-290 STRUCTURE.

3. EXISTING INDUCTION LOOPS IN THE EB I-290 MAINLINE AND EXIT RAMP TO CANAL STREET ARE CONNECTED TO NEW LOOPS IN WB I-290 INSTALLED UNDER CONTRACT 60X78. THE EB LOOPS ARE TO BE ABANDONED AND REPLACED WITH NEW INFRASTRUCTURE (SEE SHEET ITS-05).

4. ALL EXISTING EQUIPMENT ATTACHED TO OR PART OF AN EXISTING STRUCTURE TO BE DEMOLISHED SHALL BE REMOVED AS PART OF THE STRUCTURAL REMOVAL PAY ITEMS, UNLESS OTHERWISE NOTED.

N

0 50 100

SCALE: 1"=50'

ITS-02

FILE PATH = pw:\\617479-PWINT.aecomonline.local:AECOM_DS02_NA\Documents\01 Americas\Transportation\60269938 Circle\Phase_II\000.CAD\006.Roadway\Sheets\60X75.Contract\D160X75-SHT-ITS-02

AECOM
303 EAST WACKER DRIVE, SUITE 1400
CHICAGO, IL 60601-5276
PHONE: (312) 373-7700 FAX: (312) 373-6800

D160X75-SHT-ITS-02	DESIGNED - MJL	REVISED -	
USER NAME = myersc	DRAWN - CAM	REVISED -	
PLOT SCALE = 100.0000 ' / in.	CHECKED - ME	REVISED -	
PLOT DATE = 5/4/2017	DATE - 5/10/2017	REVISED -	

STATE OF ILLINOIS
DEPARTMENT OF TRANSPORTATION

EXISTING/MAINTAINING ITS PLAN
EB I-290 OVER I-90/94 AND EB CONGRESS PARKWAY

SCALE: 1"=50' | SHEET 2 OF 9 SHEETS | STA.5162+00 TO STA.5174+00

F.A.I. RTE.	SECTION	COUNTY	TOTAL SHEETS	SHEET NO.
90/94/290	2014-001 R&B	COOK	696	214
		CONTRACT NO. 60X75		
		ILLINOIS FED. AID PROJECT		

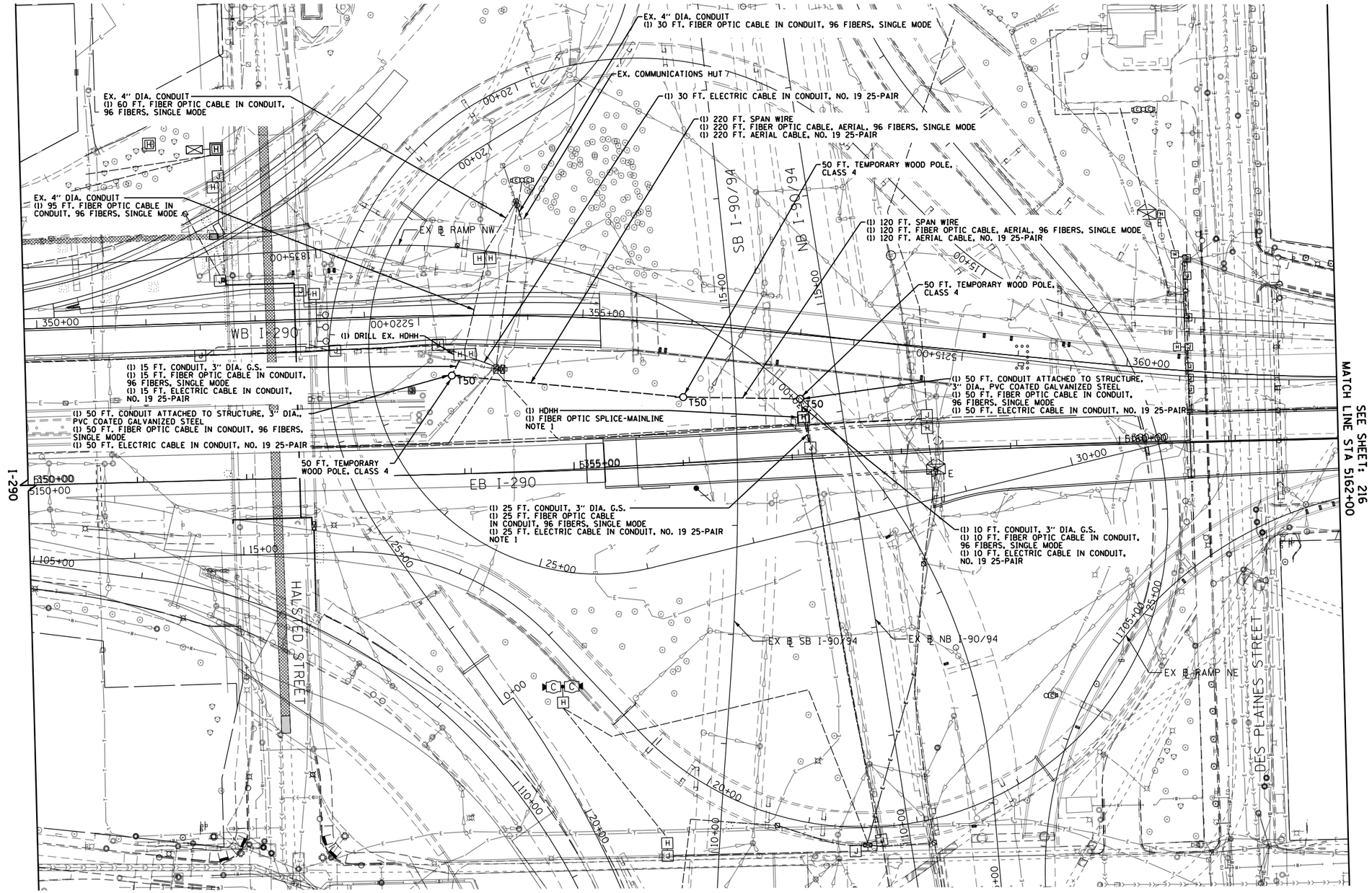

NOTES:

1. THE EXISTING FIBER OPTIC AND COMMUNICATIONS CABLES ARE TO BE PULLED BACK TO THE JUNCTION BOX IN THE I-90/94 MEDIAN BARRIER WALL AND REROUTED TO A NEW HANDHOLE BEHIND THE WALL AS SHOWN. SPLICE THE EXISTING CABLES TO TEMPORARY AERIAL CABLES IN THE HANDHOLE AND INSTALL THE AERIAL CABLES TO THE EXISTING COMMUNICATIONS HUT AS SHOWN. DO NOT DISCONNECT AND REMOVE THE EXISTING CABLES UNTIL THE TEMPORARY CABLES ARE IN PLACE AND READY TO BE CONNECTED.

N

0 50 100

SCALE: 1"=50'

ITS-03

FILE PATH = pw:\\61479-PWINT.aecomonline.local:AECOM.DS02.NA\Documents\01 Americas\Transportation\60269938 Circle\Phase II\000.CAD\006.Roadway\Sheets\60X75.Contract\D160X75-SHT-ITS-03

AECOM
303 EAST WACKER DRIVE, SUITE 1400
CHICAGO, IL 60601-5276
PHONE: (312) 373-7700 FAX: (312) 373-6800

D160X75-SHT-ITS-03	DESIGNED - MJL	REVISED -	
USER NAME = myersc	DRAWN - CAM	REVISED -	
PLOT SCALE = 100.0000 ' / in.	CHECKED - ME	REVISED -	
PLOT DATE = 5/4/2017	DATE - 5/10/2017	REVISED -	

STATE OF ILLINOIS
DEPARTMENT OF TRANSPORTATION

MAINTAINING ITS PLAN
EB I-290 OVER I-90/94 AND EB CONGRESS PARKWAY

SCALE: 1"=50' | SHEET 3 OF 9 SHEETS | STA. 5150+00 TO STA. 5162+00

F.A.I. RTE.	SECTION	COUNTY	TOTAL SHEETS	SHEET NO.
90/94/290	2014-001 R&B	COOK	696	215
		CONTRACT NO. 60X75		
	ILLINOIS	FED. AID PROJECT		

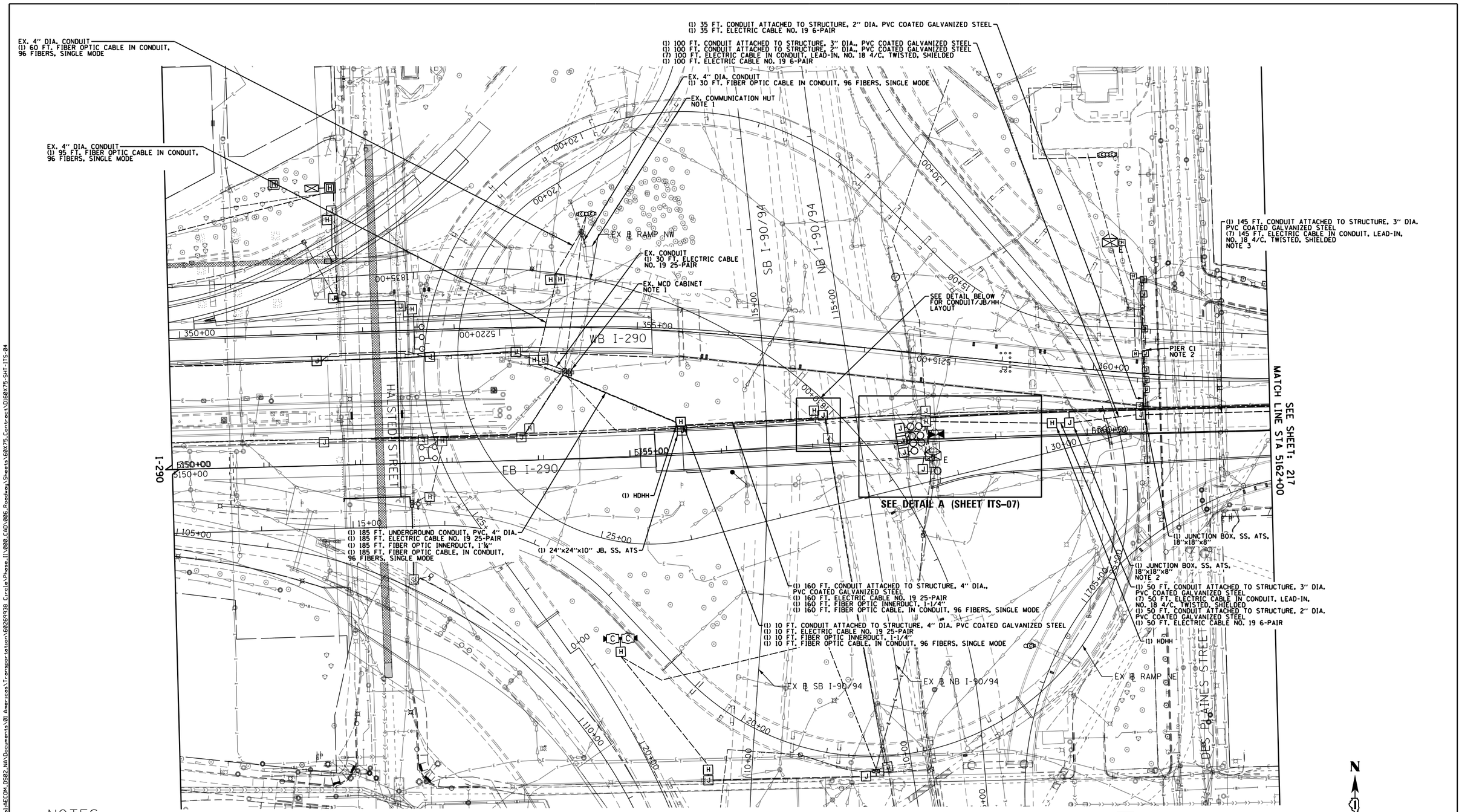

NOTES:

1. NEW FIBER OPTIC CABLE IS TO BE CONNECTED TO THE COMMUNICATIONS HUT AND NEW COMMUNICATION CABLE IS TO BE CONNECTED TO THE MCD CABINET AND INSTALLED TO THE HANDHOLE BEHIND THE NORTHBOUND MAINLINE MEDIAN BARRIER WALL (SEE SHEET ITS-03). REMOVE THE TEMPORARY AERIAL FIBER OPTIC ANDCOMMUNICATIONS CABLES (SEE SHEET ITS-03) AND SPLICE THE NEW CABLES TO THE EXISTING CABLES IN THE HANDHOLE. DO NOT DISCONNECT AND REMOVE THE EXISTING TEMPORARY CABLES UNTIL THE NEW CABLES ARE IN PLACE AND READY TO BE CONNECTED.
2. SEE DETAIL B ON SHEET ITS-08 FOR CONFIGURATION OF JUNCTION BOXES AND CONDUITS.
3. THE 3" DIA. CONDUIT ATTACHED TO STRUCTURE WITH LOOP CABLES FROM CLINTON STREET CONTINUES TO THE JUNCTION BOX ATTACHED TO STRUCTURE AT PIER C3.
4. THE LOCATIONS OF THE ITS EQUIPMENT SHOWN ON THE PLAN ARE APPROXIMATIONS. THE FINAL INSTALLATION LOCATIONS OF THE ITS EQUIPMENT SHALL BE STAKED IN THE FIELD ADN APPROVED BY THE ENGINEER PRIOR TO BEGINNING ANY WORK TO AVOID CONFLICTS WITH EXISTING/PROPOSED UTILITIES AND WORK PERFORMED BY OTHER DISCIPLINES.

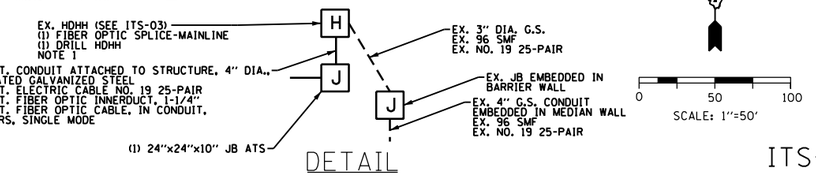

DETAIL

ITS-04

AECOM 303 EAST WACKER DRIVE, SUITE 1400 CHICAGO, IL 60601-5276 PHONE: (312) 373-7700 FAX: (312) 373-6800	D160X75-SHT-ITS-04	DESIGNED - MJL	REVISED -	STATE OF ILLINOIS DEPARTMENT OF TRANSPORTATION	PROPOSED ITS PLAN EB I-290 OVER I-90/94 AND EB CONGRESS PARKWAY
	USER NAME = myersc	DRAWN - CAM	REVISED -		
	PLOT SCALE = 100.0000 ' / in.	CHECKED - ME	REVISED -		
	PLOT DATE = 5/4/2017	DATE - 5/10/2017	REVISED -		SCALE: 1"=50' SHEET 4 OF 9 SHEETS STA. 5150+00 TO STA. 5162+00

F.A.I. RTE.	SECTION	COUNTY	TOTAL SHEETS	SHEET NO.
90/94/290	2014-001 R&B	COOK	696	216
		CONTRACT NO. 60X75		
		ILLINOIS FED. AID PROJECT		

FILE PATH = pw:\\61479-PWINT.aecomonline.local:AECOM_DS02_NA\Documents\01 Americas\Transportation\60269938 Circle\Phase_II\000_CAD\006_Roadway\Sheets\60X75_Contract\D160X75-SHT-ITS-04

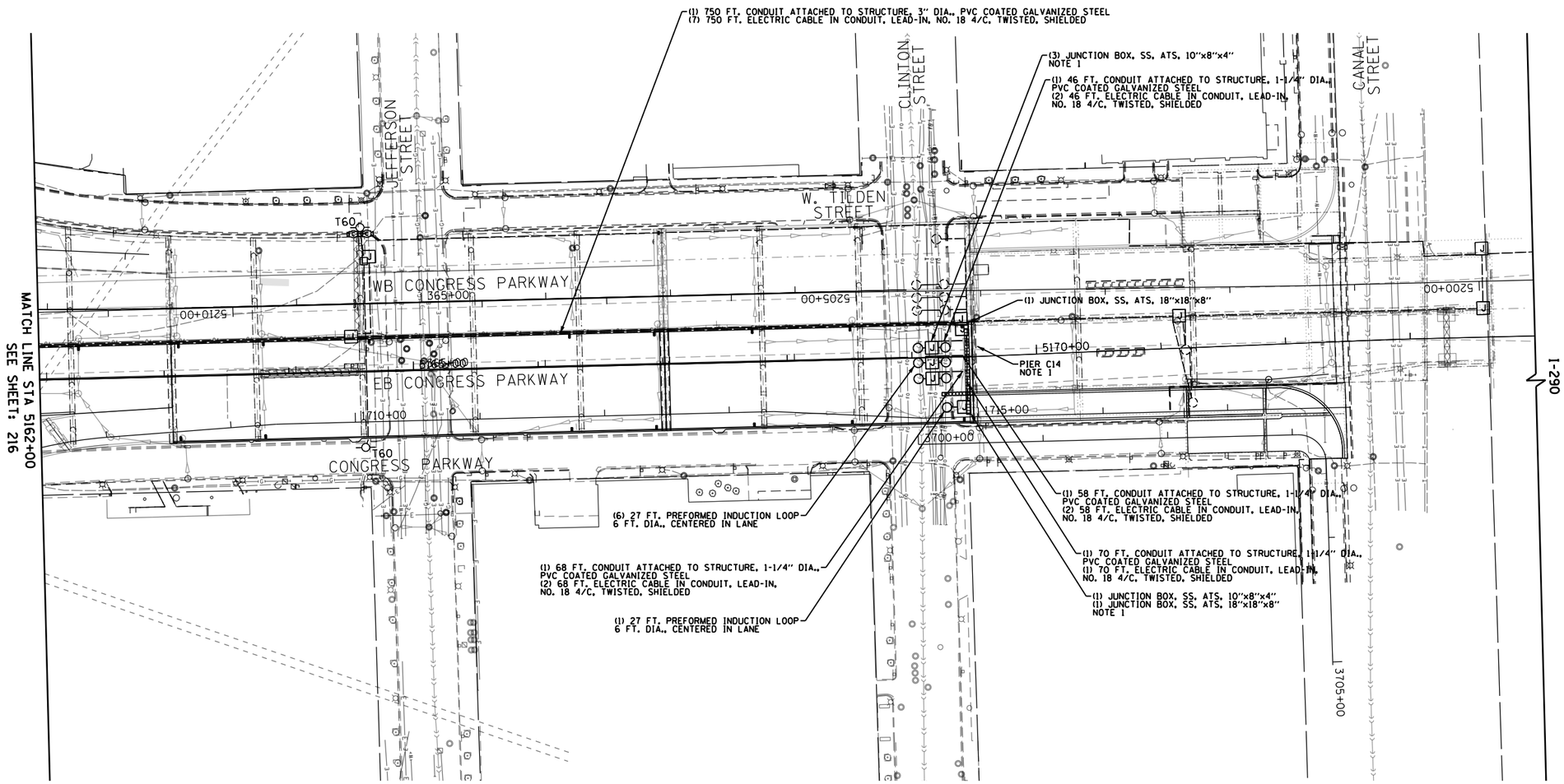

NOTES:

1. SEE DETAIL C ON SHEET ITS-09 FOR ELEVATION VIEW.

N

0 50 100

SCALE: 1"=50'

ITS-05

FILE PATH = pw:\\61479-PWINT.aecomonline.local:AECOM.DS02.NA\Documents\01 Americas\Transportation\60269938 Circle\Phase II\000 CAD\006 Roadway\Sheets\60X75-SHT-ITS-05

AECOM
303 EAST WACKER DRIVE, SUITE 1400
CHICAGO, IL 60601-5276
PHONE: (312) 373-7700 FAX: (312) 373-6800

D160X75-SHT-ITS-05	DESIGNED - MJL	REVISED -	
USER NAME = myersc	DRAWN - CAM	REVISED -	
PLOT SCALE = 100.0000 ' / in.	CHECKED - ME	REVISED -	
PLOT DATE = 5/4/2017	DATE - 5/10/2017	REVISED -	

STATE OF ILLINOIS
DEPARTMENT OF TRANSPORTATION

PROPOSED ITS PLAN
EB I-290 OVER I-90/94 AND EB CONGRESS PARKWAY

SCALE: 1"=50' | SHEET 5 OF 9 SHEETS | STA.5162+00 TO STA.5174+00

F.A.I. RTE.	SECTION	COUNTY	TOTAL SHEETS	SHEET NO.
90/94/290	2014-001 R&B	COOK	696	217
		CONTRACT NO. 60X75		
	ILLINOIS	FED. AID PROJECT		

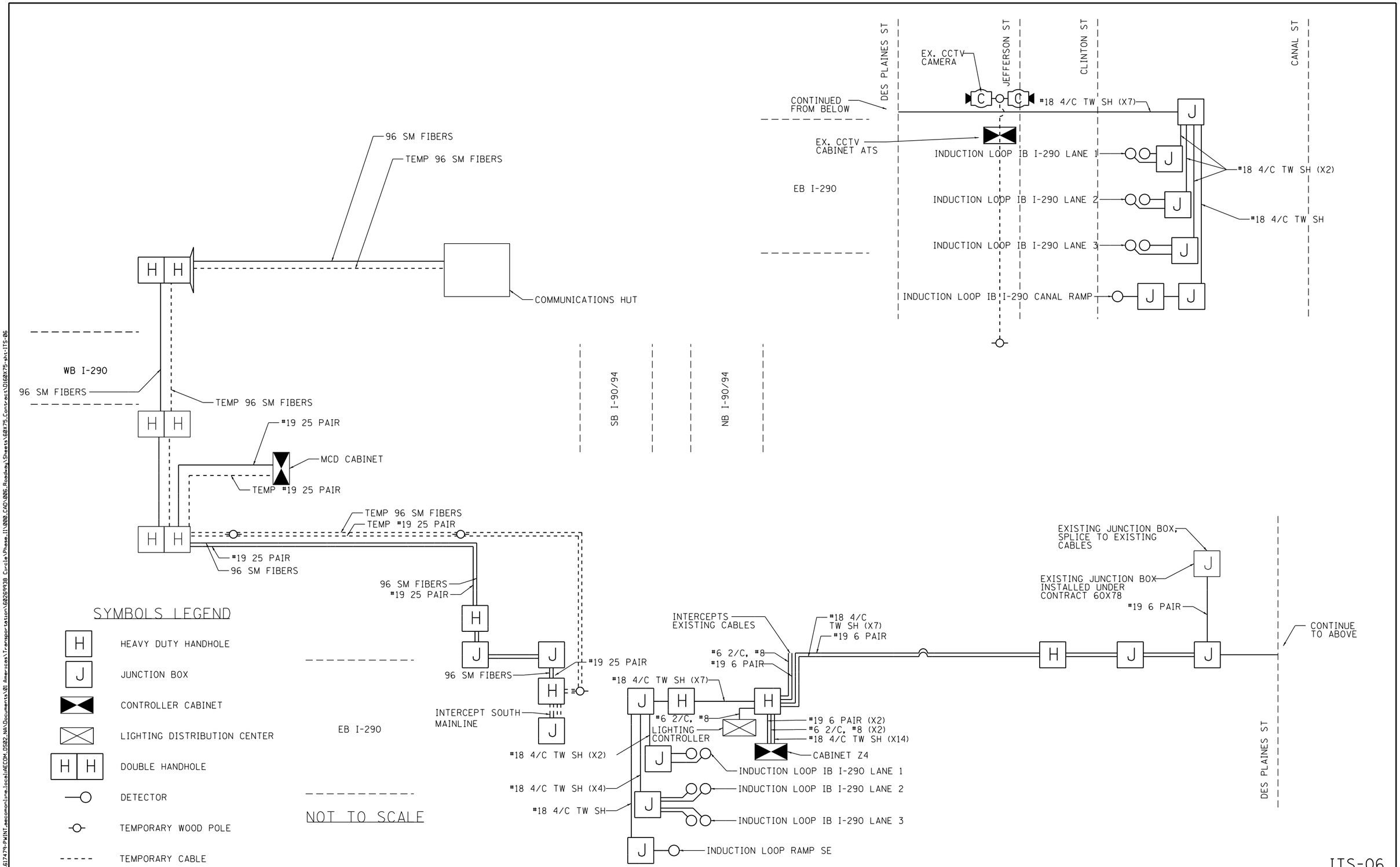

FILE PATH = pw:\\61479-PWINT.aecomonline.local:AECOM.DS02.NA\Documents\01 Americas\Transportation\60269938 Circle\Phase II\000.CAD\006.Roadway\Sheets\60X75.Contract\D160X75-sht-ITS-06

AECOM
303 EAST WACKER DRIVE, SUITE 1400
CHICAGO, IL 60601-5276
PHONE: (312) 373-7700 FAX: (312) 373-6800

D160X75-sht-ITS-06	DESIGNED - MJL	REVISED -	
USER NAME = myersc	DRAWN - CAM	REVISED -	
PLOT SCALE = 1.6000 ' / in.	CHECKED - ME	REVISED -	
PLOT DATE = 5/4/2017	DATE - 5/10/2017	REVISED -	

STATE OF ILLINOIS
DEPARTMENT OF TRANSPORTATION

WIRING DIAGRAM

SCALE: N.T.S. | SHEET 6 OF 9 SHEETS | STA. | TO STA.

F.A.I. RTE.	SECTION	COUNTY	TOTAL SHEETS	SHEET NO.
90/94/290	2014-001 R&B	COOK	696	218
		CONTRACT NO. 60X75		
	ILLINOIS	FED. AID PROJECT		

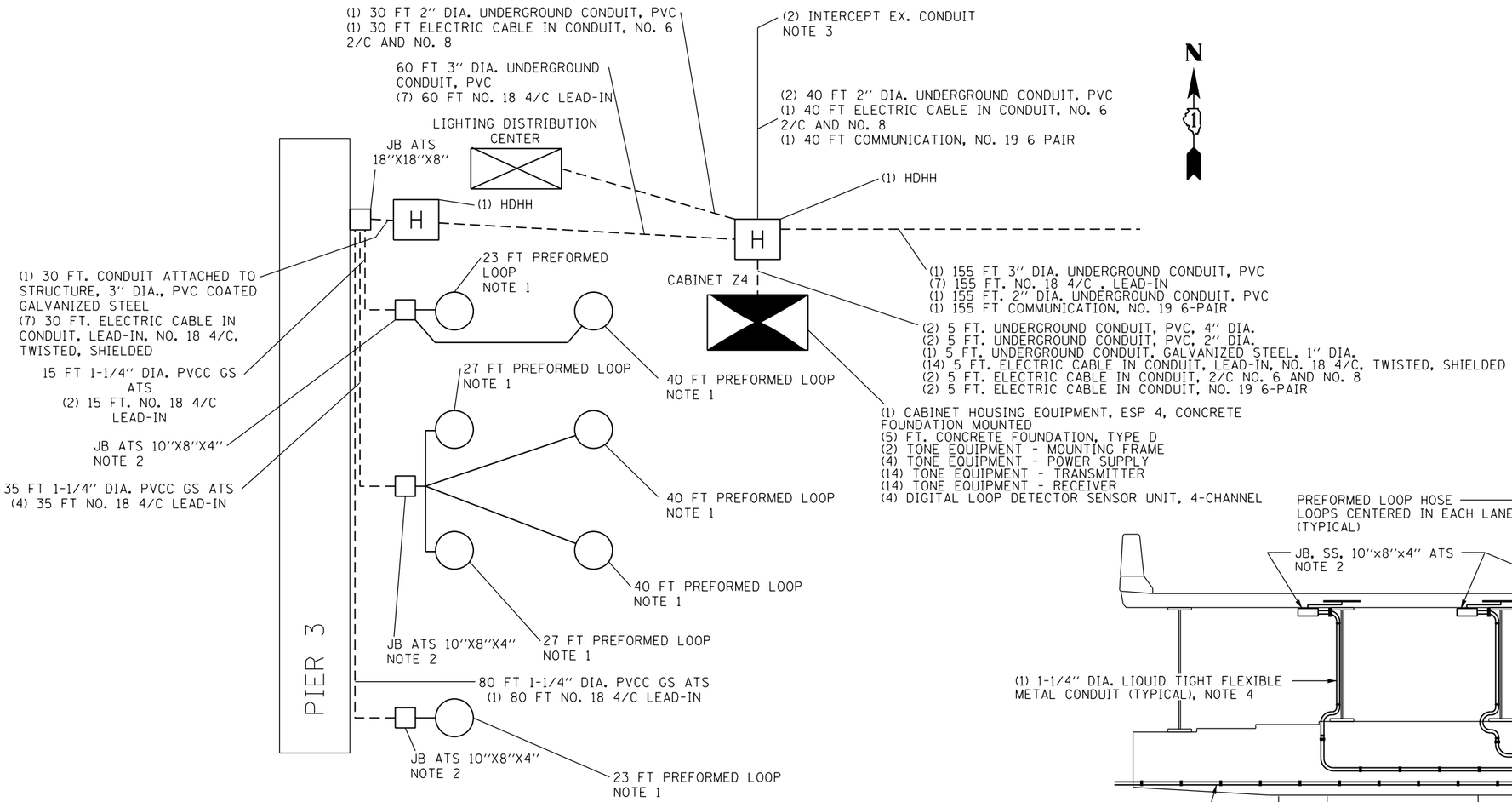

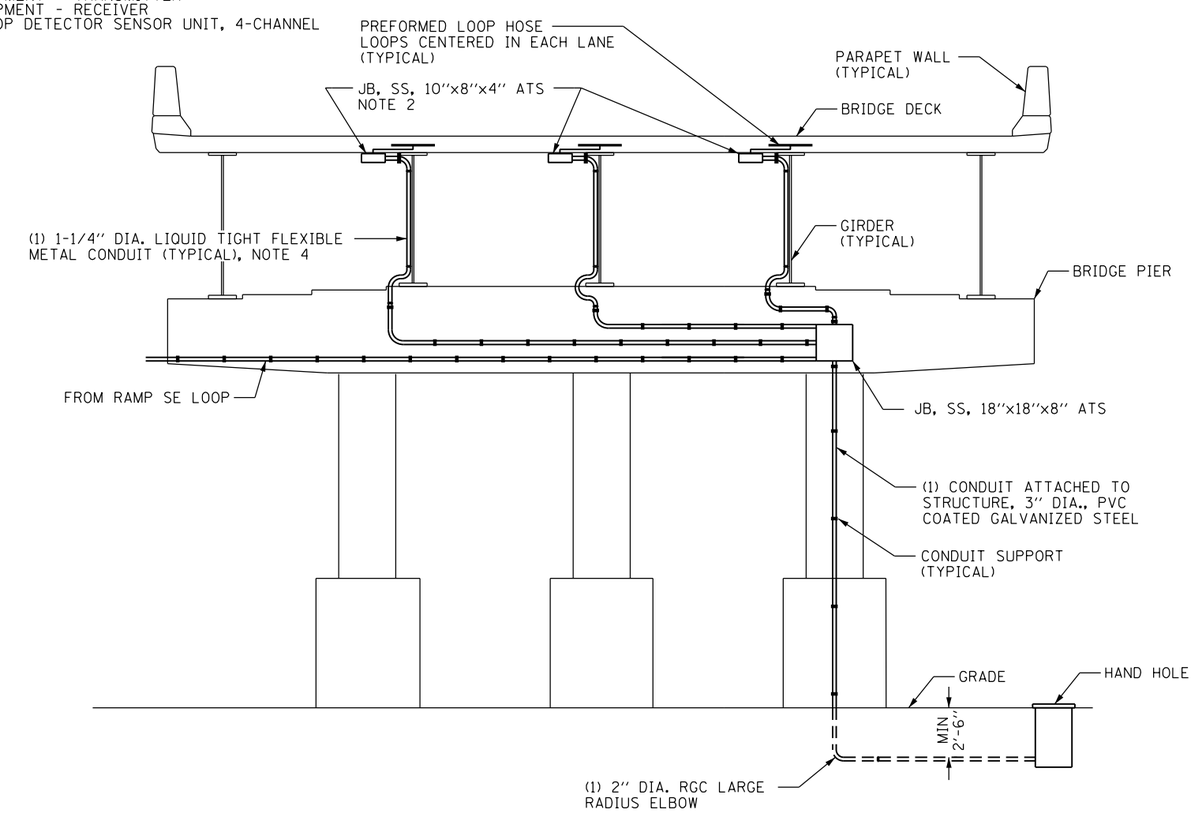

DETAIL A – CONDUIT ATTACHED TO PIER INSTALLATION DETAIL

PIER C3
LOOKING WEST

NOTES:

1. LOOPS ARE TO BE CENTERED IN EACH LANE (3 MAINLINE LANES AND 1 RAMP LANE).
2. PREFORMED LOOP TUBES GO INTO THE 10"X8"X4" JUNCTION BOXES MOUNTED BELOW THE DECK. THE LOOP WIRES ARE SPLICED TO THE NO. 18 4/C, LEAD-IN CABLES IN THE JUNCTION BOX.
3. THE (2) 2" CONDUITS TO BE INTERCEPTED ARE FROM THE HANDHOLE ON THE SOUTH SIDE OF VAN BUREN STREET WHICH IS CONNECTED TO THE HANDHOLE ON THE NORTH SIDE NEXT TO THE CONCRETE FOUNDATION FOR THE PROPOSED ITS CABINET Z6/7 (SEE SHEET ITS-01). PULL THE EXISTING CABLES BACK TO THE HANDHOLE NEAR VAN BUREN AND THEN REINSTALL WITH ADDITIONAL LENGTH TO NEW CABINET Z4 WHEN THE NEW CONDUIT IS IN PLACE.
4. INCLUDED IN THE COST OF THE 1-1/4" DIAMETER PVC COATED GALVANIZED STEEL CONDUIT, ATTACHED TO STRUCTURE.

ITS-07

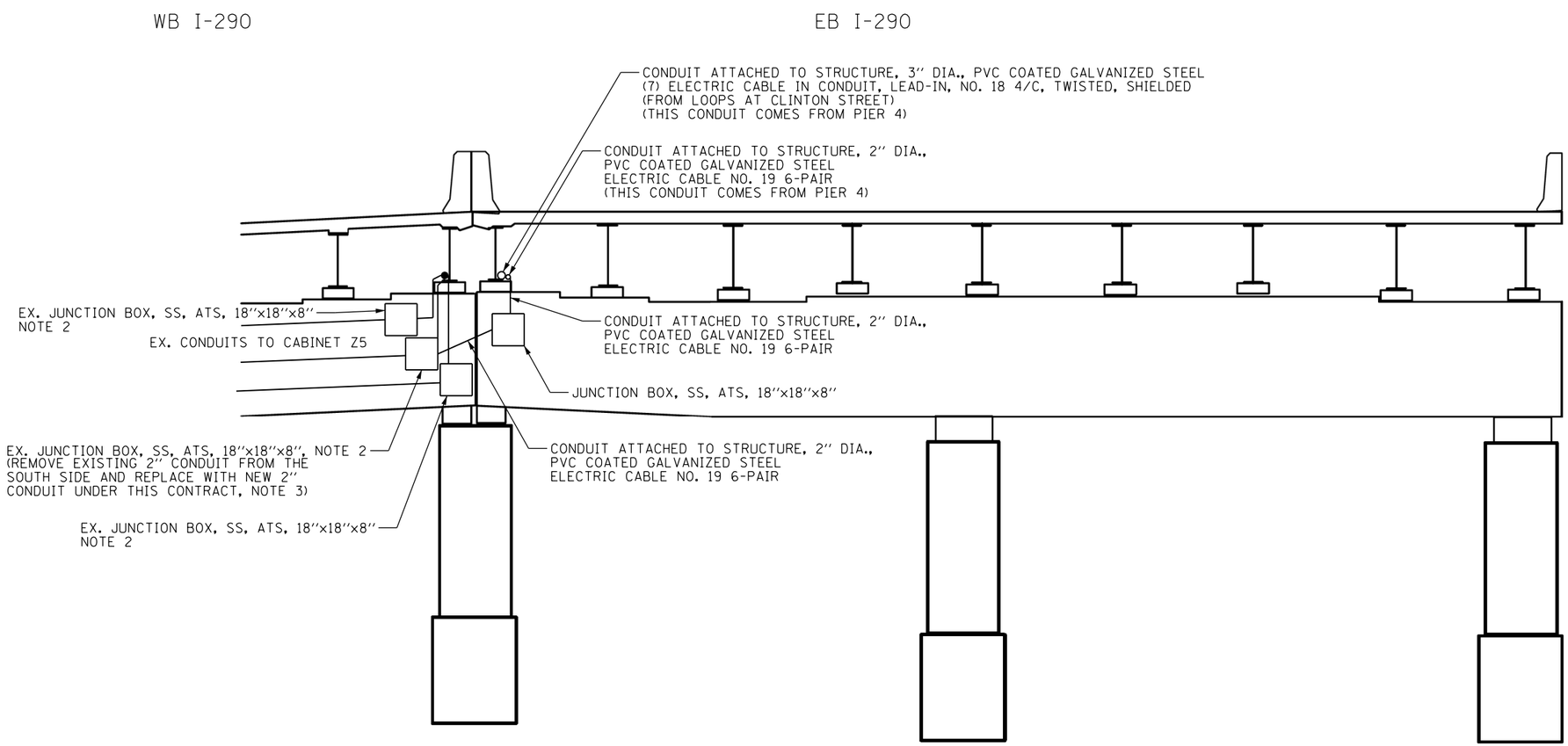

PIER C1

(LOOKING EAST)

NOTES:

1. SEE SHEET ITS-04 FOR QUANTITIES.
2. INSTALLED UNDER CONTRACT 60X78
3. EXISTING EQUIPMENT TO BE REMOVED THAT IS ATTACHED TO AN EXISTING STRUCUTRE SHALL BE INCLUDED AS PART OF THE STRUCTURAL REMOVAL PAY ITEMS, UNLESS OTHERWISE NOTED.

ITS-08

FILE PATH = pw:\\617479-PWINT.aecomonline.local:AECOM_DS02_NA\Documents\01 Americas\Transportation\60269938 Circle\Phase II\000_CAD\006.Roadway\Sheets\60X75_Contract\D160X75-sht-ITS-08

AECOM
303 EAST WACKER DRIVE, SUITE 1400
CHICAGO, IL 60601-5276
PHONE: (312) 373-7700 FAX: (312) 373-6800

D160X75-sht-ITS-08	DESIGNED - MJL	REVISED -	
USER NAME = myersc	DRAWN - CAM	REVISED -	
PLOT SCALE = 1.6000 ' / in.	CHECKED - ME	REVISED -	
PLOT DATE = 5/4/2017	DATE - 5/10/2017	REVISED -	

STATE OF ILLINOIS
DEPARTMENT OF TRANSPORTATION

ITS DETAILS – DETAIL B
EB I-290 OVER I-90/94 AND EB CONGRESS PARKWAY

SCALE: N.T.S. | SHEET 8 OF 9 SHEETS | STA. TO STA.

F.A.I. RTE.	SECTION	COUNTY	TOTAL SHEETS	SHEET NO.
90/94/290	2014-001 R&B	COOK	696	220
		CONTRACT NO. 60X75		
	ILLINOIS	FED. AID PROJECT		

NOTES:

1. PREFORMED LOOP TUBES GO INTO THE 10"X8"X4" JUNCTION BOXES MOUNTED BELOW THE DECK. THE LOOP WIRES ARE SPLICED TO THE NO. 18 4/C LEAD-IN CABLES IN THE JUNCTION BOX.

2. SEE SHEET ITS-05 FOR QUANTITIES.

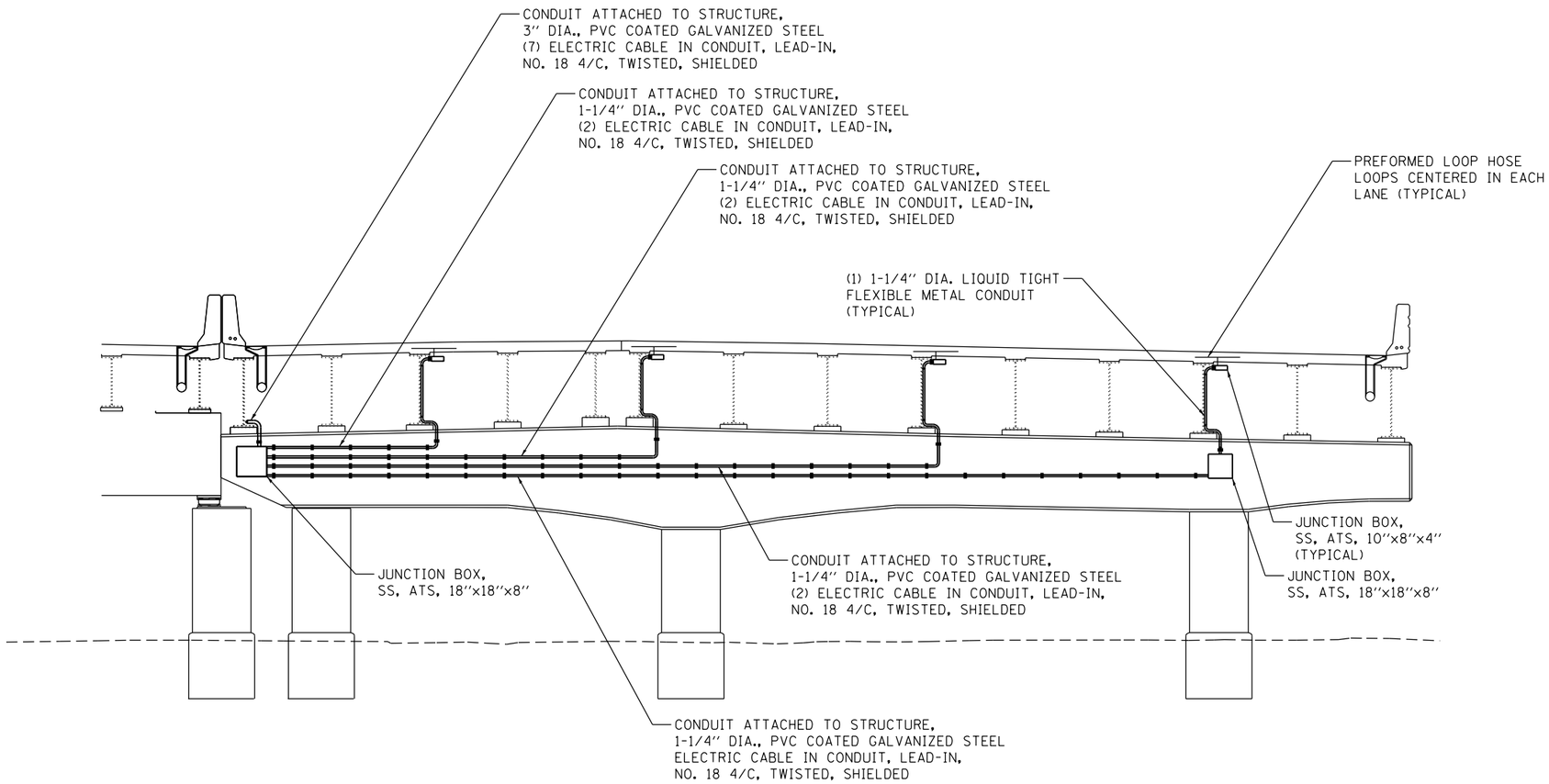

PIER C14
(LOOKING EAST)

ITS-09

AECOM
303 EAST WACKER DRIVE, SUITE 1400
CHICAGO, IL 60601-5276
PHONE: (312) 373-7700 FAX: (312) 373-6800

D160X75-sht-ITS-09	DESIGNED - MJL	REVISED -	
USER NAME = myersc	DRAWN - CAM	REVISED -	
PLOT SCALE = 1.6000 ' / in.	CHECKED - ME	REVISED -	
PLOT DATE = 5/4/2017	DATE - 5/10/2017	REVISED -	

STATE OF ILLINOIS
DEPARTMENT OF TRANSPORTATION

ITS DETAILS - DETAIL C
EB I-290 OVER I-90/94 AND EB CONGRESS PARKWAY

SCALE: N.T.S. | SHEET 9 OF 9 SHEETS | STA. TO STA.

F.A.I. RTE.	SECTION	COUNTY	TOTAL SHEETS	SHEET NO.
90/94/290	2014-001 R&B	COOK	696	221
		CONTRACT NO. 60X75		
	ILLINOIS	FED. AID PROJECT		

FILE PATH = pw:\\617479-PWINT.aecomonline.local:AECOM_DS02_NA\Documents\01 Americas\Transportation\60269938 Circle\Phase II\000_CAD\006.Roadway\Sheets\60X75_Contract\D160X75-sht-ITS-09

Bench Mark: Square cut at center of door entrance to 707 W. Harrison St. South side of Harrison St. ±90' west of west line of Des Plaines. Elevation 597.47.
A t cut in the SE anchor bolt at the 11th street light N. of Roosevelt on the W. side of Halsted. Elev. = 594.06

Existing Structure: S.N. 016-1029 was built in 1958 and carries EB I-290 traffic over I-90/94. The existing seven-span structure has an overall length of approx. 502'-0" and out-to-out deck width varies from 57'-6" to 79'-10". The existing superstructure consists of simple span concrete tee (Span 1 only) and wide-flange beams with 7½" thick concrete deck and 1½" overlay. The existing substructure consists of reinforced concrete abutment and multi-column piers. Substructure units are supported on caissons. Existing structure to be removed and replaced. Traffic to be maintained utilizing stage construction.

No salvage.

DESIGN SPECIFICATIONS

2014 AASHTO LRFD Bridge Design Specifications
7th Edition with 2015 & 2016 Interim Revisions

LOADING HL-93

Allow 50#/sq. ft. for future wearing surface.

DESIGN STRESSES

FIELD UNITS

f'c = 3,500 psi
f'c = 4,000 psi (Superstructure)
fy = 60,000 psi (Reinforcement)
fy = 50,000 psi (M270 Grade 50)

SEISMIC DATA

Seismic Performance Zone (SPZ) = 1
Design Spectral Acceleration at 1.0 sec. (S_{D1}) = 0.085g
Design Spectral Acceleration at 0.2 sec. (S_{DS}) = 0.144g
Soil Site Class = D

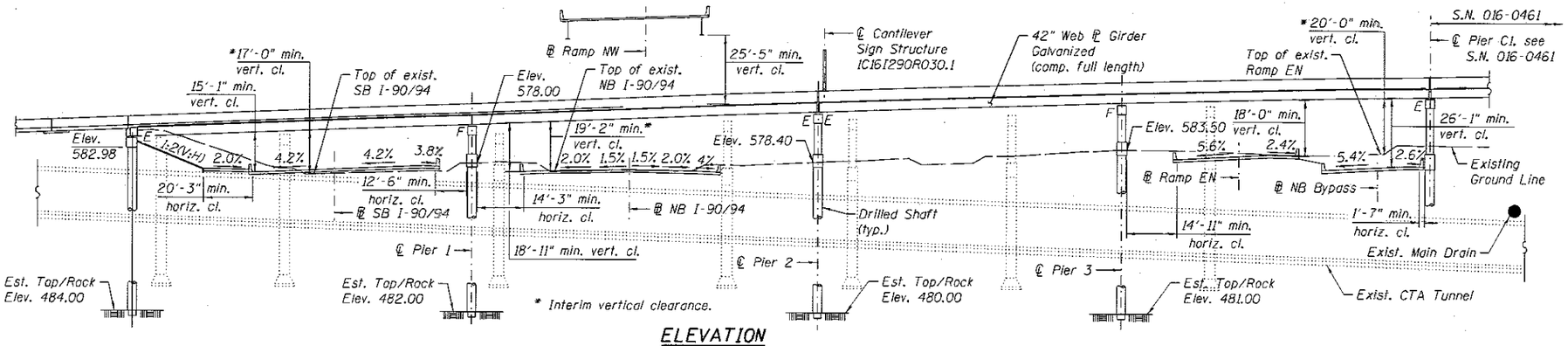

ELEVATION

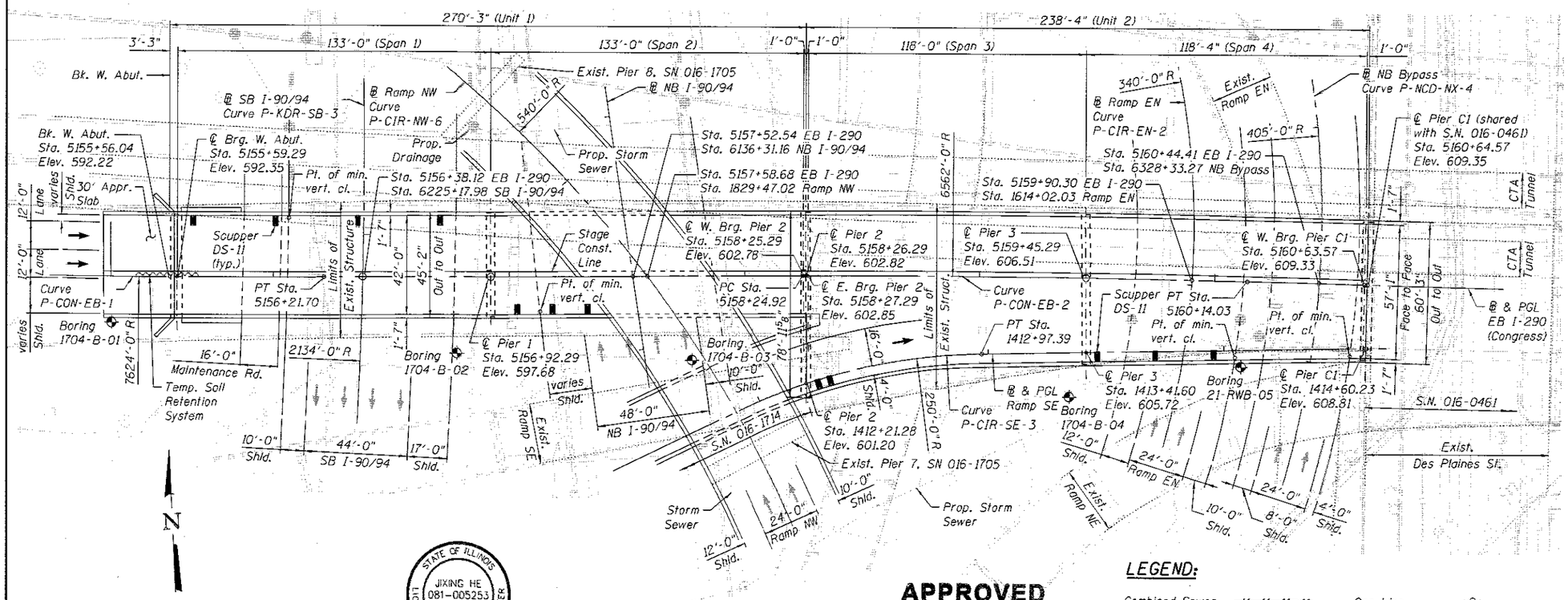

PLAN

DS-11 SCUPPER LOCATION

Station	Offset
5155+65.95	26.0' LT
5156+00.95	26.0' LT
5156+35.95	26.0' LT
5156+70.95	26.0' LT
5157+03.29	16.0' RT
5157+18.29	16.0' RT
5157+33.29	16.0' RT
5158+32.29	47.8' RT
5158+37.29	46.3' RT
5159+50.65	35.3' RT
5159+75.36	33.0' RT
5160+00.35	32.1' RT

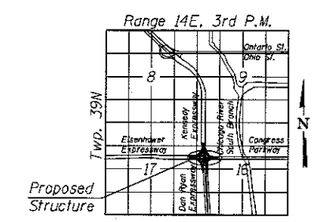

LOCATION SKETCH

STATE OF ILLINOIS
JIXING HE
081-005253
CHICAGO
IL
LICENSED STRUCTURAL ENGINEER

5/8/2017
LICENSE EXPIRES: 11/30/2018

APPROVED
For Structural Adequacy Only

Engineer of Bridges & Structures

LEGEND:

Combined Sewer		Gas Line	—G—
Electric	—E—	Fire Hydrant	
Fiber Optic	—FO—	Light Pole	
Storm Sewer		Soil Boring	
Water Line	—W—		

GENERAL PLAN & ELEVATION
EB I-290 (CONGRESS)
OVER I-90/94
F.A.I. RTE. 90/94/290
SECTION 2014-001 R&B
COOK COUNTY
STATION 5156+92.29
STRUCTURE NO. 016-1704

AECOM

USER NAME = floresg	DESIGNED - JXH	REVISED	
	CHECKED - ATB	REVISED	
PLOT SCALE = N.T.S.	DRAWN - JXH	REVISED	
PLOT DATE = 6/28/2017	CHECKED - ATB	REVISED	

STATE OF ILLINOIS
DEPARTMENT OF TRANSPORTATION

GENERAL PLAN & ELEVATION
STRUCTURE NO. 016-1704
SHEET NO. S1-01 OF S1-52 SHEETS

F.A.I. RTE.	SECTION	COUNTY	TOTAL SHEETS	SHEET NO.
90/94/290	2014-001 R&B	COOK	696	222
		CONTRACT NO. 60X75		
		ILLINOIS FED. AID PROJECT		

016I704-60X75-S01.DPE.dgn

GENERAL NOTES

1. Fasteners shall be ASTM A325 Type 1, hot-dipped galvanized bolts. Bolts $^{7}/_{8}$" ϕ, holes $^{15}/_{16}$" ϕ, unless otherwise noted.
2. Calculated weight of structural steel = 1,036,720 lbs.
3. All structural steel shall be AASHTO M270 Grade 50.
4. All structural steel shall be hot dipped galvanized, cost included in Furnishing and Erecting Structural Steel pay item (see special provisions for hot-dipped galvanizing for structural steel).
5. No field welding is permitted except as specified in the contract documents.
6. Reinforcement bars designated (E) shall be epoxy coated.
7. Plan dimensions and details relative to existing plans are subject to nominal construction variations. The Contractor shall field verify existing dimensions and details affecting new construction and make necessary approved adjustments prior to construction or ordering of materials. Such variations shall not be cause for additional compensation for a change in scope of the work, however, the Contractor will be paid for the quantity actually furnished at the unit price bid for the work.
8. Bearing seat surfaces shall be constructed or adjusted to the designated elevations within a tolerance of $^{1}/_{8}$ inch (0.01 ft.). Adjustment shall be made either by grinding the surface or by shimming the bearings.
9. Concrete Sealer shall be applied to the designated areas of the abutment and piers.
10. The existing structural steel coating contains lead. The Contractor shall take appropriate precautions to deal with the presence of lead on this project.
11. Slope wall shall be reinforced with welded wire fabric, 6 in. x 6 in. - W4.0 x W4.0, weighing 58 lbs. per 100 sq. ft.
12. Slipforming of the parapets is not allowed.
13. For the Conduit Attached to Structure and Embedded in Structure quantities and details, see Civil and Electrical Plans.
14. For drilled shaft locations where permanent casing is required as shown on the plans, the casing will be paid for under the Permanent Casing pay item. If contractor elects to use permanent casing for ease of construction in locations where permanent casing is not required, the casing will not be paid for separately and shall be considered included in the Drilled Shaft in Soil pay item.
15. Limited groundwater elevation data is available in the boring logs. In addition, groundwater may also be present in deeper granular layers. The groundwater may rise in the shafts to an elevation above the top of granular layers. The Contractor shall consider this information when choosing construction methods. The Contractor will not be compensated for issues related to the groundwater elevation.
16. Temporary Soil Retention System shall be as per Std. Spec. Section 522.07 and as modified herein. Temporary Soil Retention System shall be installed without the use of impact-type pile drivers. The proposed equipment and procedures used for the installation of Temporary Soil Retention System shall be submitted to the Engineer for approval prior to their use. If vibratory equipment utilized, the Contractor shall also submit documentation regarding the operating noise levels and operating vibration characteristics of the equipment proposed. The approval of the equipment and procedure by the Engineer does not guarantee the performance in the field of the equipment will be acceptable. If in the judgment of the Engineer, the noise and/or vibration effects exceed those required by the local residents, then the Contractor must halt production and find a remedy suitable to the Engineer. Threshold values for vibration monitoring are included in the special provision "CONSTRUCTION VIBRATION MONITORING". The costs incurred finding suitable equipment and procedures shall be included in the cost of Temporary Soil Retention System. No additional costs shall be paid for this effort.
17. Existing plans are provided as part of this contract plan set for information only. See Existing As-Builts SN 016-1029 sheets.
18. If Contractor elects to use cantilever forming brackets on exterior beams or girders, brackets shall be placed at same locations as required for hardwood blocks in Article 503.06(b) of Standard Specifications. If additional cantilever forming brackets are required, hardwood blocking shall be wedged between the exterior and first interior beam at each of these additional bracket locations.
19. The Contractor shall coordinate the construction of proposed structure with the construction of shared Pier C1 (built as part of S.N. 016-0461). See S.N. 016-0461 plan sheets for shared Pier C1 details.
20. The Contractor shall take all necessary precautions not to contaminate groundwater during the drilled shaft construction operation. Contractor is responsible for the proper containment and disposal of the contaminated groundwater and spoils resulting from Contractor's means and methods. No additional cost will be paid for this effort.

EXISTING STRUCTURE ASSESSMENT NOTES

1. In order to construct proposed superstructure & substructure elements, Contractor may elect to support temporary construction material and/or equipment, on the existing structures in the vicinity of the proposed structure. The Contractor shall submit Structural Assessment Report(s) for approval prior to beginning the work. See Special Provision.
2. An Existing Structure Information Package (ESIP) will be provided by the Department to the Contractor upon request.

TOTAL BILL OF MATERIAL

ITEM	UNIT	SUPER	SUB	TOTAL
Removal of Existing Structures No. 1	Each	1		1
Protective Shield	Sq. Yd.	3,397		3,397
Structure Excavation	Cu. Yd.		383	383
Concrete Structures	Cu. Yd.	14.0	559.4	573.4
Concrete Superstructure	Cu. Yd.	976.9		976.9
Bridge Deck Grooving	Sq. Yd.	3,231		3,231
Rubbed Finish	Sq. Ft.		6,695	6,695
Form Liner Textured Surface	Sq. Ft.		1,221	1,221
Protective Coat	Sq. Yd.	4,319		4,319
Concrete Superstructure (Approach Slab)	Cu. Yd.	63.0		63.0
Furnishing and Erecting Structural Steel	L. Sum	0.7		0.7
Stud Shear Connectors	Each	13,854		13,854
Reinforcement Bars	Pound		175,120	175,120
Reinforcement Bars, Epoxy Coated	Pound	268,770	140,370	409,140
Bar Splicers	Each	1,893	327	2,220
Slope Wall 4"	Sq. Yd.		151	151
Name Plates	Each	1		1
Permanent Casing	Foot		671	671
Drilled Shaft in Soil	Cu. Yd.		712.5	712.5
Drilled Shaft in Rock	Cu. Yd.		17.8	17.8
Preformed Joint Strip Seal	Foot	88		88
Elastomeric Bearing Assembly, Type I	Each	34		34
Anchor Bolts, 1"	Each	68		68
Anchor Bolts, 1 1/4"	Each	34		34
Temporary Soil Retention System	Sq. Ft.		200	200
Concrete Sealer	Sq. Ft.		9,764	9,764
Geocomposite Wall Drain	Sq. Yd.		58	58
Temporary Drainage System No. 1	L. Sum		1	1
Granular Backfill for Structures	Cu. Yd.		115	115
Drainage Scuppers, DS-11	Each	12		12
Drainage System	L. Sum	0.2		0.2
Pipe Underdrains for Structures 4"	Foot		66	66
Temporary Shoring	Each	1		1
Crosshole Sonic Logging Access Ducts	Foot		1,370	1,370
Crosshole Sonic Logging Testing	Each		4	4

EXISTING STRUCTURE ASSESSMENT NOTES (Cont'd)

3. The Contractor shall retain the services of an engineering firm, prequalified in the IDOT consultant selection category of Highway Bridge (Adv. Typical), for preparation of the Structural Assessment Report(s). Contractor's pre-approval shall not be applicable for this project. See Special Provision.

Current existing structure Load Rating on file:

S.N. 016-1029 (EB I-290 over I-90/94)
Inventory: HS 17.2
Operating: HS 28.7
Live Load Restriction: None

S.N. 016-2452 (SE Ramp over I-90/94)
Inventory: HS 13.4
Operating: HS 22.2
Live Load Restriction: None

S.N. 016-1703 (WB I-290 over I-90/94)*

* SN 016-1703 was under construction during the preparation of the final plans. The Contractor shall coordinate with the IDOT to obtain latest rating information prior to submitting the Structural Assessment Reports for Contractor's Means and Methods.

4. Inventory and Operating Ratings and Live Load Restrictions are provided for information only. Inventory and Operating Ratings are based on HS loading and configuration, except as noted for S.N. 016-1703. Live Load Restrictions are based on Illinois legal loads and configurations. The Ratings and Live load Restrictions are not necessarily representative of capacities to support the Contractor's equipment.
5. The contractor is advised that the existing structures may contain members in deteriorated conditions with reduced load carrying capacities. It is the Contractor's responsibility to account for the condition of existing structures when developing construction procedures for using them to support construction loads.
6. The contractor shall verify that the structural demands of the applied loads due to the Contractor's means and methods will not exceed the available capacity of the structure at the time loads are applied. Most likely, the Contractor will be required to provide additional shoring under the existing bridges (or other methods of retrofitting) to support construction loads. Design, installation and subsequent removal of such shoring system will be the responsibility of the Contractor and will not be paid separately.
7. The Contractor shall use caution and not damage any component of the existing structure. Upon completion of work and prior to allowing traffic back on the existing structure the contractor must restore existing structure in its original condition.

INDEX OF SHEETS

S1-01 General Plan & Elevation
S1-02 General Notes and Total Bill of Material
S1-03 Profiles and Curve Data
S1-04 Sections and Details
S1-05 Substructure Layout
S1-06 Stage Construction - 1
S1-07 Stage Construction - 2
S1-08 Temporary Concrete Barrier
S1-09 Existing Structure Removal - 1
S1-10 Existing Structure Removal - 2
S1-11 Top of Slab Elevation Plan
S1-12 Top of Slab Elevations - 1
S1-13 Top of Slab Elevations - 2
S1-14 Top of Slab Elevations - 3
S1-15 Top of Slab Elevations - 4
S1-16 Top of Approach Slab Elevations
S1-17 Deck Plan - 1
S1-18 Deck Plan - 2
S1-19 Deck Details - 1
S1-20 Deck Details - 2
S1-21 Sign Structure Support Details
S1-22 West Approach Slab Plan
S1-23 Approach Slab Details
S1-24 Drainage Scupper, DS-11
S1-25 Drainage System
S1-26 Expansion Joint Details
S1-27 Framing Plan
S1-28 Girder Elevations - 1
S1-29 Girder Elevations - 2
S1-30 Steel Details - 1
S1-31 Steel Details - 2
S1-32 Steel Details - 3
S1-33 Moment and Reaction Tables - 1
S1-34 Moment and Reaction Tables - 2
S1-35 Bearing Details
S1-36 West Abutment
S1-37 Abutment Details
S1-38 Pier 1
S1-39 Pier 1 Details - 1
S1-40 Pier 1 Details - 2
S1-41 Pier 2
S1-42 Pier 2 Details - 1
S1-43 Pier 2 Details - 2
S1-44 Pier 3
S1-45 Pier 3 Details - 1
S1-46 Pier 3 Details - 2
S1-47 Bar Splicer and Mechanic Splicer Details
S1-48 Soil Boring Logs - 1
S1-49 Soil Boring Logs - 2
S1-50 Soil Boring Logs - 3
S1-51 Soil Boring Logs - 4
S1-52 Soil Boring Logs - 5

STATION 5156+92.29
BUILT BY
STATE OF ILLINOIS
F.A.I. ROUTE 90/94/290
SECTION 2014-001 R&B
LOADING HL-93
STRUCTURE NO. 016-1704

NAME PLATE
See Std. 515001

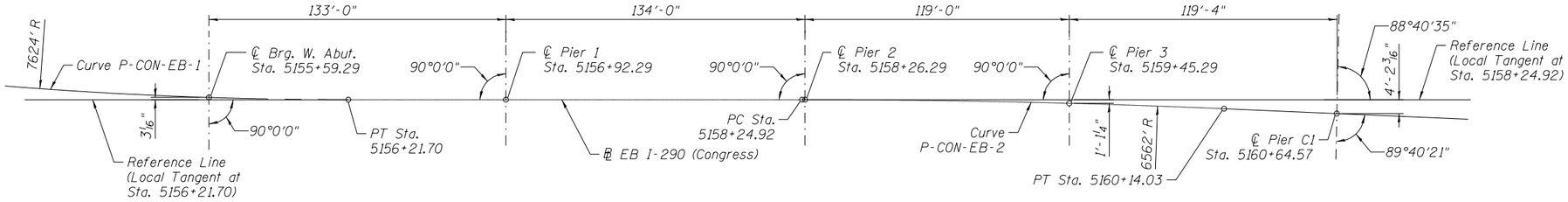

OFFSET SKETCH

For Information Only
Part of Future Contract

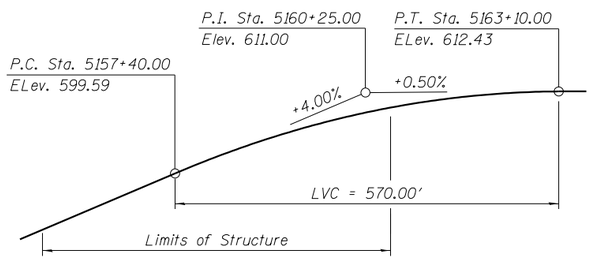

PROFILE GRADE
(along ℄ EB I-290 (Congress))

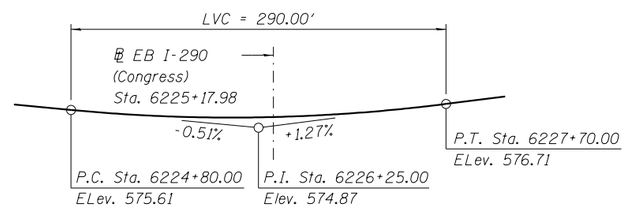

PROFILE GRADE
(along ℄ SB I-90/94)

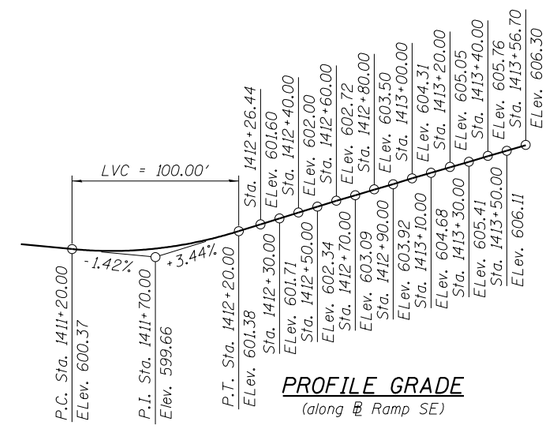

PROFILE GRADE
(along ℄ Ramp SE)

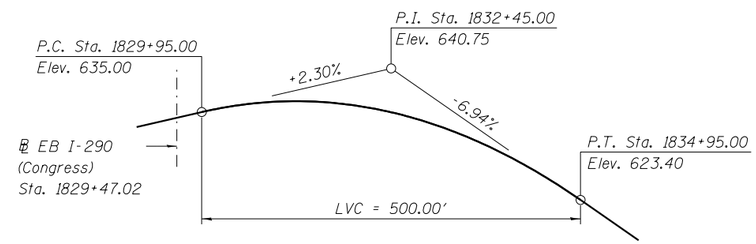

PROFILE GRADE
(along ℄ Ramp NW)

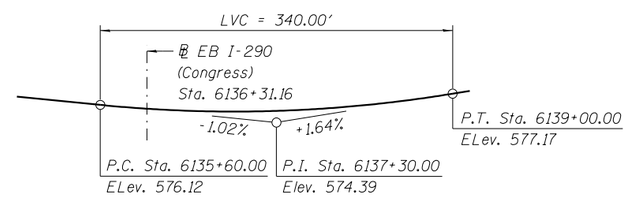

PROFILE GRADE
(along ℄ NB I-90/94)

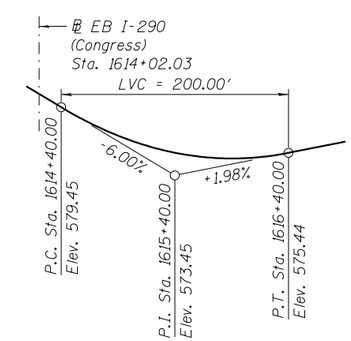

PROFILE GRADE
(along ℄ Ramp EN)

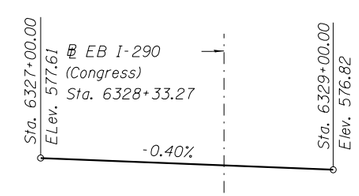

PROFILE GRADE
(along ℄ NB Bypass)

CURVE DATA
(EB I-290 (Congress))
Curve: P-CON-EB-1
PI Sta. = 5155+15.58
Δ = 1° 35' 42" (Lt)
D = 0° 45' 05"
R = 7,624.00'
T = 106.13'
L = 212.25'
E = 0.74'
e = 2.00%
T.R. = NA
S.E. RUN = 18'
P.C. Sta. = 5154+09.45
P.T. Sta. = 5156+21.70
DS = 50

Curve: P-CON-EB-2
PI Sta. = 5159+19.48
Δ = 1° 39' 04" (Rt)
D = 0° 52' 23"
R = 6,562.00'
T = 94.56'
L = 189.11'
E = 0.68'
e = 2.00%
T.R. = 72'
S.E. RUN = 72'
P.C. Sta. = 5158+24.92
P.T. Sta. = 5160+14.03
DS = 50

CURVE DATA
(Ramp NW)
Curve: P-CIR-NW-6
PI STA. = 1831+44.30
Δ = 88° 30' 25" (Lt)
D = 10° 36' 37"
R = 540.00'
T = 526.11'
L = 834.16'
E = 213.92'
e = 5.40%
T.R. = 39'
S.E. RUN = 105'
P.C. Sta. = 1826+18.19
P.T. Sta. = 1834+52.35
DS = 35

CURVE DATA
(Ramp SE)
Curve: P-CIR-SE-3
PI Sta. = 1412+44.91
Δ = 24° 25' 53" (Rt)
D = 22° 55' 06"
R = 250.00'
T = 54.12'
L = 106.60'
E = 5.79'
e = 5.40%
T.R. = NA
S.E. RUN = 78'
P.C. Sta. = 1411+90.79
P.T. Sta. = 1412+97.39
DS = 25

CURVE DATA
(SB I-90/94)
Curve: P-KDR-SB-3
PI Sta. = 6224+30.06
Δ = 11° 28' 39" (Rt)
D = 2° 41' 06"
R = 2,134.00'
T = 214.46'
L = 427.48'
E = 10.75'
e = 4.20%
T.R. = NA
S.E. RUN = 203'
P.C. Sta. = 6222+15.60
P.T. Sta. = 6226+43.08
DS = 60

CURVE DATA
(Ramp EN)
Curve: P-CIR-EN-2
PI Sta. = 1624+72.31
Δ = 158° 53' 11" (Lt)
D = 16° 51' 06"
R = 340.00'
T = 1,824.37'
L = 942.85'
E = 1,515.78'
e = 5.60%
T.R. = 36'
S.E. RUN = 102'
P.C. Sta. = 1606+47.94
P.T. Sta. = 1615+88.31
DS = 30

CURVE DATA
(NB Bypass)
Curve: P-NCD-NX-4
PI Sta. = 6328+76.78
Δ = 59° 05' 41" (LT)
D = 14° 08' 50"
R = 405.00'
T = 229.58'
L = 417.72'
E = 60.54'
e = 5.40%
T.R. = 36'
S.E. RUN = 98'
P.C. Sta. = 6326+47.20
P.T. Sta. = 6330+64.91
DS = 30

0161704-60X75-S03_Profiles&CurveData.dgn

AECOM

USER NAME = floresg	DESIGNED - JXH	REVISED	
	CHECKED - ATB	REVISED	
PLOT SCALE = N.T.S.	DRAWN - JXH	REVISED	
PLOT DATE = 6/28/2017	CHECKED - ATB	REVISED	

STATE OF ILLINOIS
DEPARTMENT OF TRANSPORTATION

PROFILES AND CURVE DATA
STRUCTURE NO. 016-1704
SHEET NO. S1-03 OF S1-52 SHEETS

F.A.I. RTE.	SECTION	COUNTY	TOTAL SHEETS	SHEET NO.
90/94/290	2014-001 R&B	COOK	696	224
		CONTRACT NO. 60X75		
		ILLINOIS FED. AID PROJECT		

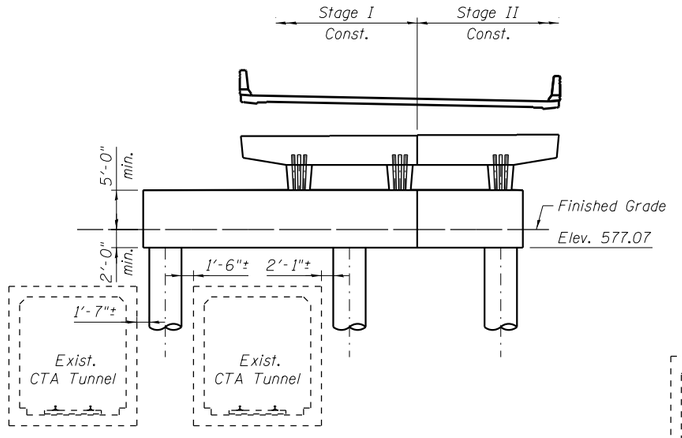

PIER 1 ELEVATION
(Looking East)

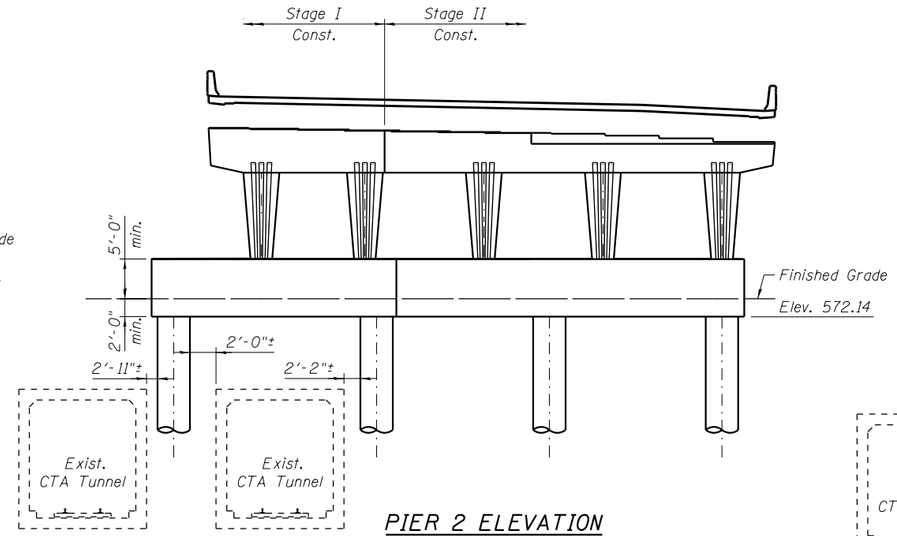

PIER 2 ELEVATION
(Looking East)

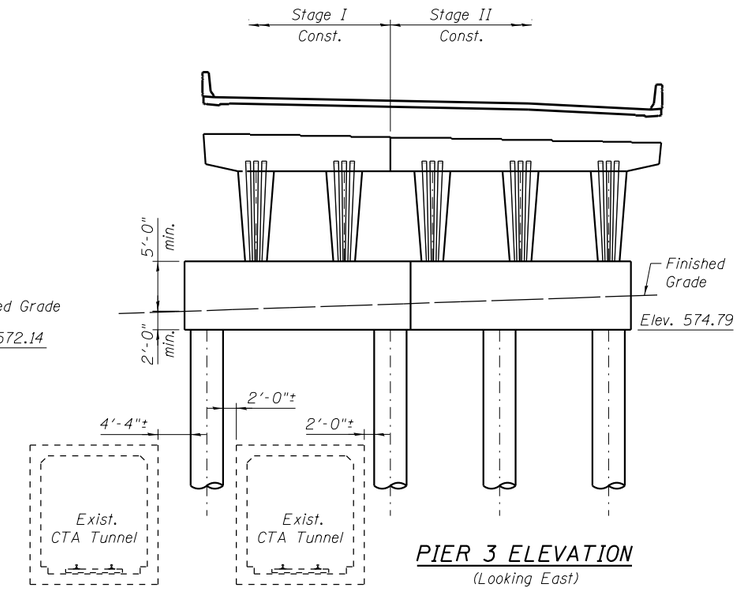

PIER 3 ELEVATION
(Looking East)

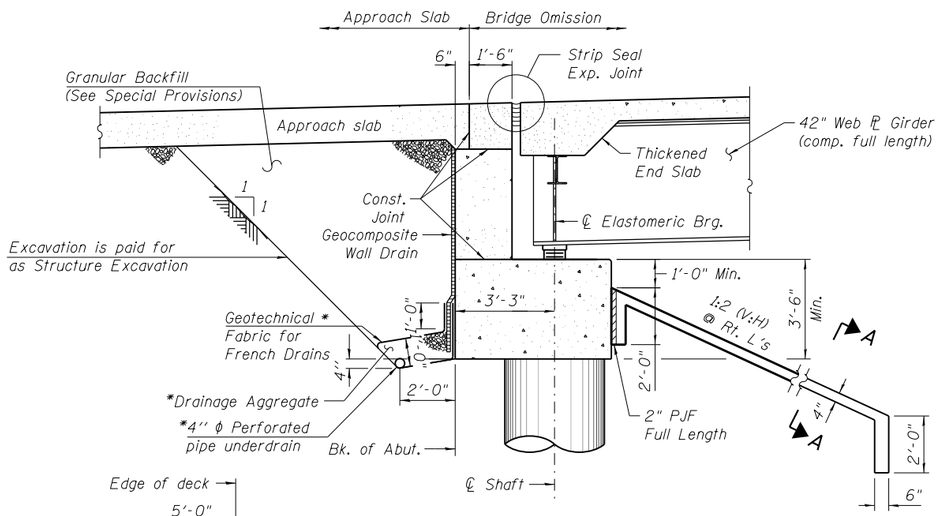

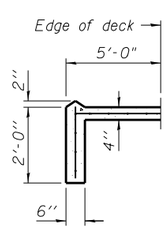

SECTION A-A

SECTION THRU ABUTMENT
(Horiz. Dims. @ Rt. L's to ℄ Brg.)

*Included in the cost of Pipe Underdrains for Structures. (See Special Provisions)

Note: All drainage system components shall extend 2'-0" from the end of each wingwall except an outlet pipe shall extend until intersecting with the side slopes. The pipes shall drain into concrete headwalls. (See Article 601.05 of the Standard specifications and Highway Standard 601101)

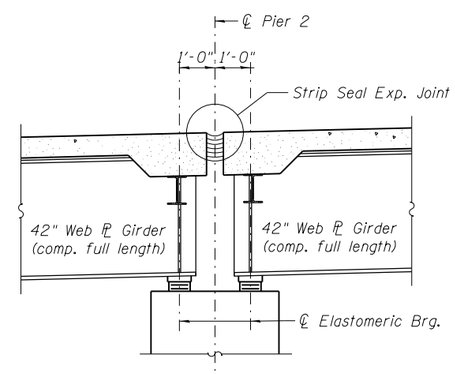

SECTION THRU PIER 2
(Horiz. Dims. @ Rt. L's to ℄ Pier)

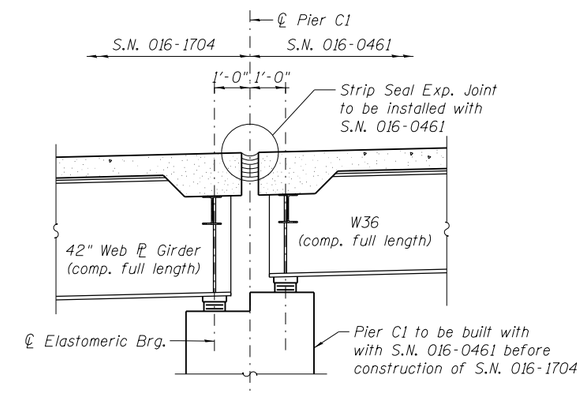

SECTION THRU PIER C1
(Horiz. Dims. @ Rt. L's to ℄ Pier)

NOTES:

All work adjacent to and over the CTA tunnel shall conform to requirements identified within the CTA Flagging and Coordination special provisions.

0161704-60X75-S04-Sections&Details.dgn

AECOM

USER NAME = floresg	DESIGNED - JXH	REVISED	
	CHECKED - ATB	REVISED	
PLOT SCALE = N.T.S.	DRAWN - JXH	REVISED	
PLOT DATE = 6/28/2017	CHECKED - ATB	REVISED	

STATE OF ILLINOIS
DEPARTMENT OF TRANSPORTATION

SECTIONS AND DETAILS
STRUCTURE NO. 016-1704
SHEET NO. S1-04 OF S1-52 SHEETS

F.A.I. RTE.	SECTION	COUNTY	TOTAL SHEETS	SHEET NO.
90/94/290	2014-001 R&B	COOK	696	225
		CONTRACT NO. 60X75		
		ILLINOIS FED. AID PROJECT		

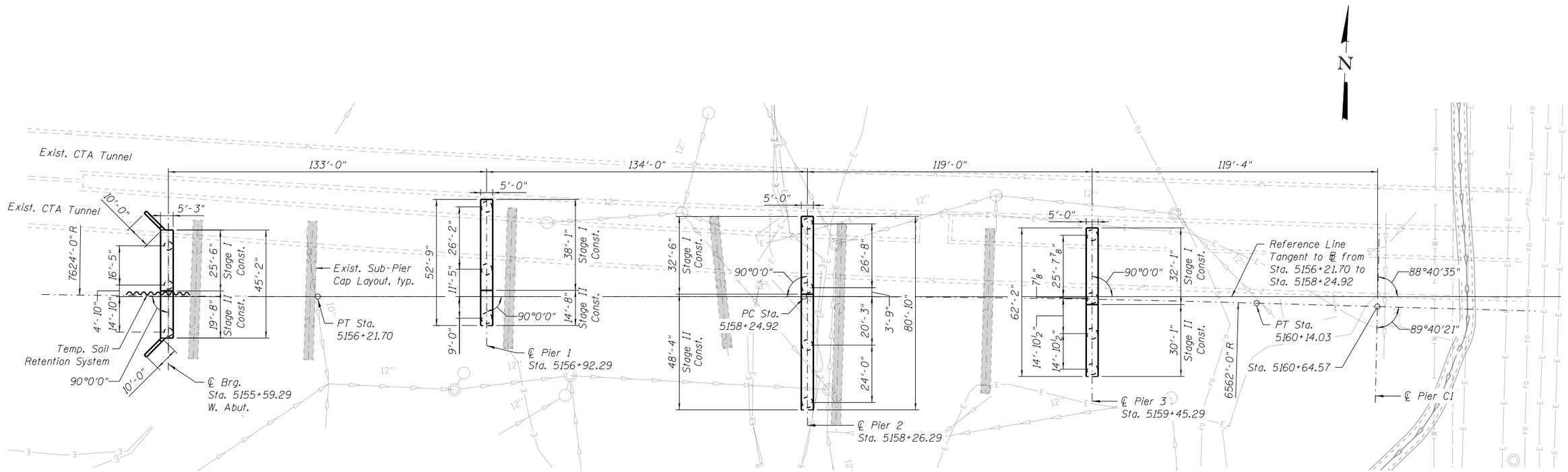

SUBSTRUCTRE LAYOUT

LEGEND:

- Combined Sewer
- Electric — E —
- Fiber Optic — FO —
- Telephone — T —
- Storm Sewer
- Water Line — W —
- Fire Hydrant
- Light Pole

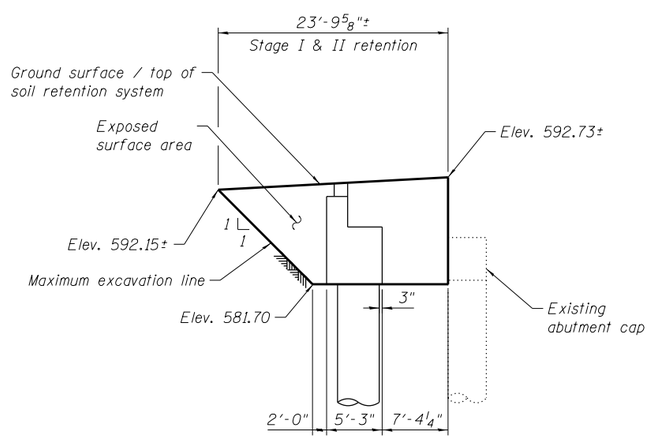

TEMPORARY SOIL RETENTION AT WEST ABUTMENT

(Dimensions measured along Stage Construction Line)

NOTES:

1. A cantilever sheet piling design does not appear feasible and additional members or other retention systems may be necessary. The Contractor shall submit a temporary soil retention system and soil retention system design including plan details and calculations for review and acceptance by the Engineer.

0161704-60X75-S05-Substructurelayout.dgn

AECOM	USER NAME = floresg	DESIGNED - JXH	REVISED
		CHECKED - ATB	REVISED
	PLOT SCALE = N.T.S.	DRAWN - JXH	REVISED
	PLOT DATE = 6/28/2017	CHECKED - ATB	REVISED

STATE OF ILLINOIS
DEPARTMENT OF TRANSPORTATION

SUBSTRUCTURE LAYOUT
STRUCTURE NO. 016-1704
SHEET NO. S1-05 OF S1-52 SHEETS

F.A.I. RTE.	SECTION	COUNTY	TOTAL SHEETS	SHEET NO.
90/94/290	2014-001 R&B	COOK	696	226
		CONTRACT NO. 60X75		
	ILLINOIS	FED. AID PROJECT		

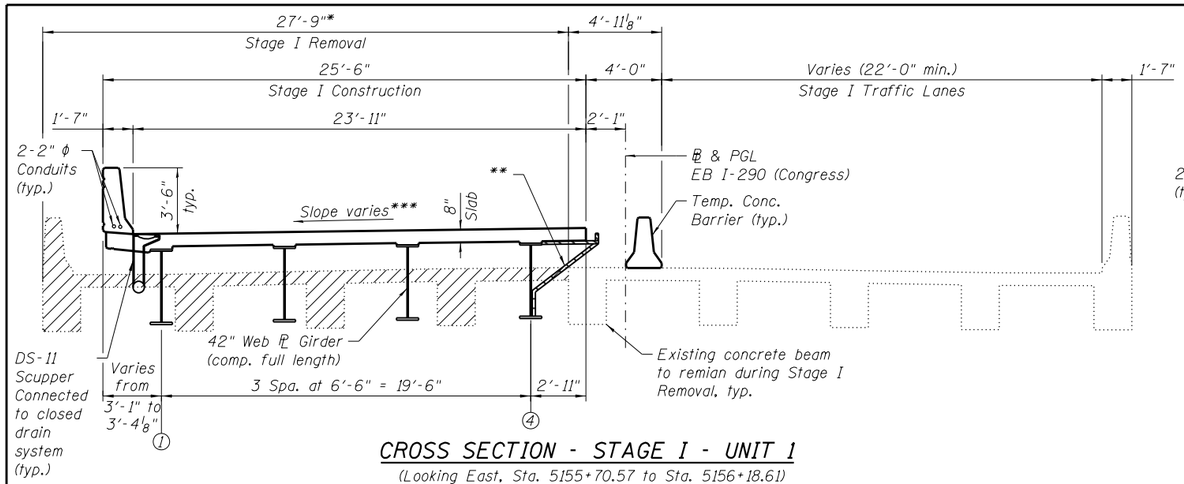

CROSS SECTION - STAGE I - UNIT 1

(Looking East, Sta. 5155+70.57 to Sta. 5156+18.61)

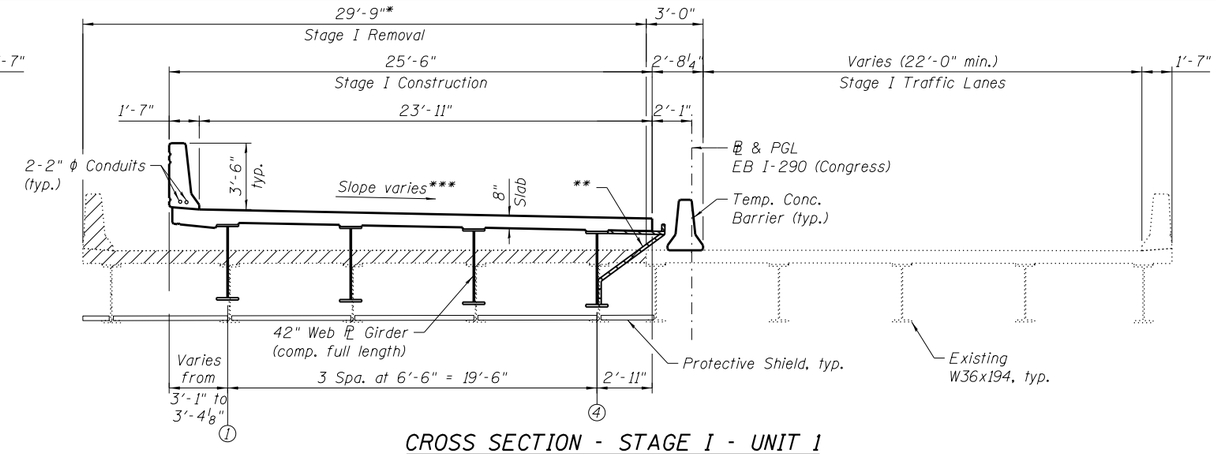

CROSS SECTION - STAGE I - UNIT 1

(Looking East, Sta. 5156+18.61 to Sta. 5158+26.29)

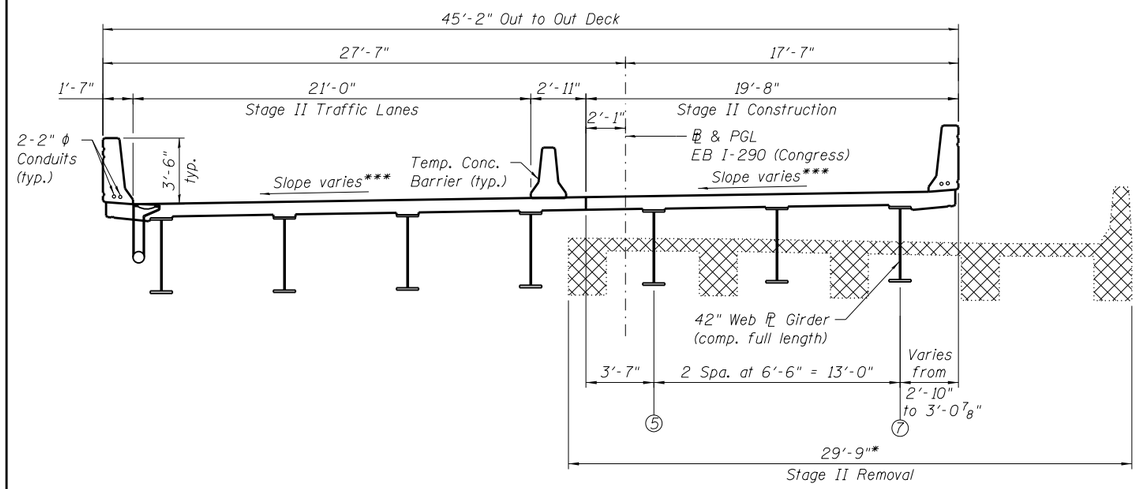

CROSS SECTION - STAGE II - UNIT 1

(Looking East, Sta. 5155+70.57 to Sta. 5156+18.61)

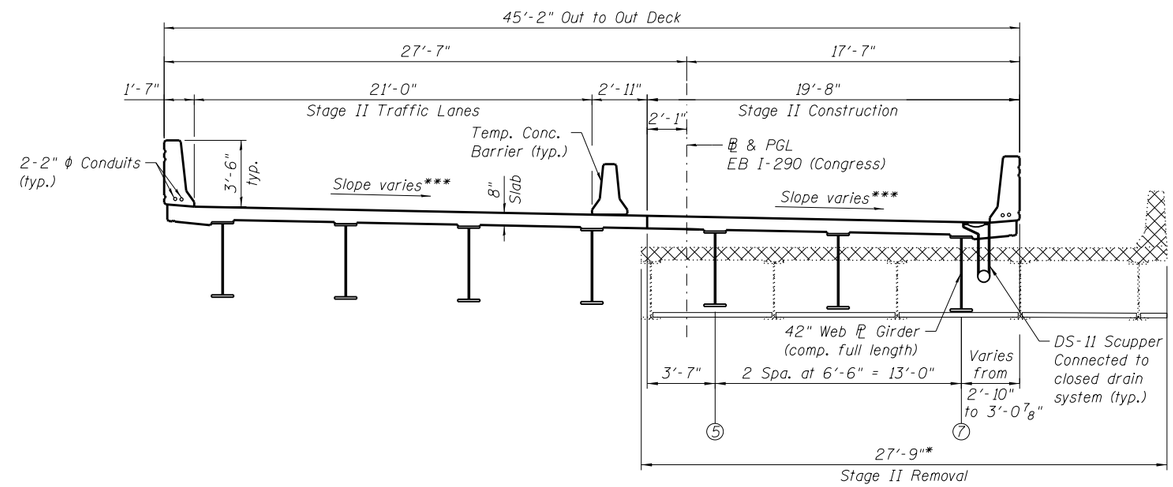

CROSS SECTION - STAGE II - UNIT 1

(Looking East, Sta. 5156+18.61 to Sta. 5158+26.29)

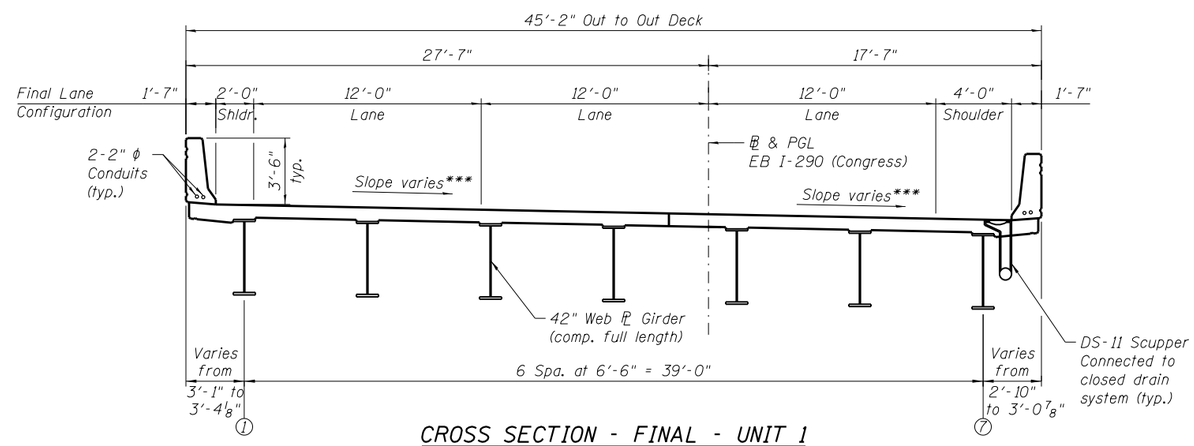

CROSS SECTION - FINAL - UNIT 1

(Looking East, Sta. 5155+70.57 to Sta. 5158+26.29)

LEGEND:

Stage I Removal

Stage II Removal

* Exist. deck width is measured perpendicular to existing ℄.

** Temporary Drainage System No. 1 (Designed by Contractor, see Special Provisions.) Minimum cross-sectional area of Temporary Drainage System = 0.35 Sq. Ft.

*** See Sht. S1-20.

NOTE:

1. See Sheet S1-07 for Stage Removal Notes.
2. See Sheet S1-08 for Details of Temporary Concrete Barrier.

AECOM

USER NAME = floresg	DESIGNED - SD	REVISED	
	CHECKED - JXH	REVISED	
PLOT SCALE = N.T.S.	DRAWN - SD	REVISED	
PLOT DATE = 6/28/2017	CHECKED - JXH	REVISED	

STATE OF ILLINOIS
DEPARTMENT OF TRANSPORTATION

STAGE CONSTRUCTION – 1
STRUCTURE NO. 016–1704

SHEET NO. S1-06 OF S1-52 SHEETS

F.A.I. RTE.	SECTION	COUNTY	TOTAL SHEETS	SHEET NO.
90/94/290	2014-001 R&B	COOK	696	227
		CONTRACT NO. 60X75		
		ILLINOIS FED. AID PROJECT		

0161704-60X75-S06_StageConstruction.dgn

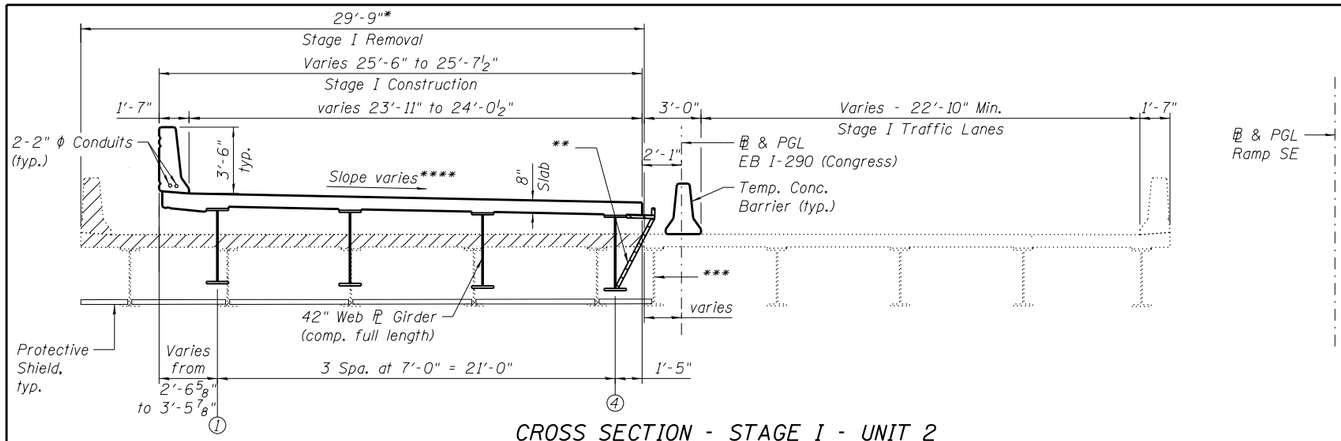

CROSS SECTION - STAGE I - UNIT 2

(Looking East, Sta. 5158+26.29 to Sta. 5160+64.53)

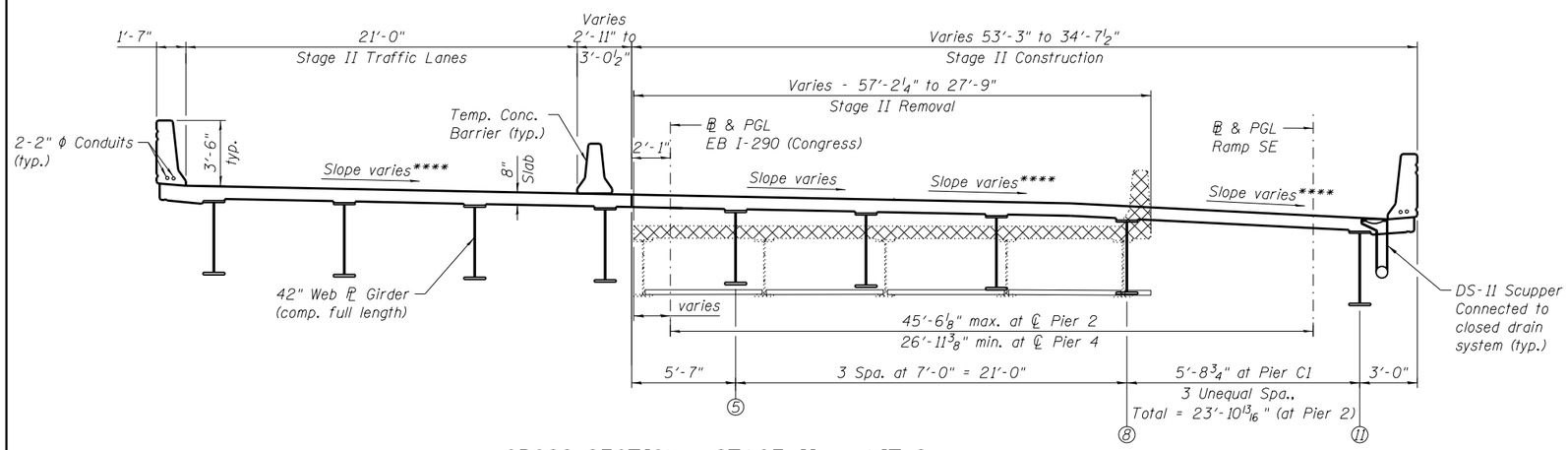

CROSS SECTION - STAGE II - UNIT 2

(Looking East, Sta. 5158+26.29 to Sta. 5160+64.53)

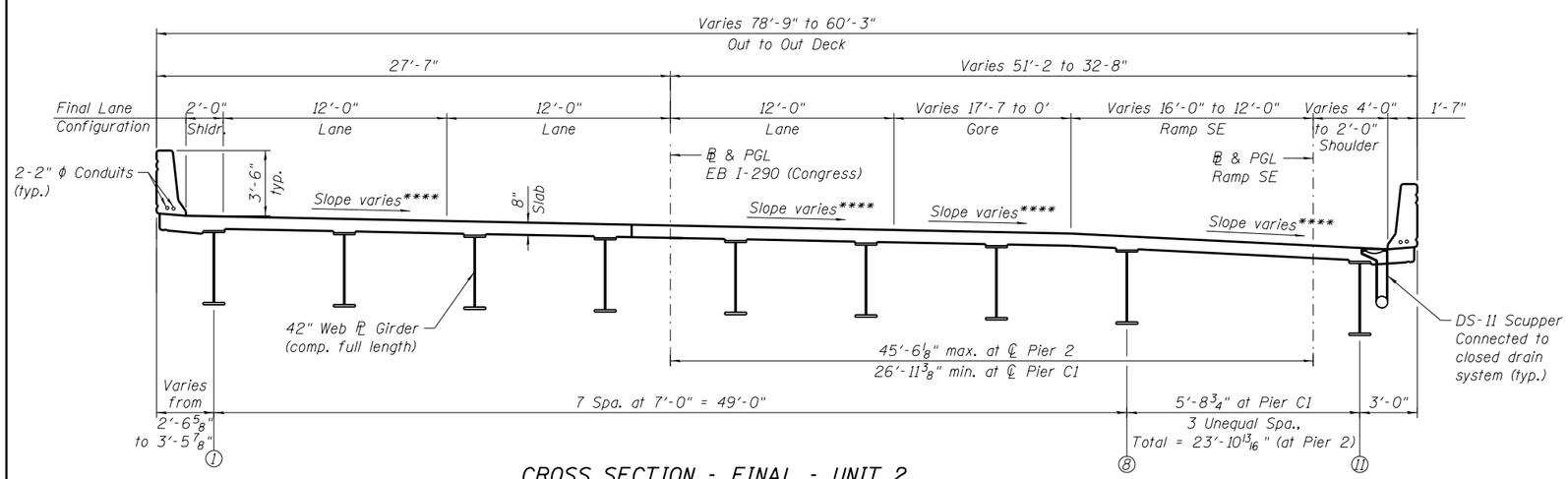

CROSS SECTION - FINAL - UNIT 2

(Looking East, Sta. 5158+26.29 to Sta. 5160+64.53)

LEGEND:

- Stage I Removal
- Stage II Removal
- Partial Beam End Removal

* Existing deck width is measured perpendicular to existing ℄.

** Temporary Drainage System No. 1 (Designed by Contractor, see Special Provisions.) Minimum cross-sectional area of Temporary Drainage System = 0.35 Sq. Ft.

*** See Temporary Support Detail for partial beam end removal of existing beam at Pier C1 during Stage I Removal

**** See Sht. S1-20.

STAGE REMOVAL NOTES

1. Plan dimensions and details relative to existing plans are subject to construction variations. The Contractor shall field verify existing dimensions and details, and modify suggested stage removal lines as necessary to provide the minimum traffic width shown in the plans. Changes to the suggested stage removal lines and/or the traffic control shall be approved by the Engineer.
2. In the event of any deck slab failure as the result of either additional corrosion or removal of the deck slab the Contractor shall immediately cease work, implement safe traffic control measures and notify the Engineer. The Contractor may be required to perform immediate repairs depending upon the type of deck slab failure.
3. When the deck is cut along the existing top flange to minimize the overhang, the Contractor shall take care not to damage the existing top flange below the deck. Any damage to the existing steel shall be repaired by the Contractor at no further cost to the Department.
4. See Sheets S-9 thru S-10 for substructure stage removal of existing structure.
5. For quantity of Temporary Concrete Barrier, see Roadway Plans.
6. Partial beam end removal of existing beam as shown in Temporary Support Detail shall be included in the cost of Removal of Existing Structure No. 1.
7. See Sht. S-20 for deck cross slopes.
8. See Sheet S1-08 for Details of Temporary Concrete Barrier.

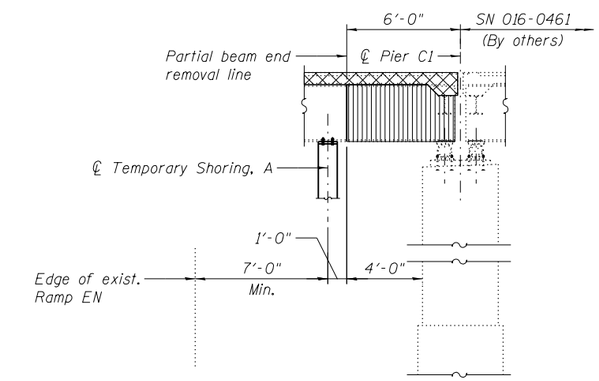

TEMPORARY SUPPORT DETAIL

SERVICE REACTION TABLE FOR TEMPORARY SHORING OF EXISTING BEAM *	
Location	Exist. Beam at Pier C1
Temp. Shoring	A
D (k)	44
L+Imp. (k)	46
Total (k)	90

* Reactions shown represent the maximum reaction for a single beam.

BILL OF MATERIAL

Item	Unit	Quantity
Temporary Drainage System No. 1	L. Sum	1

0161704-60X75-S07-StageConstruction.dgn

AECOM

USER NAME = floresg	DESIGNED - SD	REVISED	
	CHECKED - JXH	REVISED	
PLOT SCALE = N.T.S.	DRAWN - SD	REVISED	
PLOT DATE = 6/28/2017	CHECKED - JXH	REVISED	

STATE OF ILLINOIS
DEPARTMENT OF TRANSPORTATION

STAGE CONSTRUCTION - 2
STRUCTURE NO. 016-1704

SHEET NO. S1-07 OF S1-52 SHEETS

F.A.I. RTE.	SECTION	COUNTY	TOTAL SHEETS	SHEET NO.
90/94/290	2014-001 R&B	COOK	696	228

CONTRACT NO. 60X75

ILLINOIS FED. AID PROJECT

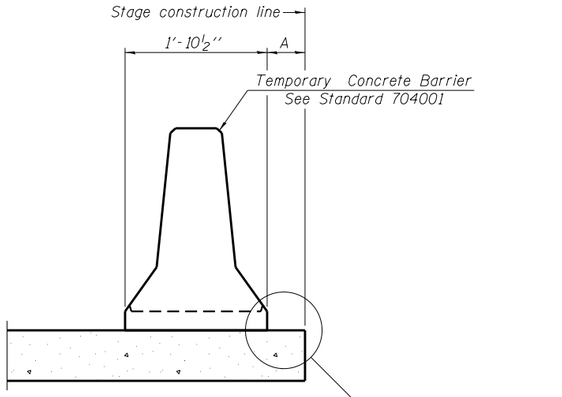

When "A" is 3'-1'' or less, the temporary concrete barrier shall be restrained to the new slab according to Detail I, II or III. No restraint is required when "A" is greater than 3'-1''.

NEW SLAB OR NEW DECK BEAM

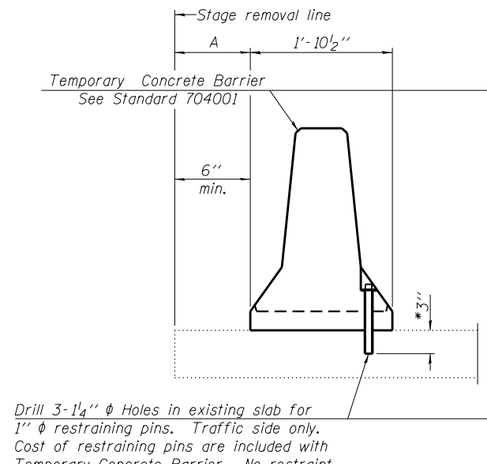

Drill 3-1¼'' ϕ Holes in existing slab for 1'' ϕ restraining pins. Traffic side only. Cost of restraining pins are included with Temporary Concrete Barrier. No restraint is required when ''A'' is greater than 3'-1''.

EXISTING SLAB

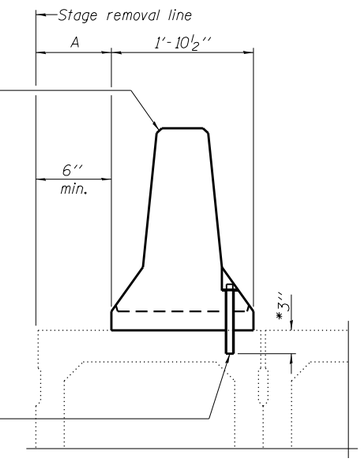

* When hot-mix asphalt wearng surface is present, embedment shall be 3'' plus the wearing surface depth.

EXISTING DECK BEAM

SECTIONS THRU SLAB OR DECK BEAM

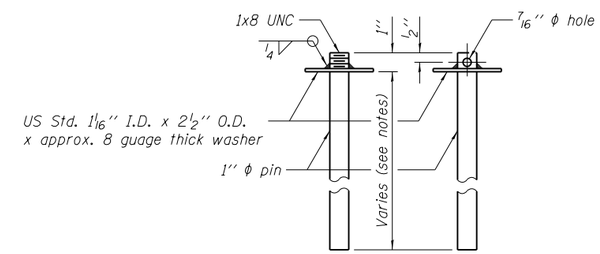

RESTRAINING PIN

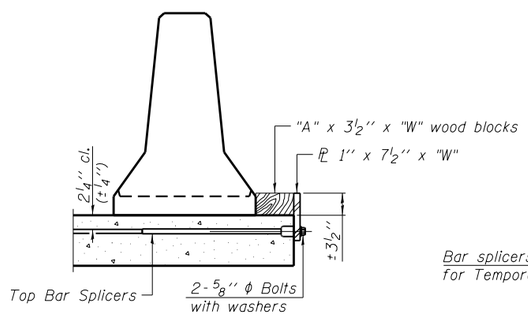

DETAIL I

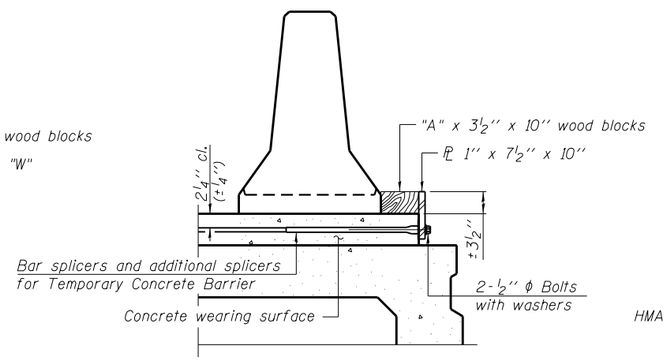

DETAIL II

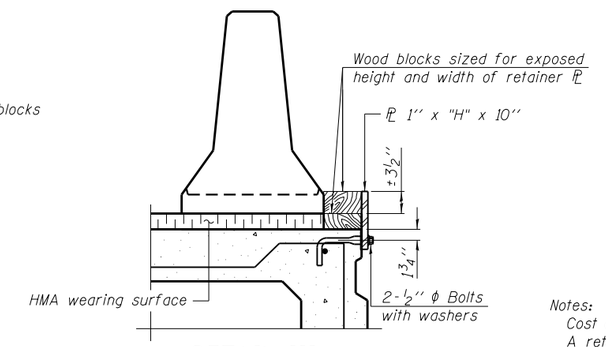

DETAIL III

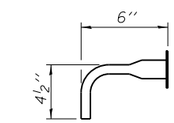

BAR SPLICER FOR #4 BAR - DETAIL III

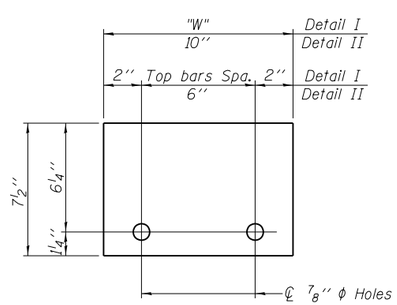

STEEL RETAINER PL 1'' x 7½'' x "W"

(Detail I and II)

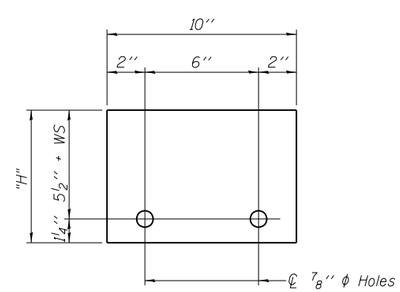

STEEL RETAINER PL 1'' x "H" x 10''

(Detail III)

Notes:

Cost of retainer assembly is included with Temporary Concrete Barrier.

A retainer assembly shall be located at the approximate ℄ of each temporary concrete barrier.

The retainer plate shall not be removed until the concrete on the adjacent stage is ready to be poured. For Detail III applications the retainer plate shall not be removed until just prior to placing the adjacent beam.

When the 'A' dimension is less than 1½'', the wood block shall be omitted and the barrier shall be placed in direct contact with the steel retainer plate. For deck beam applications the minimum required 'A' distance is 6'' to accommodate the shear key clamping device.

Detail I - Installation for a new bridge deck or bridge slab.

Detail II - Installation for a new deck beam with an initial concrete wearing surface. Additional bar splicers shall be provided at 6'-0'' centers and paired with the bar splicers of the concrete wearing surface reinforcement to accommodate the installation of the retainer assemblies. The cost of the additional bar splicers is included with the concrete wearing surface.

Detail III - Installation for a new deck beam with no initial wearing surface or with an initial hot-mix asphalt (HMA) wearing surface present. The deck beam directly beneath the temporary concrete barrier shall be fabricated with bar splicer inserts in the side of the beam, as detailed, to accommodate the installation of the retainer assemblies. A pair of bar splicers, 6'' apart, shall be placed at 6'-0'' centers along the length of the beam. The cost of the bar splicers is included with the deck beam.

R-27

07-22-16

0161704-60X75-S08-TempConcreteBarrier.dgn

AECOM	USER NAME = floresg	DESIGNED - JXH	REVISED
		CHECKED - DD	REVISED
	PLOT SCALE = N.T.S.	DRAWN - JXH	REVISED
	PLOT DATE = 6/28/2017	CHECKED - DD	REVISED

STATE OF ILLINOIS
DEPARTMENT OF TRANSPORTATION

TEMPORARY CONCRETE BARRIER
STRUCTURE NO. 016-1704

SHEET NO. S1-08 OF S1-52 SHEETS

F.A.I. RTE.	SECTION	COUNTY	TOTAL SHEETS	SHEET NO.
90/94/290	2014-001 R&B	COOK	696	229
		CONTRACT NO. 60X75		
		ILLINOIS FED. AID PROJECT		

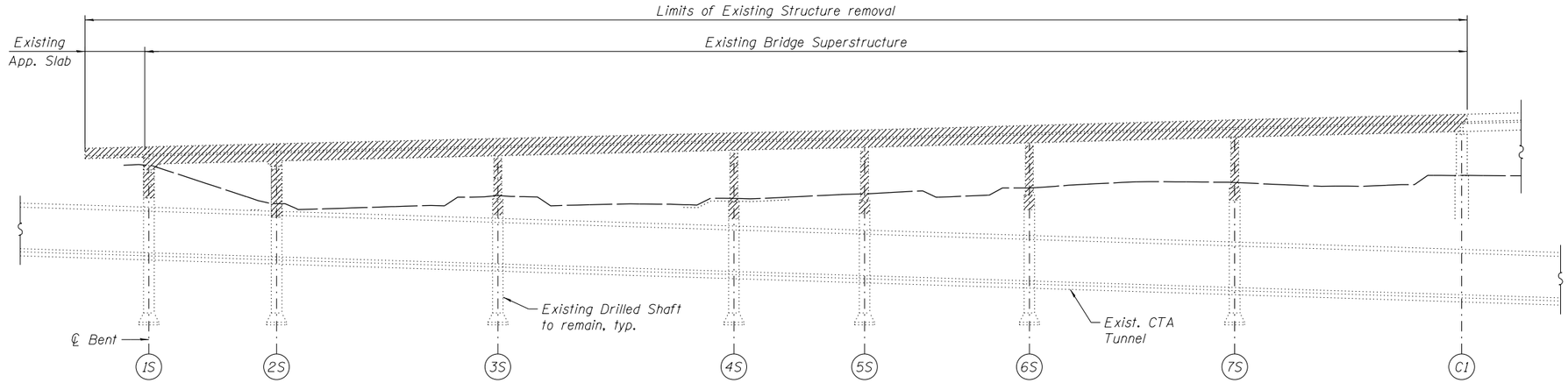

ELEVATION

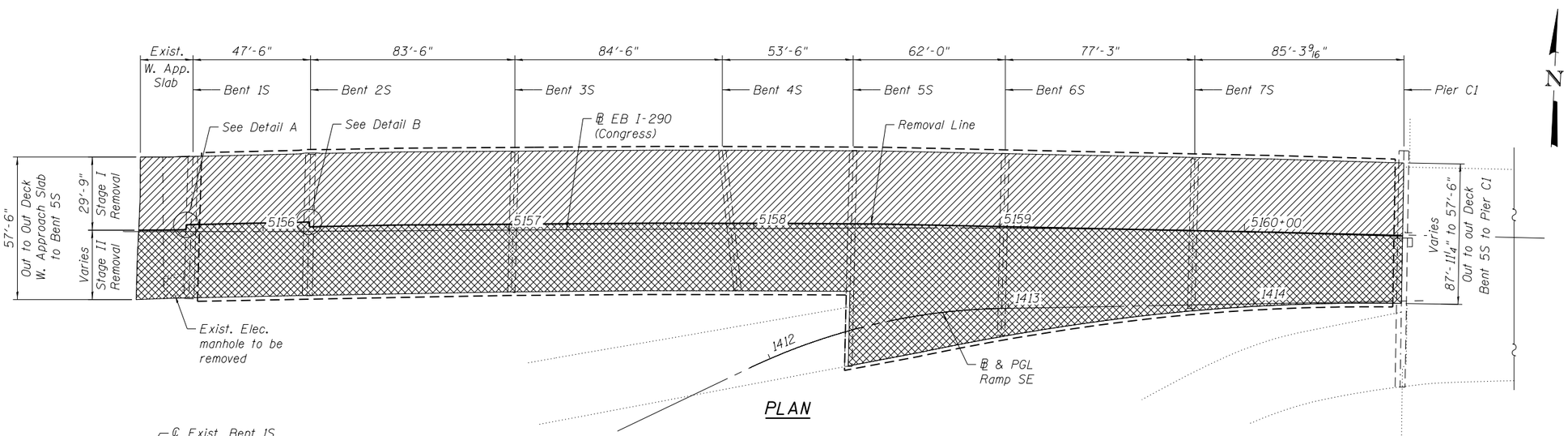

PLAN

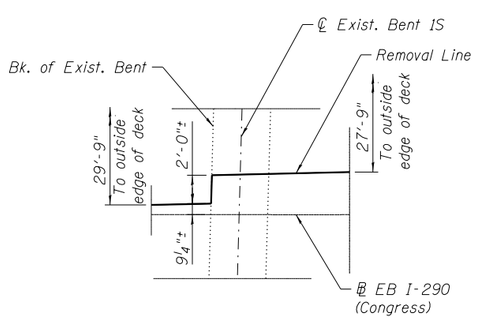

DETAIL A

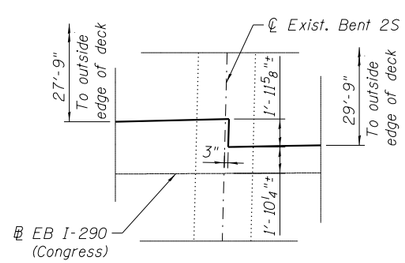

DETAIL B

LEGEND:

- Stage I Removal
- Stage II Removal
- Limits of Protective Shield

BILL OF MATERIAL

Item	Unit	Quantity
Removal of Existing Structures No. 1	Each	1
Protective Shield	Sq Yd	3397

0161704-60X75-S09-Removal.dgn

AECOM

USER NAME = floresg	DESIGNED - SD	REVISED	
	CHECKED - JXH	REVISED	
PLOT SCALE = N.T.S.	DRAWN - GF	REVISED	
PLOT DATE = 6/28/2017	CHECKED - JXH	REVISED	

STATE OF ILLINOIS
DEPARTMENT OF TRANSPORTATION

EXISTING STRUCTURE REMOVAL – 1
STRUCTURE NO. 016–1704
SHEET NO. S1-09 OF S1-52 SHEETS

F.A.I. RTE.	SECTION	COUNTY	TOTAL SHEETS	SHEET NO.
90/94/290	2014-001 R&B	COOK	696	230
		CONTRACT NO. 60X75		
		ILLINOIS FED. AID PROJECT		

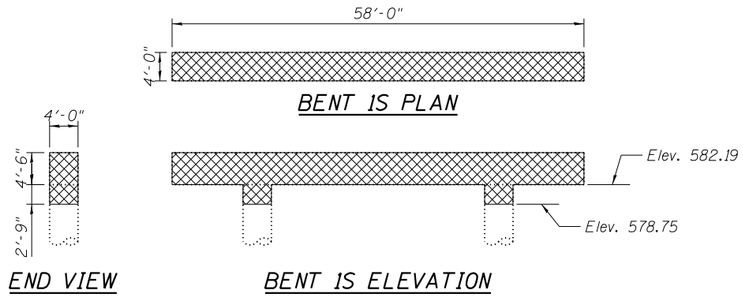

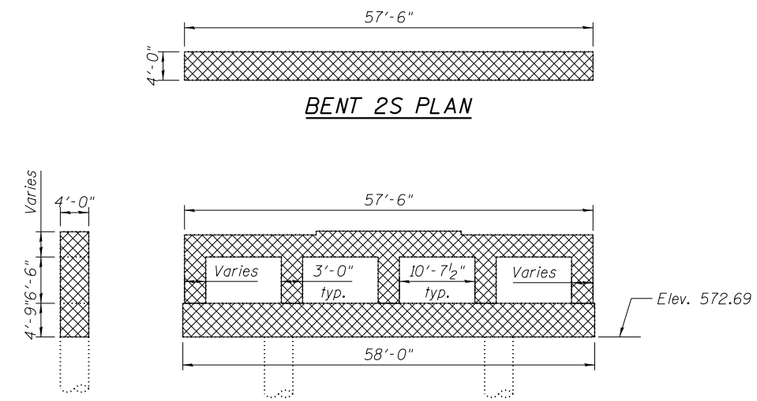

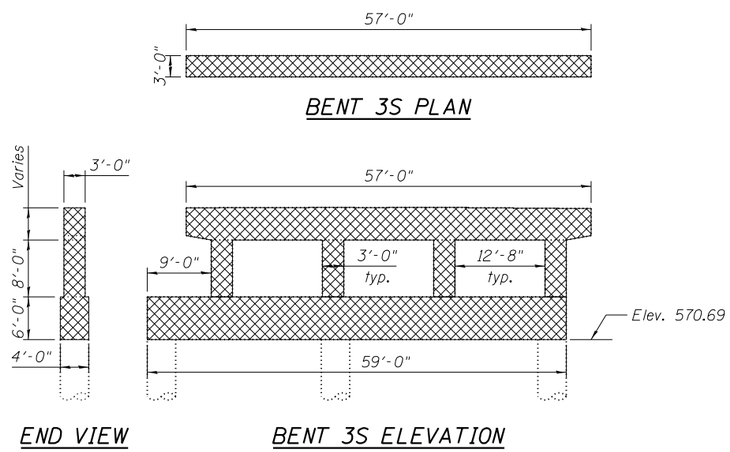

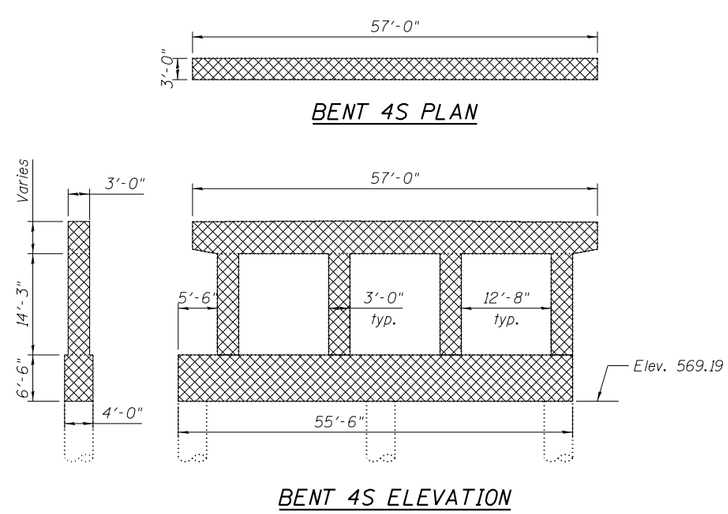

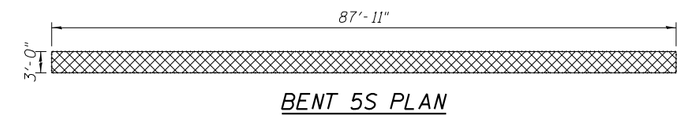

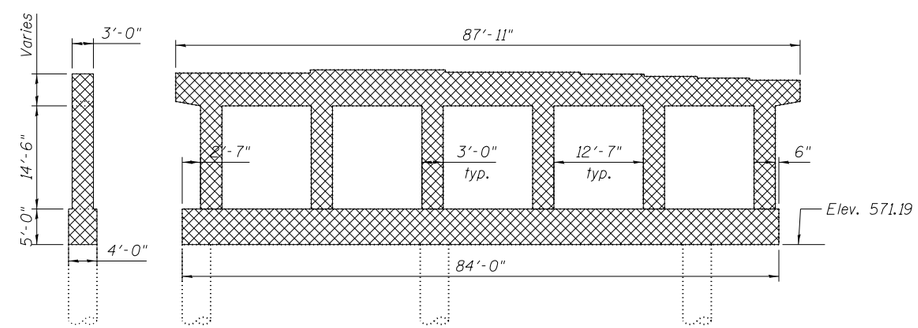

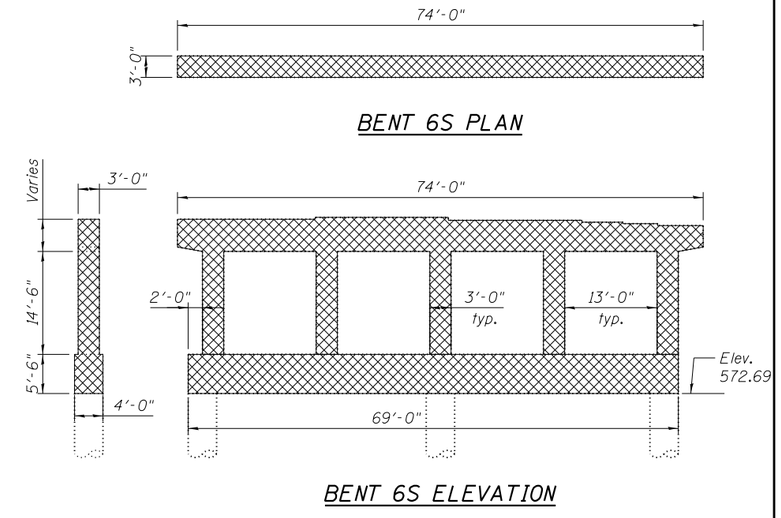

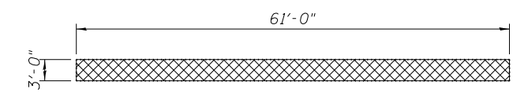

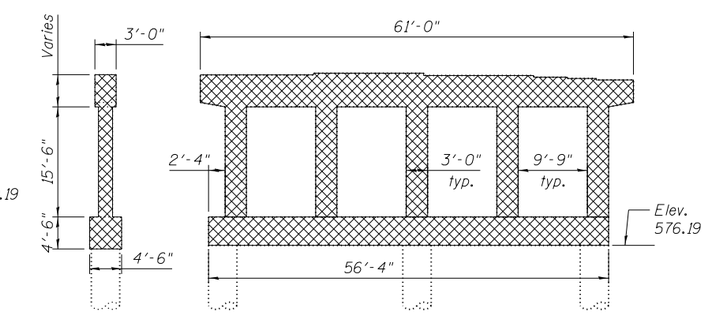

N

LEGEND:

Stage II Removal

0161704-60X75-S10-Removal.dgn

AECOM	USER NAME = floresg	DESIGNED - SD	REVISED
		CHECKED - JXH	REVISED
	PLOT SCALE = N.T.S.	DRAWN - GF	REVISED
	PLOT DATE = 6/28/2017	CHECKED - JXH	REVISED

STATE OF ILLINOIS
DEPARTMENT OF TRANSPORTATION

EXISTING STRUCTURE REMOVAL – 2
STRUCTURE NO. 016–1704
SHEET NO. S1-10 OF S1-52 SHEETS

F.A.I. RTE.	SECTION	COUNTY	TOTAL SHEETS	SHEET NO.
90/94/290	2014-001 R&B	COOK	696	231
		CONTRACT NO. 60X75		
		ILLINOIS FED. AID PROJECT		

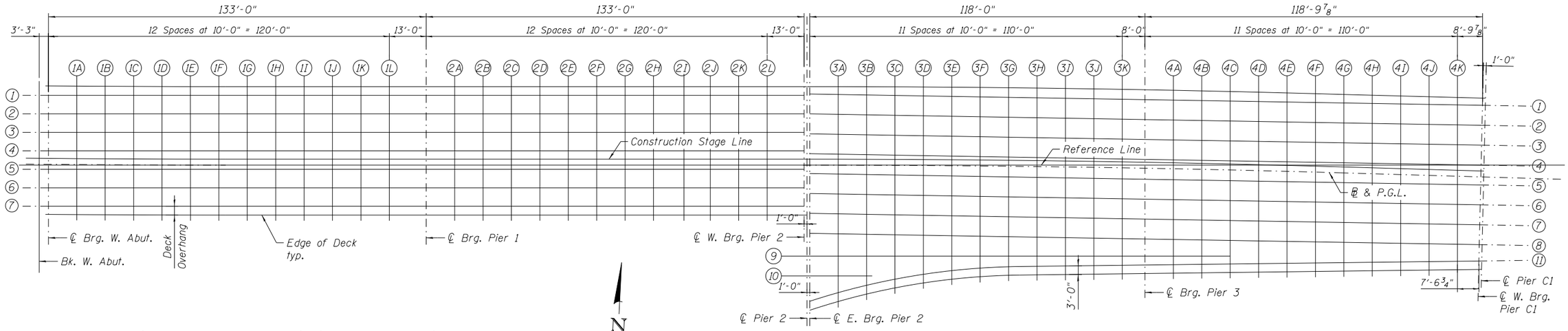

PLAN

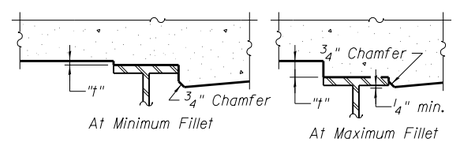

To determine "t": After all structural steel has been erected, elevations of the top flanges of the beams shall be taken at intervals shown above. These elevations subtracted from the "Theoretical Grade Elevations Adjusted for Dead Load Deflection" shown in Sheets S1-12 thru S1-15, minus slab thickness, equals the fillet heights "t" above top flange of beams.

FILLET HEIGHTS

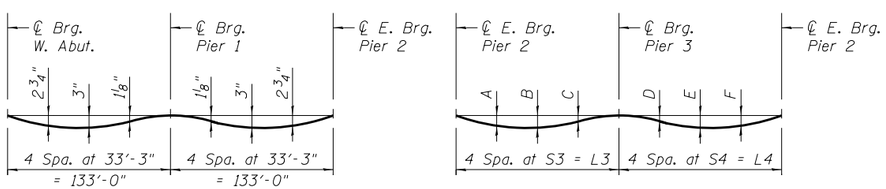

DEAD LOAD DEFLECTION DIAGRAM

(Includes weight of concrete only.)

Note:

The above deflections are not to be used in the field if the engineer is working from the grade elevations adjusted for dead load deflections as shown in Sheets S1-12 thru S1-15.

DECK OVERHANG DIMENSIONS NORTH - UNIT 1

Location	Station	Overhang
℄ Brg. W. Abut.	5155+59.09	3'-4 1/8"
1A	5155+69.13	3'-3 1/8"
1B	5155+79.16	3'-2 3/8"
1C	5155+89.19	3'-1 7/8"
1D	5155+99.22	3'-1 3/8"
1E	5156+09.25	3'-1 1/8"
1F to 1L	5156+19.29	3'-1"
℄ W. Brg. Pier 2	5158+25.29	3'-1"

DECK OVERHANG DIMENSIONS SOUTH - UNIT 1

Location	Station	Overhang
℄ Brg. W. Abut.	5155+59.41	2'-10"
1A	5155+69.39	2'-10 7/8"
1B	5155+79.37	2'-11 5/8"
1C	5155+89.36	3'-0 1/8"
1D	5155+99.34	3'-0 5/8"
1E	5156+09.32	3'-0 7/8"
1F to 1L	5156+19.30	3'-1"
℄ W. Brg. Pier 2	5158+25.29	3'-1"

DECK OVERHANG DIMENSIONS NORTH - UNIT 2

Location	Station	Overhang
℄ E. Brg. Pier 2	5158+27.28	2'-7"
3A	5158+37.24	2'-8 7/8"
3B	5158+47.20	2'-10 5/8"
3C	5158+57.17	3'-0 1/8"
3D	5158+67.13	3'-1 1/2"
3E	5158+77.09	3'-2 5/8"
3F	5158+87.06	3'-3 5/8"
3G	5158+97.02	3'-4 1/2"
3H	5159+06.99	3'-5 1/8"
3I	5159+16.95	3'-5 1/2"
3J	5159+26.92	3'-5 3/4"
3K	5159+36.88	3'-5 7/8"
℄ Brg. Pier 3	5159+44.85	3'-5 3/4"
4A	5159+54.82	3'-5 1/2"
4B	5159+64.78	3'-5 1/8"
4C	5159+74.75	3'-4 1/2"
4D	5159+84.71	3'-3 5/8"
4E	5159+94.68	3'-2 3/4"
4F	5160+04.64	3'-1 1/2"
4G	5160+14.61	3'-0 1/4"
4H	5160+24.61	2'-11 1/8"
4I	5160+34.61	2'-9 7/8"
4J	5160+44.61	2'-8 3/4"
4K	5160+54.61	2'-7 5/8"
℄ W. Brg. Pier C1	5160+63.43	2'-6 5/8"

DEAD LOAD DEFLECTIONS

Girder	A	B	C	S3	L3	D	E	F	S4	L4
1	1 7/8"	2 1/4"	7/8"	29.504'	118.017'	7/8"	2 1/4"	2"	29.710'	118.840'
2	1 7/8"	2 1/4"	7/8"	29.504'	118.017'	7/8"	2 1/4"	2"	29.670'	118.678'
3	1 7/8"	2 1/8"	7/8"	29.504'	118.017'	7/8"	2 1/4"	2"	29.629'	118.516'
4	1 7/8"	2 1/8"	3/4"	29.504'	118.017'	3/4"	2 1/8"	1 7/8"	29.586'	118.345'
5	1 3/4"	2 1/8"	7/8"	29.504'	118.017'	3/4"	2"	1 3/4"	29.548'	118.193'
6	1 7/8"	2 1/8"	7/8"	29.504'	118.017'	5/8"	1 3/4"	1 5/8"	29.508'	118.031'
7	2"	2 1/4"	1"	29.504'	118.017'	1/2"	1 5/8"	1 1/2"	29.467'	117.869'
8	2 1/8"	2 1/2"	1 1/8"	29.504'	118.017'	3/8"	1 3/8"	1 3/8"	29.427'	117.708'
9	2 1/8"	2 1/2"	1 1/8"	29.500'	118.000'	0"	0"	0"	7.500'	30.000'
10	1/2"	1"	1 3/8"	5.500'	22.000'					
11	2"	2 3/8"	1 1/8"	29.824'	119.295'	1/8"	1 1/8"	1 1/4"	29.392'	117.567'

GIRDER 1

Location	Station	Offset	Theoretical Grade Elevations	Theoretical Grade Elevations Adjusted for Dead Load Deflection
Bk. W. Abut.	5155+55.83	-24.22	591.73	591.73
℄ Brg. W. Abut.	5155+59.09	-24.24	591.86	591.86
1A	5155+69.13	-24.32	592.26	592.35
1B	5155+79.16	-24.38	592.66	592.82
1C	5155+89.19	-24.43	593.06	593.28
1D	5155+99.22	-24.47	593.47	593.73
1E	5156+09.25	-24.49	593.91	594.18
1F	5156+19.29	-24.50	594.35	594.62
1G	5156+29.29	-24.50	594.79	595.03
1H	5156+39.29	-24.50	595.23	595.43
1I	5156+49.29	-24.50	595.67	595.82
1J	5156+59.29	-24.50	596.11	596.20
1K	5156+69.29	-24.50	596.55	596.60
1L	5156+79.29	-24.50	596.99	597.00
℄ Brg. Pier 1	5156+92.29	-24.50	597.56	597.56
2A	5157+02.29	-24.50	598.00	598.01
2B	5157+12.29	-24.50	598.44	598.48
2C	5157+22.29	-24.50	598.88	598.96
2D	5157+32.29	-24.50	599.31	599.45
2E	5157+42.29	-24.50	599.75	599.94
2F	5157+52.29	-24.50	600.19	600.42
2G	5157+62.29	-24.50	600.62	600.88
2H	5157+72.29	-24.50	601.04	601.31
2I	5157+82.29	-24.50	601.46	601.72
2J	5157+92.29	-24.50	601.87	602.10
2K	5158+02.29	-24.50	602.27	602.45
2L	5158+12.29	-24.50	602.67	602.78
℄ W. Brg. Pier 2	5158+25.29	-24.50	603.18	603.18
℄ Pier 2	5158+26.29	-24.50	603.22	603.22

GIRDER 2

Location	Station	Offset	Theoretical Grade Elevations	Theoretical Grade Elevations Adjusted for Dead Load Deflection
Bk. W. Abut.	5155+55.89	-17.72	591.86	591.86
℄ Brg. W. Abut.	5155+59.15	-17.74	591.99	591.99
1A	5155+69.17	-17.82	592.39	592.48
1B	5155+79.19	-17.88	592.79	592.96
1C	5155+89.22	-17.93	593.19	593.41
1D	5155+99.24	-17.97	593.60	593.86
1E	5156+09.26	-17.99	594.03	594.30
1F	5156+19.29	-18.00	594.46	594.72
1G	5156+29.29	-18.00	594.89	595.13
1H	5156+39.29	-18.00	595.32	595.52
1I	5156+49.29	-18.00	595.74	595.89
1J	5156+59.29	-18.00	596.17	596.27
1K	5156+69.29	-18.00	596.60	596.65
1L	5156+79.29	-18.00	597.03	597.05
℄ Brg. Pier 1	5156+92.29	-18.00	597.59	597.59
2A	5157+02.29	-18.00	598.02	598.03
2B	5157+12.29	-18.00	598.45	598.49
2C	5157+22.29	-18.00	598.88	598.96
2D	5157+32.29	-18.00	599.31	599.44
2E	5157+42.29	-18.00	599.73	599.92
2F	5157+52.29	-18.00	600.16	600.39
2G	5157+62.29	-18.00	600.58	600.84
2H	5157+72.29	-18.00	600.99	601.26
2I	5157+82.29	-18.00	601.40	601.66
2J	5157+92.29	-18.00	601.80	602.03
2K	5158+02.29	-18.00	602.19	602.37
2L	5158+12.29	-18.00	602.58	602.69
℄ W. Brg. Pier 2	5158+25.29	-18.00	603.07	603.07
℄ Pier 2	5158+26.29	-18.00	603.11	603.11

GIRDER 3

Location	Station	Offset	Theoretical Grade Elevations	Theoretical Grade Elevations Adjusted for Dead Load Deflection
Bk. W. Abut.	5155+55.95	-11.22	592.00	592.00
℄ Brg. W. Abut.	5155+59.20	-11.24	592.13	592.13
1A	5155+69.22	-11.32	592.52	592.61
1B	5155+79.23	-11.38	592.92	593.09
1C	5155+89.25	-11.43	593.32	593.55
1D	5155+99.26	-11.47	593.73	593.99
1E	5156+09.28	-11.49	594.15	594.42
1F	5156+19.29	-11.50	594.57	594.83
1G	5156+29.29	-11.50	594.98	595.23
1H	5156+39.29	-11.50	595.40	595.60
1I	5156+49.29	-11.50	595.82	595.97
1J	5156+59.29	-11.50	596.24	596.34
1K	5156+69.29	-11.50	596.66	596.71
1L	5156+79.29	-11.50	597.08	597.10
℄ Brg. Pier 1	5156+92.29	-11.50	597.62	597.62
2A	5157+02.29	-11.50	598.04	598.05
2B	5157+12.29	-11.50	598.46	598.50
2C	5157+22.29	-11.50	598.88	598.96
2D	5157+32.29	-11.50	599.30	599.43
2E	5157+42.29	-11.50	599.72	599.90
2F	5157+52.29	-11.50	600.13	600.36
2G	5157+62.29	-11.50	600.54	600.80
2H	5157+72.29	-11.50	600.94	601.21
2I	5157+82.29	-11.50	601.34	601.60
2J	5157+92.29	-11.50	601.72	601.96
2K	5158+02.29	-11.50	602.11	602.29
2L	5158+12.29	-11.50	602.49	602.60
℄ W. Brg. Pier 2	5158+25.29	-11.50	602.97	602.97
℄ Pier 2	5158+26.29	-11.50	603.00	603.00

GIRDER 4

Location	Station	Offset	Theoretical Grade Elevations	Theoretical Grade Elevations Adjusted for Dead Load Deflection
Bk. W. Abut.	5155+56.00	-4.72	592.13	592.13
℄ Brg. W. Abut.	5155+59.25	-4.74	592.26	592.26
1A	5155+69.26	-4.82	592.66	592.74
1B	5155+79.27	-4.88	593.06	593.22
1C	5155+89.27	-4.93	593.46	593.68
1D	5155+99.28	-4.97	593.86	594.11
1E	5156+09.29	-4.99	594.26	594.54
1F	5156+19.29	-5.00	594.67	594.94
1G	5156+29.29	-5.00	595.08	595.32
1H	5156+39.29	-5.00	595.49	595.69
1I	5156+49.29	-5.00	595.90	596.05
1J	5156+59.29	-5.00	596.31	596.40
1K	5156+69.29	-5.00	596.72	596.77
1L	5156+79.29	-5.00	597.12	597.14
℄ Brg. Pier 1	5156+92.29	-5.00	597.65	597.65
2A	5157+02.29	-5.00	598.06	598.07
2B	5157+12.29	-5.00	598.47	598.51
2C	5157+22.29	-5.00	598.88	598.96
2D	5157+32.29	-5.00	599.29	599.42
2E	5157+42.29	-5.00	599.70	599.88
2F	5157+52.29	-5.00	600.10	600.33
2G	5157+62.29	-5.00	600.50	600.76
2H	5157+72.29	-5.00	600.89	601.16
2I	5157+82.29	-5.00	601.27	601.54
2J	5157+92.29	-5.00	601.65	601.89
2K	5158+02.29	-5.00	602.03	602.21
2L	5158+12.29	-5.00	602.39	602.50
℄ W. Brg. Pier 2	5158+25.29	-5.00	602.86	602.86
℄ Pier 2	5158+26.29	-5.00	602.90	602.90

STAGE CONSTRUCTION JOINT

Location	Station	Offset	Theoretical Grade Elevations	Theoretical Grade Elevations Adjusted for Dead Load Deflection
Bk. W. Abut.	5155+56.03	-2.08	592.18	592.18
℄ Brg. W. Abut.	5155+59.28	-2.08	592.31	592.31
1A	5155+69.28	-2.08	592.71	592.80
1B	5155+79.28	-2.08	593.11	593.28
1C	5155+89.29	-2.08	593.51	593.73
1D	5155+99.29	-2.08	593.91	594.17
1E	5156+09.29	-2.08	594.32	594.59
1F	5156+19.29	-2.08	594.72	594.99
1G	5156+29.29	-2.08	595.13	595.37
1H	5156+39.29	-2.08	595.53	595.73
1I	5156+49.29	-2.08	595.93	596.08
1J	5156+59.29	-2.08	596.34	596.43
1K	5156+69.29	-2.08	596.74	596.79
1L	5156+79.29	-2.08	597.14	597.16
℄ Brg. Pier 1	5156+92.29	-2.08	597.67	597.67
2A	5157+02.29	-2.08	598.07	598.08
2B	5157+12.29	-2.08	598.48	598.52
2C	5157+22.29	-2.08	598.88	598.96
2D	5157+32.29	-2.08	599.28	599.42
2E	5157+42.29	-2.08	599.69	599.87
2F	5157+52.29	-2.08	600.09	600.32
2G	5157+62.29	-2.08	600.48	600.74
2H	5157+72.29	-2.08	600.87	601.14
2I	5157+82.29	-2.08	601.25	601.51
2J	5157+92.29	-2.08	601.62	601.86
2K	5158+02.29	-2.08	601.99	602.17
2L	5158+12.29	-2.08	602.35	602.46
℄ W. Brg. Pier 2	5158+25.29	-2.08	602.81	602.81
℄ Pier 2	5158+26.29	-2.08	602.85	602.85

℄ & PROFILE GRADE LINE

Location	Station	Offset	Theoretical Grade Elevations	Theoretical Grade Elevations Adjusted for Dead Load Deflection
Bk. W. Abut.	5155+56.04	0.00	592.22	592.22
℄ Brg. W. Abut.	5155+59.29	0.00	592.35	592.35
1A	5155+69.29	0.00	592.75	592.84
1B	5155+79.29	0.00	593.15	593.32
1C	5155+89.29	0.00	593.56	593.78
1D	5155+99.29	0.00	593.96	594.21
1E	5156+09.29	0.00	594.36	594.63
1F	5156+19.29	0.00	594.76	595.02
1G	5156+29.29	0.00	595.16	595.40
1H	5156+39.29	0.00	595.56	595.76
1I	5156+49.29	0.00	595.96	596.11
1J	5156+59.29	0.00	596.36	596.45
1K	5156+69.29	0.00	596.76	596.81
1L	5156+79.29	0.00	597.16	597.18
℄ Brg. Pier 1	5156+92.29	0.00	597.68	597.68
2A	5157+02.29	0.00	598.08	598.09
2B	5157+12.29	0.00	598.48	598.52
2C	5157+22.29	0.00	598.88	598.96
2D	5157+32.29	0.00	599.28	599.41
2E	5157+42.29	0.00	599.68	599.87
2F	5157+52.29	0.00	600.08	600.31
2G	5157+62.29	0.00	600.47	600.73
2H	5157+72.29	0.00	600.85	601.12
2I	5157+82.29	0.00	601.23	601.49
2J	5157+92.29	0.00	601.60	601.83
2K	5158+02.29	0.00	601.96	602.15
2L	5158+12.29	0.00	602.32	602.43
℄ W. Brg. Pier 2	5158+25.29	0.00	602.78	602.78
℄ Pier 2	5158+26.29	0.00	602.82	602.82

GIRDER 5

Location	Station	Offset	Theoretical Grade Elevations	Theoretical Grade Elevations Adjusted for Dead Load Deflection
Bk. W. Abut.	5155+56.06	1.78	592.26	592.26
℄ Brg. W. Abut.	5155+59.31	1.76	592.39	592.39
1A	5155+69.31	1.68	592.79	592.88
1B	5155+79.30	1.62	593.19	593.35
1C	5155+89.30	1.57	593.59	593.81
1D	5155+99.30	1.53	593.99	594.24
1E	5156+09.30	1.51	594.38	594.66
1F	5156+19.29	1.50	594.78	595.05
1G	5156+29.29	1.50	595.18	595.42
1H	5156+39.29	1.50	595.58	595.78
1I	5156+49.29	1.50	595.98	596.12
1J	5156+59.29	1.50	596.37	596.47
1K	5156+69.29	1.50	596.77	596.82
1L	5156+79.29	1.50	597.17	597.19
℄ Brg. Pier 1	5156+92.29	1.50	597.69	597.69
2A	5157+02.29	1.50	598.08	598.10
2B	5157+12.29	1.50	598.48	598.52
2C	5157+22.29	1.50	598.88	598.96
2D	5157+32.29	1.50	599.28	599.41
2E	5157+42.29	1.50	599.68	599.86
2F	5157+52.29	1.50	600.07	600.30
2G	5157+62.29	1.50	600.46	600.72
2H	5157+72.29	1.50	600.84	601.11
2I	5157+82.29	1.50	601.21	601.48
2J	5157+92.29	1.50	601.58	601.82
2K	5158+02.29	1.50	601.95	602.13
2L	5158+12.29	1.50	602.30	602.41
℄ W. Brg. Pier 2	5158+25.29	1.50	602.76	602.76
℄ Pier 2	5158+26.29	1.50	602.79	602.79

GIRDER 6

Location	Station	Offset	Theoretical Grade Elevations	Theoretical Grade Elevations Adjusted for Dead Load Deflection
Bk. W. Abut.	5155+56.11	8.28	592.39	592.39
℄ Brg. W. Abut.	5155+59.36	8.26	592.52	592.52
1A	5155+69.35	8.18	592.92	593.01
1B	5155+79.34	8.12	593.32	593.48
1C	5155+89.33	8.07	593.72	593.94
1D	5155+99.32	8.03	594.12	594.37
1E	5156+09.31	8.01	594.50	594.78
1F	5156+19.30	8.00	594.89	595.16
1G	5156+29.29	8.00	595.28	595.52
1H	5156+39.29	8.00	595.66	595.86
1I	5156+49.29	8.00	596.05	596.20
1J	5156+59.29	8.00	596.44	596.54
1K	5156+69.29	8.00	596.83	596.88
1L	5156+79.29	8.00	597.21	597.23
℄ Brg. Pier 1	5156+92.29	8.00	597.72	597.72
2A	5157+02.29	8.00	598.11	598.12
2B	5157+12.29	8.00	598.49	598.53
2C	5157+22.29	8.00	598.88	598.96
2D	5157+32.29	8.00	599.27	599.40
2E	5157+42.29	8.00	599.66	599.84
2F	5157+52.29	8.00	600.04	600.27
2G	5157+62.29	8.00	600.42	600.68
2H	5157+72.29	8.00	600.79	601.06
2I	5157+82.29	8.00	601.15	601.42
2J	5157+92.29	8.00	601.51	601.75
2K	5158+02.29	8.00	601.86	602.05
2L	5158+12.29	8.00	602.21	602.32
℄ W. Brg. Pier 2	5158+25.29	8.00	602.65	602.65
℄ Pier 2	5158+26.30	8.00	602.68	602.68

GIRDER 7

Location	Station	Offset	Theoretical Grade Elevations	Theoretical Grade Elevations Adjusted for Dead Load Deflection
Bk. W. Abut.	5155+56.17	14.78	592.52	592.52
℄ Brg. W. Abut.	5155+59.41	14.75	592.65	592.65
1A	5155+69.39	14.68	593.05	593.14
1B	5155+79.37	14.62	593.45	593.61
1C	5155+89.36	14.57	593.85	594.07
1D	5155+99.34	14.53	594.24	594.50
1E	5156+09.32	14.51	594.62	594.89
1F	5156+19.30	14.50	595.00	595.26
1G	5156+29.29	14.50	595.37	595.62
1H	5156+39.29	14.50	595.75	595.95
1I	5156+49.29	14.50	596.13	596.28
1J	5156+59.29	14.50	596.51	596.60
1K	5156+69.29	14.50	596.88	596.94
1L	5156+79.29	14.50	597.26	597.28
℄ Brg. Pier 1	5156+92.29	14.50	597.75	597.75
2A	5157+02.29	14.50	598.13	598.14
2B	5157+12.29	14.50	598.51	598.55
2C	5157+22.29	14.50	598.88	598.96
2D	5157+32.29	14.50	599.26	599.39
2E	5157+42.29	14.50	599.64	599.82
2F	5157+52.29	14.50	600.01	600.24
2G	5157+62.29	14.50	600.38	600.64
2H	5157+72.29	14.50	600.74	601.01
2I	5157+82.29	14.50	601.09	601.36
2J	5157+92.29	14.50	601.44	601.67
2K	5158+02.29	14.50	601.78	601.96
2L	5158+12.29	14.50	602.12	602.23
℄ W. Brg. Pier 2	5158+25.29	14.50	602.55	602.55
℄ Pier 2	5158+26.30	14.50	602.58	602.58

GIRDER 1

Location	Station	Offset	Theoretical Grade Elevations	Theoretical Grade Elevations Adjusted for Dead Load Deflection
℄ Pier 2	5158+26.28	-25.02	603.22	603.22
℄ E. Brg. Pier 2	5158+27.28	-25.00	603.26	603.26
3A	5158+37.24	-24.84	603.64	603.71
3B	5158+47.20	-24.70	604.02	604.14
3C	5158+57.17	-24.57	604.35	604.52
3D	5158+67.13	-24.46	604.67	604.87
3E	5158+77.09	-24.36	604.99	605.19
3F	5158+87.06	-24.28	605.30	605.49
3G	5158+97.02	-24.21	605.60	605.76
3H	5159+06.99	-24.16	605.90	606.02
3I	5159+16.95	-24.12	606.19	606.26
3J	5159+26.92	-24.10	606.48	606.51
3K	5159+36.88	-24.10	606.76	606.77
℄ Brg. Pier 3	5159+44.85	-24.10	606.98	606.98
4A	5159+54.82	-24.12	607.25	607.27
4B	5159+64.78	-24.16	607.52	607.56
4C	5159+74.75	-24.21	607.78	607.86
4D	5159+84.71	-24.28	608.03	608.15
4E	5159+94.68	-24.36	608.26	608.42
4F	5160+04.64	-24.46	608.46	608.65
4G	5160+14.61	-24.57	608.65	608.86
4H	5160+24.61	-24.69	608.83	609.04
4I	5160+34.61	-24.81	609.01	609.19
4J	5160+44.61	-24.93	609.19	609.31
4K	5160+54.61	-25.05	609.35	609.42
℄ W. Brg. Pier C1	5160+63.43	-25.15	609.49	609.49
℄ Pier C1	5160+64.43	-25.16	609.51	609.51

GIRDER 2

Location	Station	Offset	Theoretical Grade Elevations	Theoretical Grade Elevations Adjusted for Dead Load Deflection
℄ Pier 2	5158+26.28	-18.02	603.11	603.11
℄ E. Brg. Pier 2	5158+27.28	-18.00	603.15	603.15
3A	5158+37.25	-17.84	603.52	603.59
3B	5158+47.23	-17.70	603.88	604.01
3C	5158+57.20	-17.57	604.21	604.38
3D	5158+67.18	-17.46	604.53	604.73
3E	5158+77.15	-17.36	604.85	605.05
3F	5158+87.12	-17.28	605.16	605.35
3G	5158+97.10	-17.21	605.47	605.62
3H	5159+07.07	-17.16	605.76	605.88
3I	5159+17.05	-17.13	606.06	606.13
3J	5159+27.03	-17.10	606.34	606.38
3K	5159+37.00	-17.10	606.63	606.63
℄ Brg. Pier 3	5159+44.98	-17.10	606.85	606.85
4A	5159+54.96	-17.13	607.12	607.13
4B	5159+64.93	-17.16	607.38	607.42
4C	5159+74.91	-17.21	607.64	607.72
4D	5159+84.88	-17.28	607.90	608.02
4E	5159+94.86	-17.36	608.13	608.29
4F	5160+04.83	-17.46	608.34	608.53
4G	5160+14.81	-17.57	608.54	608.75
4H	5160+24.81	-17.69	608.74	608.94
4I	5160+34.81	-17.81	608.93	609.11
4J	5160+44.81	-17.93	609.12	609.24
4K	5160+54.81	-18.05	609.30	609.36
℄ W. Brg. Pier C1	5160+63.47	-18.15	609.45	609.45
℄ Pier C1	5160+64.47	-18.16	609.46	609.46

GIRDER 3

Location	Station	Offset	Theoretical Grade Elevations	Theoretical Grade Elevations Adjusted for Dead Load Deflection
℄ Pier 2	5158+26.29	-11.02	603.00	603.00
℄ E. Brg. Pier 2	5158+27.28	-11.00	603.03	603.03
3A	5158+37.27	-10.84	603.39	603.46
3B	5158+47.25	-10.70	603.74	603.87
3C	5158+57.24	-10.57	604.07	604.24
3D	5158+67.22	-10.46	604.39	604.59
3E	5158+77.21	-10.36	604.71	604.91
3F	5158+87.19	-10.28	605.02	605.20
3G	5158+97.18	-10.21	605.33	605.48
3H	5159+07.16	-10.16	605.63	605.74
3I	5159+17.15	-10.13	605.92	605.99
3J	5159+27.13	-10.10	606.21	606.24
3K	5159+37.12	-10.10	606.49	606.50
℄ Brg. Pier 3	5159+45.11	-10.11	606.71	606.71
4A	5159+55.10	-10.13	606.98	606.99
4B	5159+65.08	-10.16	607.25	607.28
4C	5159+75.07	-10.22	607.51	607.58
4D	5159+85.05	-10.28	607.76	607.88
4E	5159+95.04	-10.37	608.00	608.16
4F	5160+05.02	-10.46	608.22	608.41
4G	5160+15.01	-10.58	608.44	608.64
4H	5160+25.01	-10.69	608.65	608.85
4I	5160+35.01	-10.81	608.85	609.02
4J	5160+45.01	-10.93	609.05	609.18
4K	5160+55.01	-11.05	609.24	609.31
℄ W. Brg. Pier C1	5160+63.51	-11.15	609.40	609.40
℄ Pier C1	5160+64.51	-11.16	609.42	609.42

GIRDER 4

Location	Station	Offset	Theoretical Grade Elevations	Theoretical Grade Elevations Adjusted for Dead Load Deflection
℄ Pier 2	5158+26.29	-4.02	602.88	602.88
℄ E. Brg. Pier 2	5158+27.29	-4.00	602.92	602.92
3A	5158+37.28	-3.84	603.26	603.33
3B	5158+47.27	-3.70	603.60	603.73
3C	5158+57.27	-3.57	603.93	604.09
3D	5158+67.27	-3.46	604.26	604.44
3E	5158+77.26	-3.36	604.57	604.76
3F	5158+87.26	-3.28	604.88	605.06
3G	5158+97.25	-3.21	605.19	605.34
3H	5159+07.25	-3.16	605.49	605.60
3I	5159+17.25	-3.13	605.78	605.85
3J	5159+27.24	-3.11	606.07	606.10
3K	5159+37.24	-3.10	606.35	606.36
℄ Brg. Pier 3	5159+45.24	-3.11	606.57	606.57
4A	5159+55.23	-3.13	606.85	606.86
4B	5159+65.23	-3.17	607.11	607.15
4C	5159+75.23	-3.22	607.37	607.44
4D	5159+85.22	-3.28	607.63	607.74
4E	5159+95.22	-3.37	607.87	608.02
4F	5160+05.21	-3.47	608.11	608.29
4G	5160+15.21	-3.58	608.34	608.53
4H	5160+25.21	-3.70	608.56	608.75
4I	5160+35.21	-3.82	608.78	608.94
4J	5160+45.21	-3.94	608.99	609.10
4K	5160+55.21	-4.05	609.19	609.25
℄ W. Brg. Pier C1	5160+63.55	-4.15	609.36	609.36
℄ Pier C1	5160+64.55	-4.17	609.37	609.37

STAGE CONSTRUCTION JOINT

Location	Station	Offset	Theoretical Grade Elevations	Theoretical Grade Elevations Adjusted for Dead Load Deflection
℄ Pier 2	5158+26.29	-2.08	602.85	602.85
℄ E. Brg. Pier 2	5158+27.29	-2.08	602.88	602.88
3A	5158+37.28	-2.08	603.23	603.30
3B	5158+47.28	-2.08	603.57	603.69
3C	5158+57.28	-2.08	603.90	604.07
3D	5158+67.27	-2.08	604.23	604.41
3E	5158+77.27	-2.08	604.55	604.74
3F	5158+87.27	-2.08	604.86	605.04
3G	5158+97.27	-2.08	605.17	605.31
3H	5159+07.26	-2.08	605.47	605.58
3I	5159+17.26	-2.08	605.76	605.83
3J	5159+27.26	-2.08	606.05	606.08
3K	5159+37.26	-2.08	606.33	606.34
℄ Brg. Pier 3	5159+45.26	-2.08	606.55	606.55
4A	5159+55.25	-2.08	606.83	606.83
4B	5159+65.25	-2.08	607.09	607.12
4C	5159+75.25	-2.08	607.35	607.42
4D	5159+85.25	-2.08	607.60	607.71
4E	5159+95.25	-2.08	607.85	608.00
4F	5160+05.25	-2.08	608.08	608.26
4G	5160+15.25	-2.08	608.31	608.51
4H	5160+25.26	-2.08	608.54	608.73
4I	5160+35.26	-2.08	608.76	608.92
4J	5160+45.27	-2.08	608.97	609.09
4K	5160+55.27	-2.08	609.18	609.23
℄ W. Brg. Pier C1	5160+63.56	-2.08	609.34	609.34
℄ Pier C1	5160+64.56	-2.08	609.36	609.36

℄ & PROFILE GRADE LINE

Location	Station	Offset	Theoretical Grade Elevations	Theoretical Grade Elevations Adjusted for Dead Load Deflection
℄ Pier 2	5158+26.29	0.00	602.82	602.82
℄ E. Brg. Pier 2	5158+27.29	0.00	602.85	602.85
3A	5158+37.29	0.00	603.19	603.26
3B	5158+47.29	0.00	603.53	603.65
3C	5158+57.29	0.00	603.86	604.02
3D	5158+67.29	0.00	604.19	604.37
3E	5158+77.29	0.00	604.51	604.70
3F	5158+87.29	0.00	604.82	605.00
3G	5158+97.29	0.00	605.13	605.27
3H	5159+07.29	0.00	605.43	605.54
3I	5159+17.29	0.00	605.72	605.79
3J	5159+27.29	0.00	606.01	606.04
3K	5159+37.29	0.00	606.29	606.30
℄ Brg. Pier 3	5159+45.29	0.00	606.51	606.51
4A	5159+55.30	0.00	606.79	606.79
4B	5159+65.30	0.00	607.05	607.08
4C	5159+75.30	0.00	607.31	607.38
4D	5159+85.30	0.00	607.56	607.67
4E	5159+95.31	0.00	607.81	607.96
4F	5160+05.31	0.00	608.05	608.23
4G	5160+15.31	0.00	608.28	608.48
4H	5160+25.32	0.00	608.51	608.70
4I	5160+35.32	0.00	608.73	608.89
4J	5160+45.33	0.00	608.95	609.07
4K	5160+55.33	0.00	609.16	609.22
℄ W. Brg. Pier C1	5160+63.58	0.00	609.33	609.33
℄ Pier C1	5160+64.58	0.00	609.35	609.35

GIRDER 5

Location	Station	Offset	Theoretical Grade Elevations	Theoretical Grade Elevations Adjusted for Dead Load Deflection
℄ Pier 2	5158+26.29	2.98	602.77	602.77
℄ E. Brg. Pier 2	5158+27.29	3.00	602.80	602.80
3A	5158+37.29	3.16	603.14	603.20
3B	5158+47.30	3.30	603.47	603.59
3C	5158+57.30	3.43	603.79	603.95
3D	5158+67.31	3.54	604.12	604.30
3E	5158+77.32	3.64	604.44	604.63
3F	5158+87.32	3.72	604.75	604.92
3G	5158+97.33	3.79	605.05	605.20
3H	5159+07.34	3.84	605.35	605.46
3I	5159+17.35	3.87	605.65	605.71
3J	5159+27.35	3.89	605.93	605.96
3K	5159+37.36	3.90	606.22	606.22
℄ Brg. Pier 3	5159+45.37	3.89	606.44	606.44
4A	5159+55.37	3.87	606.71	606.72
4B	5159+65.38	3.83	606.98	607.01
4C	5159+75.39	3.78	607.24	607.30
4D	5159+85.39	3.71	607.49	607.59
4E	5159+95.40	3.63	607.74	607.88
4F	5160+05.41	3.53	607.98	608.15
4G	5160+15.41	3.42	608.22	608.40
4H	5160+25.41	3.30	608.45	608.62
4I	5160+35.41	3.18	608.67	608.82
4J	5160+45.41	3.06	608.89	609.00
4K	5160+55.42	2.94	609.10	609.16
℄ W. Brg. Pier C1	5160+63.59	2.85	609.27	609.27
℄ Pier C1	5160+64.59	2.83	609.29	609.29

GIRDER 6

Location	Station	Offset	Theoretical Grade Elevations	Theoretical Grade Elevations Adjusted for Dead Load Deflection
℄ Pier 2	5158+26.29	9.98	602.65	602.65
℄ E. Brg. Pier 2	5158+27.29	10.00	602.68	602.68
3A	5158+37.31	10.16	603.01	603.08
3B	5158+47.32	10.30	603.33	603.45
3C	5158+57.34	10.43	603.66	603.82
3D	5158+67.36	10.54	603.98	604.17
3E	5158+77.37	10.64	604.30	604.49
3F	5158+87.39	10.72	604.61	604.79
3G	5158+97.41	10.79	604.91	605.07
3H	5159+07.43	10.84	605.21	605.33
3I	5159+17.44	10.87	605.51	605.58
3J	5159+27.46	10.89	605.80	605.83
3K	5159+37.48	10.90	606.08	606.09
℄ Brg. Pier 3	5159+45.49	10.89	606.30	606.30
4A	5159+55.51	10.87	606.57	606.58
4B	5159+65.53	10.83	606.84	606.87
4C	5159+75.55	10.78	607.10	607.16
4D	5159+85.57	10.71	607.35	607.45
4E	5159+95.58	10.63	607.60	607.73
4F	5160+05.60	10.53	607.85	608.00
4G	5160+15.61	10.42	608.08	608.25
4H	5160+25.62	10.30	608.31	608.48
4I	5160+35.62	10.18	608.54	608.68
4J	5160+45.62	10.06	608.75	608.86
4K	5160+55.62	9.94	608.97	609.02
℄ W. Brg. Pier C1	5160+63.63	9.84	609.13	609.13
℄ Pier C1	5160+64.63	9.83	609.15	609.15

GIRDER 7

Location	Station	Offset	Theoretical Grade Elevations	Theoretical Grade Elevations Adjusted for Dead Load Deflection
℄ Pier 2	5158+26.29	16.98	602.54	602.54
℄ E. Brg. Pier 2	5158+27.29	17.00	602.57	602.57
3A	5158+37.32	17.16	602.88	602.96
3B	5158+47.35	17.30	603.19	603.32
3C	5158+57.37	17.43	603.52	603.69
3D	5158+67.40	17.54	603.84	604.04
3E	5158+77.43	17.64	604.16	604.37
3F	5158+87.46	17.72	604.45	604.65
3G	5158+97.49	17.78	604.75	604.91
3H	5159+07.51	17.84	605.05	605.17
3I	5159+17.54	17.87	605.34	605.42
3J	5159+27.57	17.89	605.63	605.67
3K	5159+37.60	17.90	605.92	605.93
℄ Brg. Pier 3	5159+45.62	17.89	606.15	606.15
4A	5159+55.65	17.87	606.43	606.43
4B	5159+65.68	17.83	606.70	606.72
4C	5159+75.71	17.78	606.96	607.01
4D	5159+85.74	17.71	607.22	607.30
4E	5159+95.77	17.63	607.47	607.58
4F	5160+05.79	17.53	607.71	607.85
4G	5160+15.82	17.41	607.95	608.10
4H	5160+25.82	17.29	608.18	608.33
4I	5160+35.82	17.17	608.40	608.53
4J	5160+45.82	17.06	608.62	608.71
4K	5160+55.82	16.94	608.83	608.88
℄ W. Brg. Pier C1	5160+63.67	16.84	608.99	608.99
℄ Pier C1	5160+64.67	16.83	609.01	609.01

GIRDER 8

Location	Station	Offset	Theoretical Grade Elevations	Theoretical Grade Elevations Adjusted for Dead Load Deflection
℄ Pier 2	5158+26.29	23.98	602.42	602.42
℄ E. Brg. Pier 2	5158+27.30	24.00	602.45	602.45
3A	5158+37.33	24.16	602.76	602.84
3B	5158+47.37	24.30	603.02	603.16
3C	5158+57.41	24.43	603.24	603.43
3D	5158+67.45	24.54	603.50	603.72
3E	5158+77.49	24.64	603.79	604.01
3F	5158+87.52	24.72	604.10	604.30
3G	5158+97.56	24.78	604.43	604.60
3H	5159+07.60	24.84	604.76	604.89
3I	5159+17.64	24.87	605.09	605.17
3J	5159+27.68	24.89	605.41	605.45
3K	5159+37.72	24.90	605.73	605.74
℄ Brg. Pier 3	5159+45.75	24.89	605.98	605.98
4A	5159+55.79	24.87	606.29	606.28
4B	5159+65.83	24.83	606.57	606.58
4C	5159+75.87	24.78	606.83	606.86
4D	5159+85.91	24.71	607.08	607.15
4E	5159+95.95	24.62	607.33	607.43
4F	5160+05.99	24.52	607.57	607.70
4G	5160+16.02	24.41	607.81	607.95
4H	5160+26.02	24.29	608.04	608.18
4I	5160+36.02	24.17	608.27	608.39
4J	5160+46.02	24.05	608.48	608.57
4K	5160+56.02	23.93	608.70	608.74
℄ W. Brg. Pier C1	5160+63.71	23.84	608.85	608.85
℄ Pier C1	5160+64.71	23.83	608.87	608.87

GIRDER 9

Location	Station	Offset	Theoretical Grade Elevations	Theoretical Grade Elevations Adjusted for Dead Load Deflection
℄ Pier 2	5158+26.29	32.00	602.16	602.16
℄ E. Brg. Pier 2	5158+27.30	32.00	602.18	602.18
3A	5158+37.35	31.99	602.36	602.44
3B	5158+47.40	31.96	602.56	602.70
3C	5158+57.45	31.92	602.80	602.99
3D	5158+67.49	31.86	603.08	603.29
3E	5158+77.54	31.79	603.38	603.61
3F	5158+87.59	31.70	603.74	603.95
3G	5158+97.64	31.60	604.11	604.29
3H	5159+07.69	31.48	604.49	604.62
3I	5159+17.73	31.35	604.85	604.94
3J	5159+27.78	31.20	605.20	605.25
3K	5159+37.83	31.03	605.56	605.57
℄ Brg. Pier 3	5159+45.86	30.89	605.83	605.83
4A	5159+55.91	30.70	606.17	606.16
4B	5159+65.95	30.49	606.46	606.45
4C	5159+76.00	30.27	606.72	606.74

GIRDER 10

Location	Station	Offset	Theoretical Grade Elevations	Theoretical Grade Elevations Adjusted for Dead Load Deflection
℄ Pier 2	5158+26.30	39.00	601.78	601.78
℄ E. Brg. Pier 2	5158+27.30	39.00	601.80	601.80
3A	5158+37.36	38.99	601.96	601.98
3B	5158+47.42	38.96	602.14	602.17

GIRDER 11

Location	Station	Offset	Theoretical Grade Elevations	Theoretical Grade Elevations Adjusted for Dead Load Deflection
℄ Pier 2	5158+26.30	48.23	601.28	601.28
℄ E. Brg. Pier 2	5158+27.30	47.90	601.32	601.32
3A	5158+37.37	44.85	601.64	601.71
3B	5158+47.43	42.24	601.94	602.08
3C	5158+57.49	40.06	602.31	602.49
3D	5158+67.54	38.29	602.70	602.90
3E	5158+77.58	36.92	603.09	603.30
3F	5158+87.63	35.94	603.51	603.72
3G	5158+97.68	35.36	603.94	604.11
3H	5159+07.73	35.09	604.34	604.47
3I	5159+17.78	34.84	604.72	604.81
3J	5159+27.83	34.57	605.09	605.14
3K	5159+37.88	34.28	605.46	605.48
℄ Brg. Pier 3	5159+45.92	34.04	605.76	605.76
4A	5159+55.97	33.73	606.11	606.10
4B	5159+66.02	33.40	606.40	606.40
4C	5159+76.06	33.05	606.67	606.68
4D	5159+86.11	32.69	606.93	606.97
4E	5159+96.15	32.32	607.18	607.26
4F	5160+06.19	31.93	607.43	607.54
4G	5160+16.22	31.52	607.67	607.80
4H	5160+26.22	31.11	607.91	608.03
4I	5160+36.21	30.70	608.14	608.25
4J	5160+46.20	30.29	608.36	608.44
4K	5160+56.19	29.88	608.58	608.62
℄ W. Brg. Pier C1	5160+63.74	29.57	608.74	608.74
℄ Pier C1	5160+64.74	29.53	608.76	608.76

NORTH EDGE OF SHOULDER

Location	Station	Offset	Theoretical Grade Elevations
W. End of W. Appr. Slab	5155+26.22	-26.00	590.51
A	5155+36.25	-26.00	590.91
B	5155+46.29	-26.00	591.31
E. End of W. Appr. Slab	5155+56.32	-26.00	591.71

NORTH EDGE OF PAVEMENT

Location	Station	Offset	Theoretical Grade Elevations
W. End of W. Appr. Slab	5155+26.24	-24.00	590.55
A	5155+36.27	-24.00	590.95
B	5155+46.31	-24.00	591.35
E. End of W. Appr. Slab	5155+56.34	-24.00	591.76

STAGE CONSTRUCTION JOINT

Location	Station	Offset	Theoretical Grade Elevations
W. End of W. Appr. Slab	5155+26.52	-2.08	591.00
A	5155+36.52	-2.08	591.40
B	5155+46.52	-2.08	591.80
E. End of W. Appr. Slab	5155+56.53	-2.08	592.20

℄ ROADWAY & P.G.L.

Location	Station	Offset	Theoretical Grade Elevations
W. End of W. Appr. Slab	5155+26.54	0.00	591.04
A	5155+36.54	0.00	591.44
B	5155+46.54	0.00	591.84
E. End of W. Appr. Slab	5155+56.54	0.00	592.24

SOUTH EDGE OF PAVEMENT

Location	Station	Offset	Theoretical Grade Elevations
W. End of W. Appr. Slab	5155+26.69	12.00	591.29
A	5155+36.68	12.00	591.69
B	5155+46.66	12.00	592.09
E. End of W. Appr. Slab	5155+56.65	12.00	592.49

SOUTH EDGE OF SHOULDER

Location	Station	Offset	Theoretical Grade Elevations
W. End of W. Appr. Slab	5155+26.74	16.00	591.37
A	5155+36.72	16.00	591.77
B	5155+46.70	16.00	592.17
E. End of W. Appr. Slab	5155+56.68	16.00	592.57

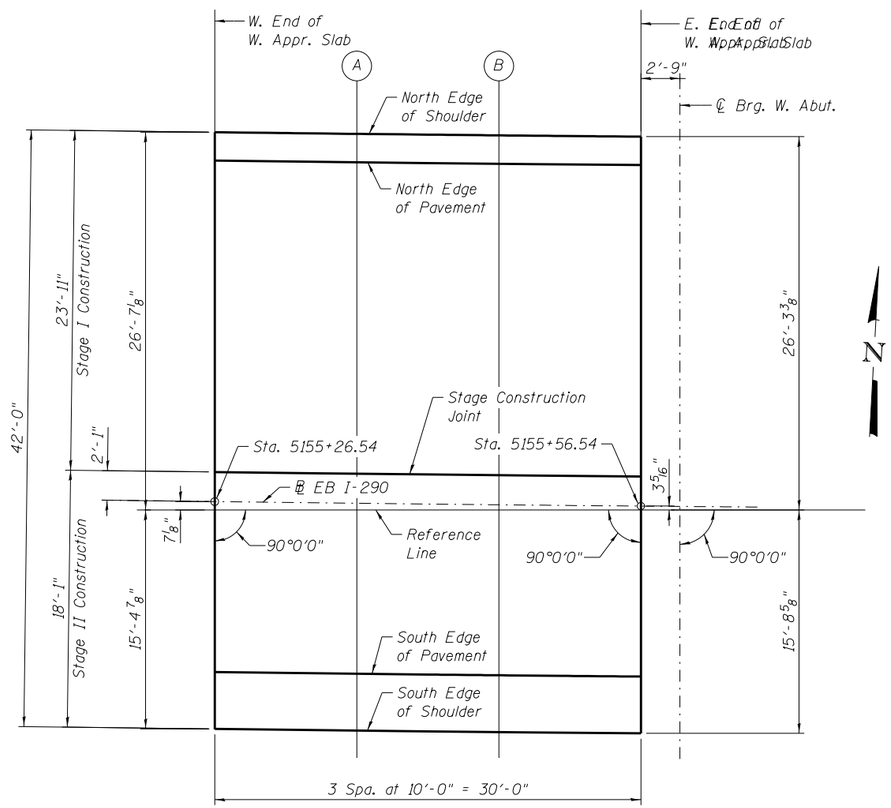

WEST APPROACH SLAB PLAN

0161704-60X75-S16-ApprSlabElev.dgn

AECOM	USER NAME = floresg	DESIGNED - JXH	REVISED
		CHECKED - ATB	REVISED
	PLOT SCALE = N.T.S.	DRAWN - JXH	REVISED
	PLOT DATE = 6/28/2017	CHECKED - ATB	REVISED

STATE OF ILLINOIS
DEPARTMENT OF TRANSPORTATION

TOP OF APPROACH SLAB ELEVATIONS
STRUCTURE NO. 016-1704

SHEET NO. S1-16 OF S1-52 SHEETS

F.A.I. RTE.	SECTION	COUNTY	TOTAL SHEETS	SHEET NO.
90/94/290	2014-001 R&B	COOK	696	237

CONTRACT NO. 60X75

ILLINOIS FED. AID PROJECT

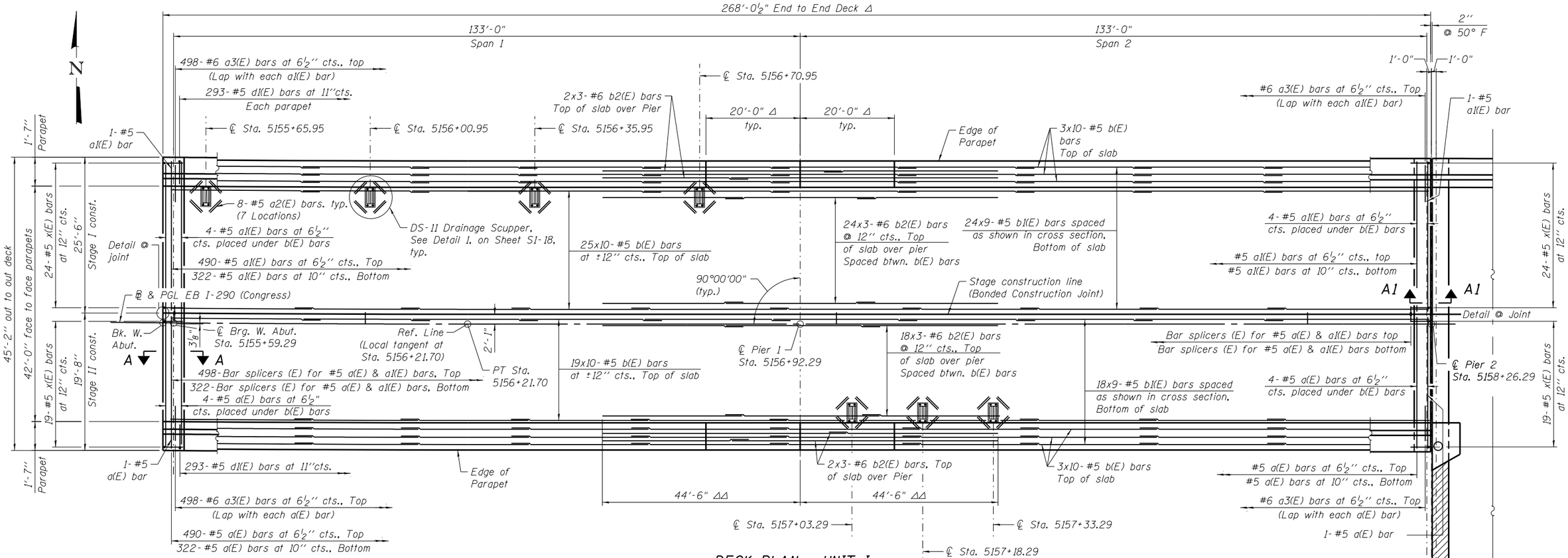

DECK PLAN - UNIT I

Δ Measured Along Inside Face of Parapet
ΔΔ Measured Along ℄ & PGL EB I-290

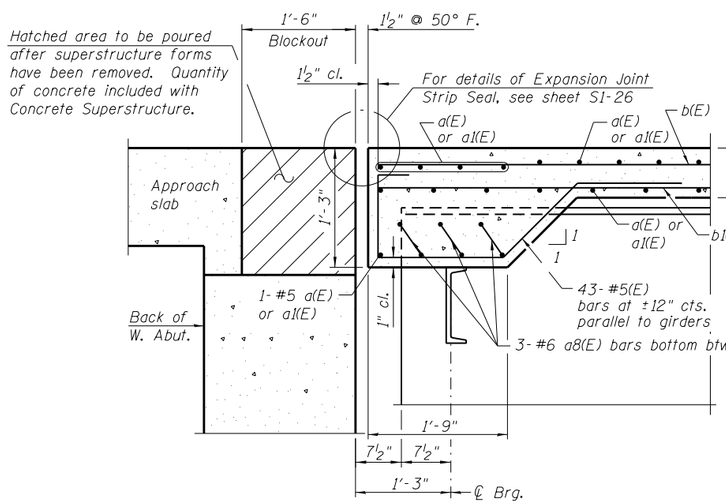

SECTION A-A

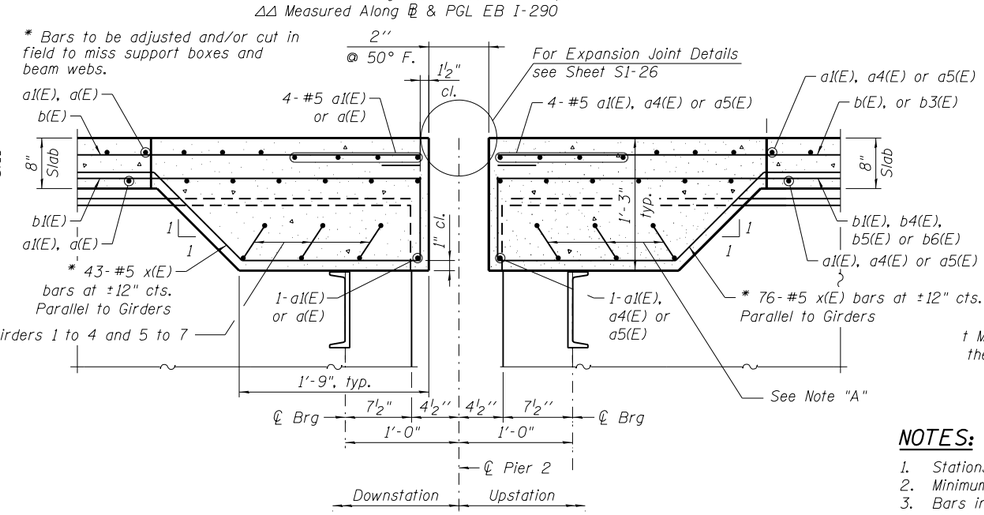

SECTION A1-A1

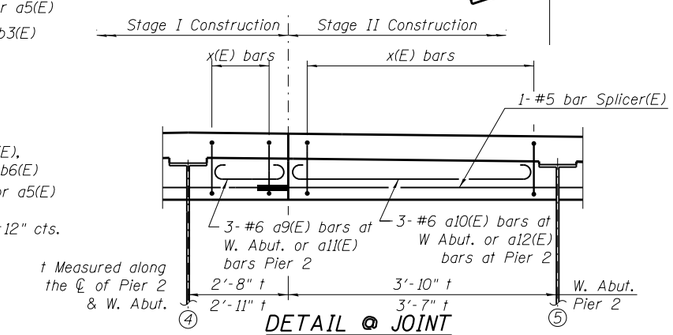

DETAIL @ JOINT

Bottom of concrete diaphragm & top of end diaphragm support member not shown for clarity. Bars in 8" slab not shown for clarity.

Note "A":

3-#6 a13(E) bars bottom btwn. Girders 1 to 4, 5 to 8 and 9 to 10 at Pier 2
3-#6 a13(E) bars bottom btwn. Girders 1 to 4 and 5 to 8 at Pier C1
3-#6 a14(E) bars bottom btwn. Girders 8 and 9 at Pier 2
3-#6 a15(E) bars bottom btwn. Girders 10 and 11 at Pier 2

NOTES:

1. Stations are along ℄ & PGL EB I-290 unless noted otherwise.
2. Minimum lap for #5 bars shall be 3'-6" and for #6 bars shall be 3'-7".
3. Bars indicated 41x12-#5 etc. indicates 41 lines of bars with 12 lengths per line.
4. Bend longitudinal reinforcement bars as required to fit in the field.
5. See Sheet S1-20 for deck cross section.
6. See Sheet S1-20 for Bill of Material.
7. Dimensions are based on a rolled rail strip seal joint. If the Contractor elects to use the welded rail strip seal joint, deck dimensions may require adjustments to satisfy the details on Sheet S1-26.

0161704-60X75-S17-DeckPlan-1.dgn

AECOM

USER NAME = floresg	DESIGNED - AYX	REVISED	
	CHECKED - AV	REVISED	
PLOT SCALE = N.T.S.	DRAWN - AYX	REVISED	
PLOT DATE = 6/28/2017	CHECKED - AV	REVISED	

STATE OF ILLINOIS
DEPARTMENT OF TRANSPORTATION

DECK PLAN – 1
STRUCTURE NO. 016–1704

SHEET NO. S1-17 OF S1-52 SHEETS

F.A.I. RTE.	SECTION	COUNTY	TOTAL SHEETS	SHEET NO.
90/94/290	2014-001 R&B	COOK	696	238
		CONTRACT NO. 60X75		
		ILLINOIS FED. AID PROJECT		

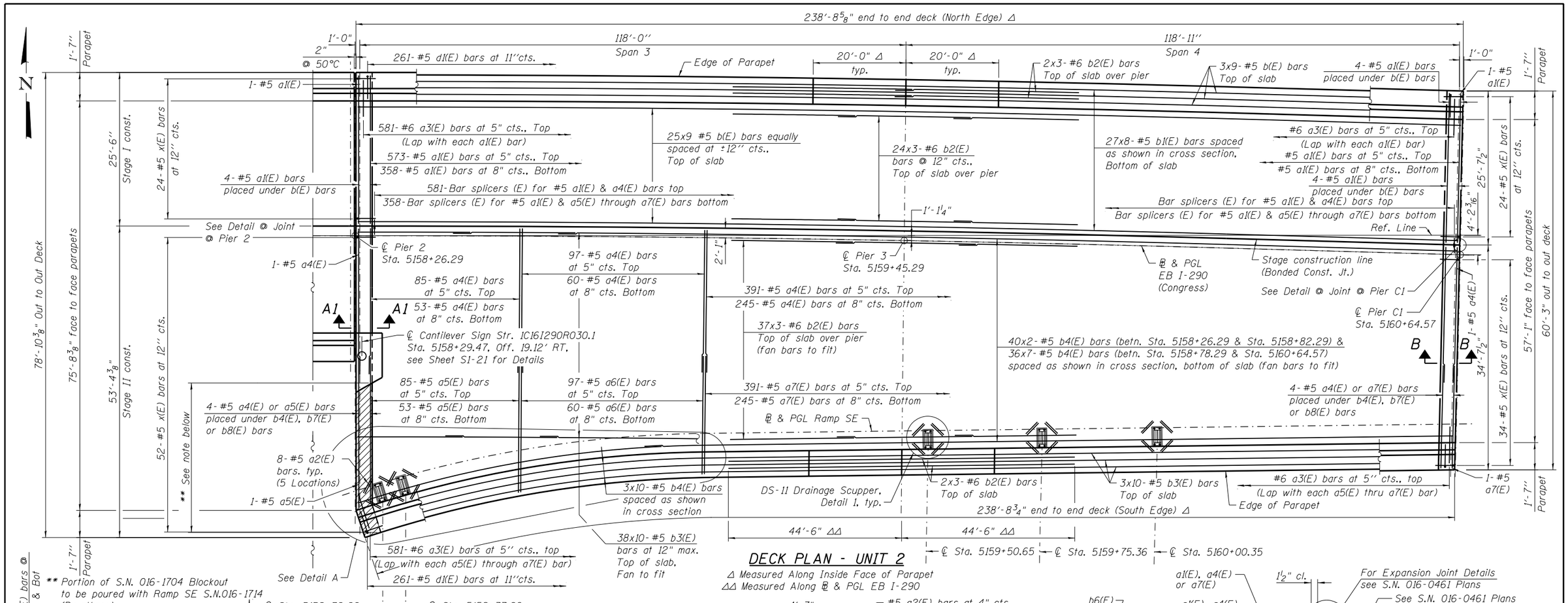

DECK PLAN - UNIT 2

Δ Measured Along Inside Face of Parapet
ΔΔ Measured Along ℄ & PGL EB I-290

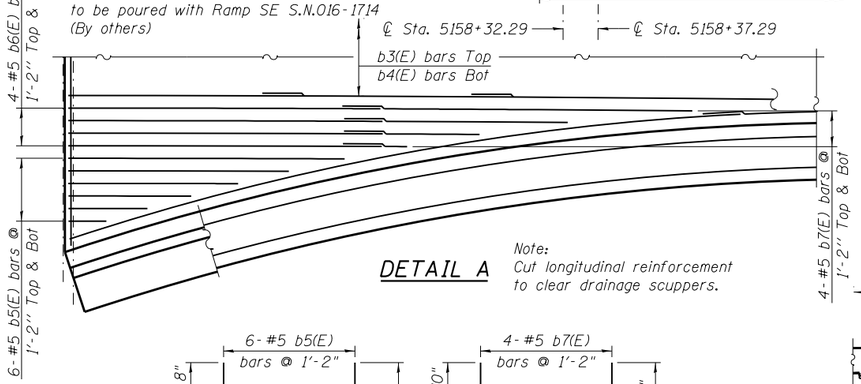

DETAIL A

Note:
Cut longitudinal reinforcement to clear drainage scuppers.

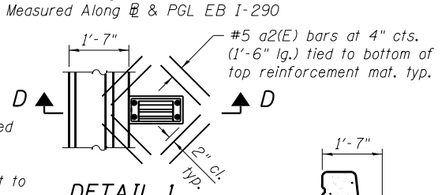

Note:
Reinforcement bars designated (E) shall be epoxy coated.

Cut longitudinal reinforcement to clear drainage scuppers.

DETAIL 1
DRAINAGE SCUPPER DS-11

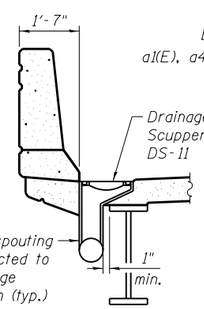

SECTION D-D

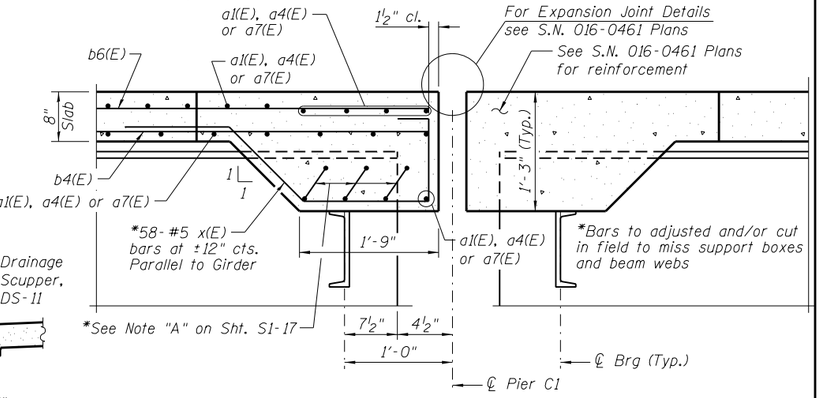

SECTION B-B

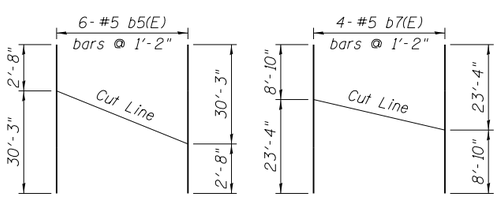

FIELD CUTTING DIAGRAM

Order b5(E) bars full length. Cut as shown, use at top of slab and use remainder of bars at bottom of slab.

FIELD CUTTING DIAGRAM

Order b6(E) bars full length. Cut as shown, use at top of slab and use remainder of bars at bottom of slab.

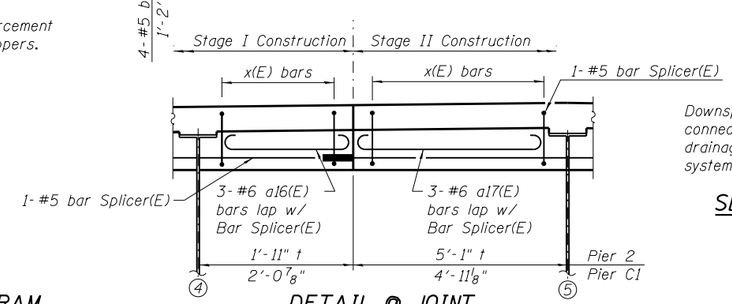

DETAIL @ JOINT

Bottom of concrete diaphragm & top of end diaphragm support member not shown for clarity. Bars in 8" slab not shown for clarity.

t Measured along the ℄ of Pier 2 & Pier C1

NOTES:

1. Stations are along ℄ & PGL EB I-290 unless noted otherwise.
2. Minimum lap for #5 bars shall be 3'-6" and for #6 bars shall be 3'-7".
3. Bars indicated 41x12-#5 etc. indicates 41 lines of bars with 12 lengths per line.
4. Bend longitudinal reinforcement bars as required to fit in the field.
5. See Sheet S1-20 for deck cross section.
6. See Sheet S1-20 for Bill of Material.
7. Dimensions are based on a rolled rail strip seal joint. If the Contractor elects to use the welded rail strip seal joint, deck dimensions may require adjustments to satisfy the details on Sheet S1-26.

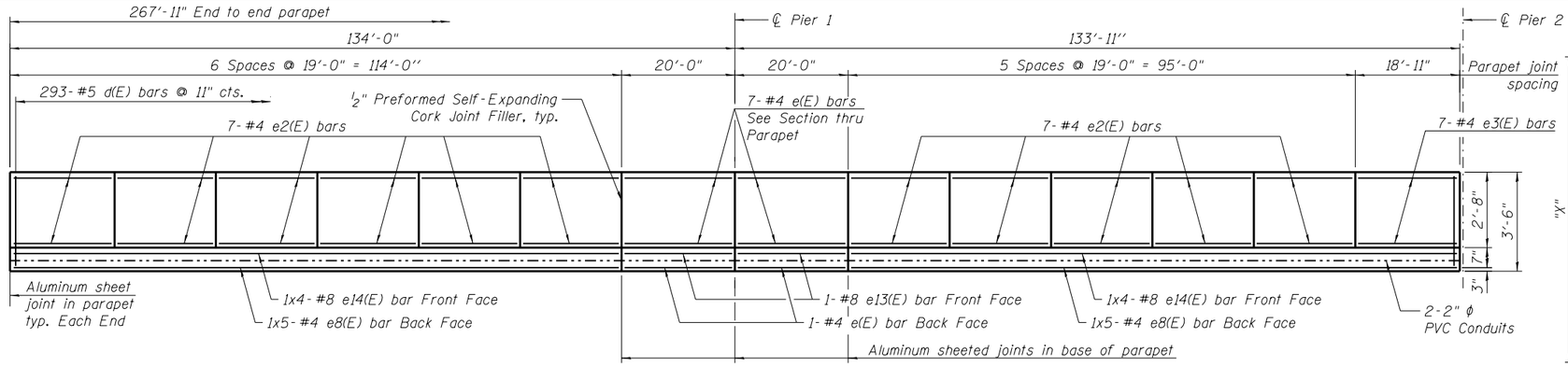

INSIDE ELEVATION OF NORTH PARAPET - UNIT 1

(South parapet similar)

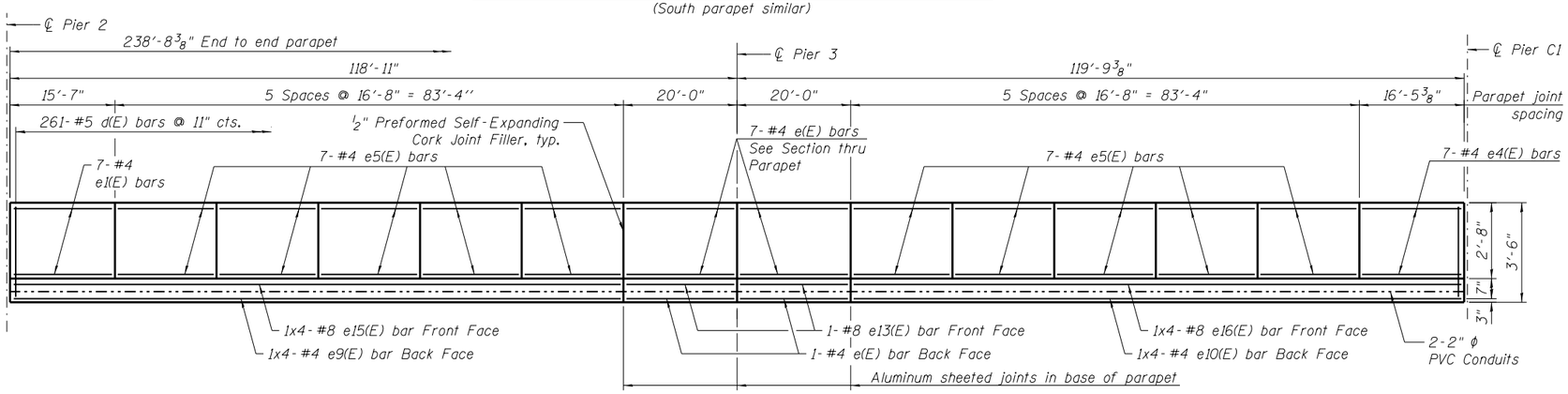

INSIDE ELEVATION OF NORTH PARAPET - UNIT 2

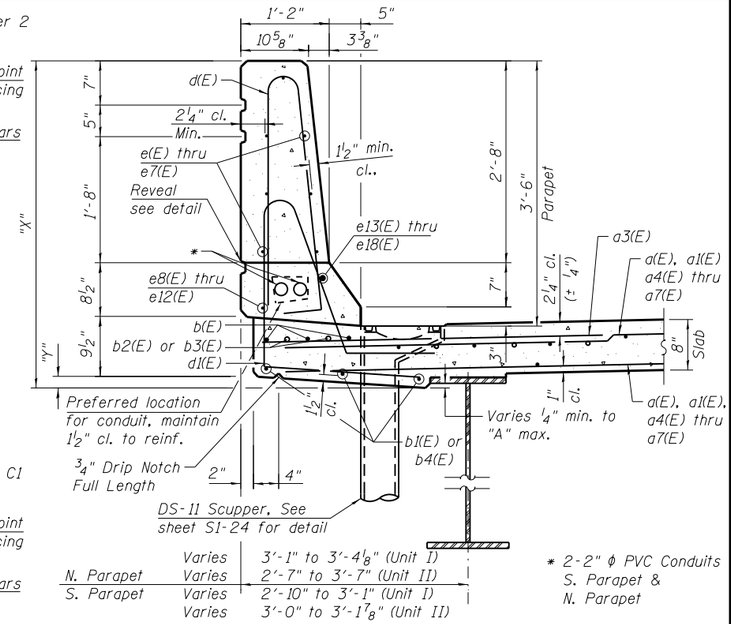

SECTION THRU PARAPET

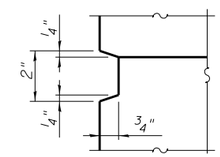

REVEAL DETAIL

PARAPET DIMENSION TABLE

	A	X	Y
Unit I-N. Parapet	2 1/2"	4'-6 5/8"	4 5/8"
Unit I-S. Parapet	3"	4'-6 1/4"	4 1/4"
Unit II-N. Parapet	2 5/8"	4'-6 1/2"	4 1/2"
Unit II-S. Parapet	2 7/8"	4'-6"	4"

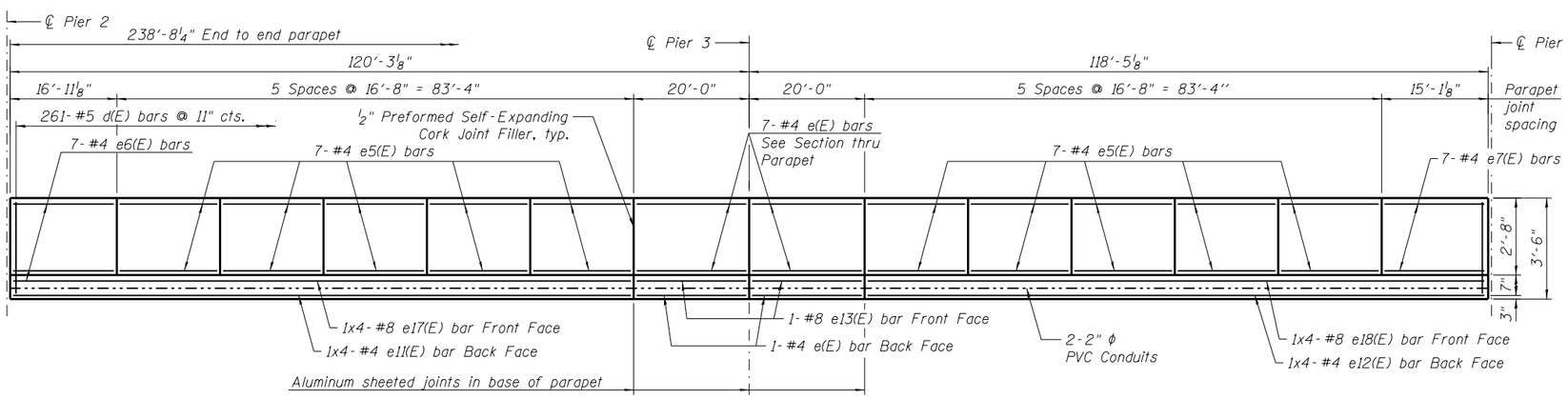

INSIDE ELEVATION OF SOUTH PARAPET - UNIT 2

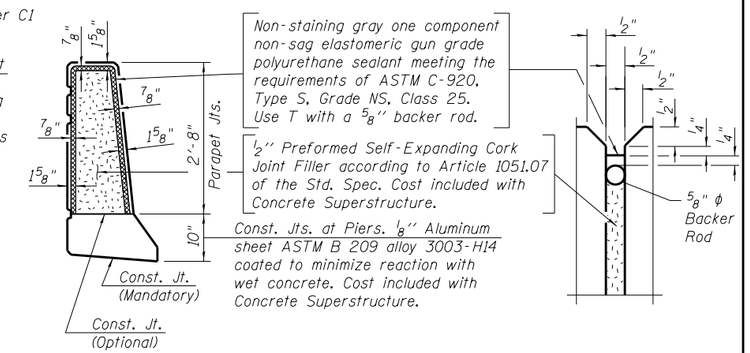

PARAPET JOINT DETAILS

MINIMUM BAR LAP

(Parapet)

#4 bar = 2'-8"

#8 bar = 5'-11"

NOTES:

1. Contractor to provide expansion/deflection conduit fittings at all structural expansion joints. See lighting plans for expansion/deflection fitting installation details.
2. Bars indicated Locations: 1x4-#8 etc., indicates one line of bars with 4 lengths per line.

0161704-60X75-S19-DeckDetail-1.dgn

AECOM

USER NAME = floresg	DESIGNED - AYX	REVISED	
	CHECKED - AV	REVISED	
PLOT SCALE = N.T.S.	DRAWN - AYX	REVISED	
PLOT DATE = 6/28/2017	CHECKED - AV	REVISED	

STATE OF ILLINOIS
DEPARTMENT OF TRANSPORTATION

DECK DETAILS - 1
STRUCTURE NO. 016-1704

SHEET NO. S1-19 OF S1-52 SHEETS

F.A.I. RTE.	SECTION	COUNTY	TOTAL SHEETS	SHEET NO.
90/94/290	2014-001 R&B	COOK	696	240
		CONTRACT NO. 60X75		
		ILLINOIS FED. AID PROJECT		

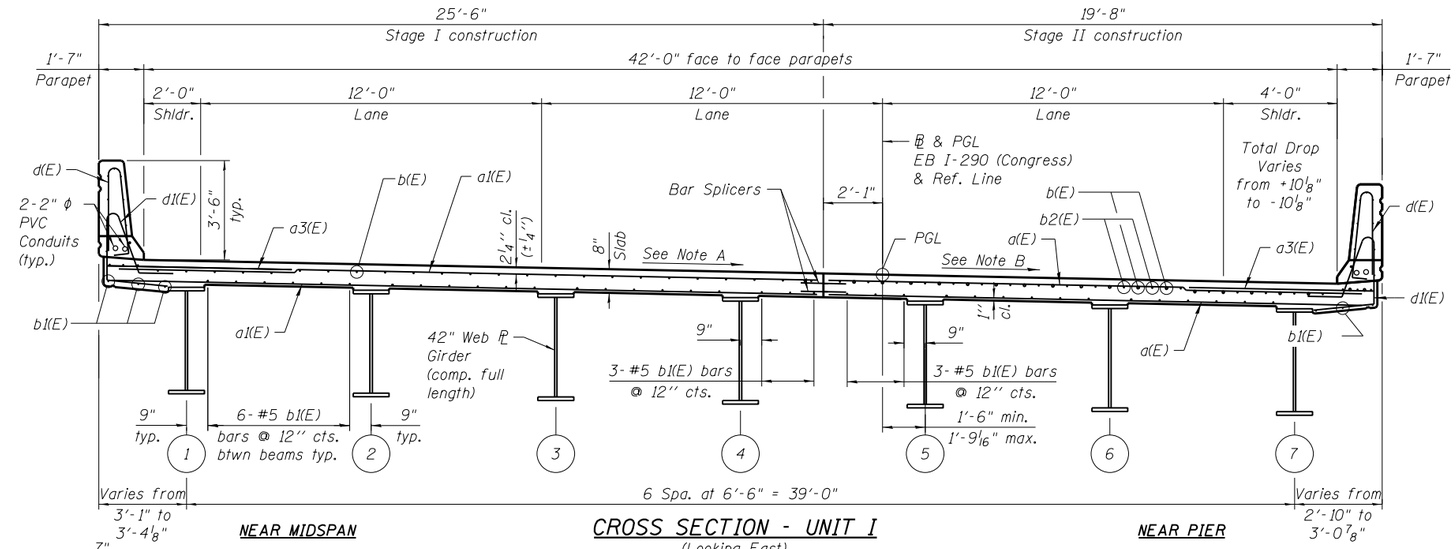

CROSS SECTION - UNIT I

(Looking East)

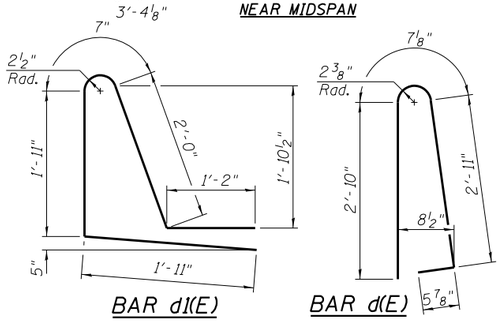

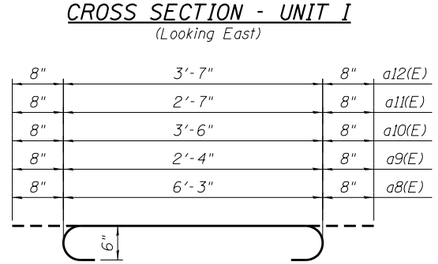

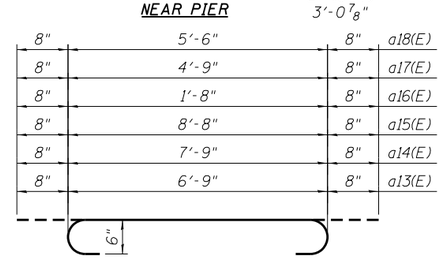

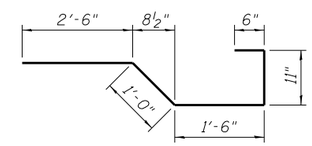

NOTES:

1. For Deck overhang dimensions, see Sheet S1-11.

Note A: (Direction of slope referenced from left edge of pavement)
Constant cross slope (2.00%) Sta. 5155+23.00 to Sta. 5155+98.00
Transition (2.00% to -2.00%) Sta. 5155+98.00 to Sta. 5157+49.00
Constant cross slope (-2.00%) Sta. 5157+49.00 to Sta. 5159+90.00
Transition (-2.00% to -0.65%) Sta. 5159+90.00 to Sta. 5160+64.44

Note B: (Direction of slope referenced from ℄ EB Congress)
Constant cross slope (2.00%) Sta. 5155+23.00 to Sta. 5155+98.00
Transition (2.00% to -2.00%) Sta. 5155+98.00 to Sta. 5157+49.00
Constant cross slope (-2.00%) Sta. 5157+49.00 to Sta. 5160+64.44

Note C: (Direction of slope referenced from right edge of pavement.
All stations are given along the baseline of Ramp SE.)
Transition (4.40% to 5.40%) Sta. 1412+20.00 to Sta. 1412+43.00
Full S.E. (5.40%) Sta. 1412+43.00 to Sta. 1412+73.00
Transition (5.40% to 2.00%) Sta. 1412+73.00 to Sta. 1413+51.00
Constant cross slope (2.00%) Sta. 1413+51.00 to Sta. 1413+56.70

SUPERSTRUCTURE BILL OF MATERIAL

Bar	No.	Size	Length	Shape
a(E)	822	#5	19'-2"	
a1(E)	1763	#5	25'-0"	
a2(E)	96	#5	1'-6"	
a3(E)	2158	#6	6'-6"	
a4(E)	941	#5	27'-10"	
a5(E)	143	#5	28'-8"	
a6(E)	157	#5	19'-10"	
a7(E)	641	#5	15'-10"	
a8(E)	36	#6	7'-7"	
a9(E)	3	#6	3'-8"	
a10(E)	3	#6	4'-10"	
a11(E)	3	#6	3'-11"	
a12(E)	3	#6	4'-11"	
a13(E)	39	#6	8'-1"	
a14(E)	3	#6	9'-1"	
a15(E)	3	#6	10'-0"	
a16(E)	6	#6	3'-0"	
a17(E)	6	#6	6'-1"	
a18(E)	3	#6	4'-8"	
b(E)	752	#5	30'-3"	
b1(E)	594	#5	33'-3"	
b2(E)	333	#6	32'-1"	
b3(E)	410	#5	27'-5"	
b4(E)	362	#5	30'-0"	
b5(E)	6	#5	32'-11"	
b6(E)	8	#5	33'-3"	
b7(E)	4	#5	32'-2"	
d(E)	1108	#5	6'-10"	
d1(E)	1108	#5	7'-7"	
e(E)	64	#4	19'-8"	
e1(E)	7	#4	15'-3"	
e2(E)	154	#4	18'-8"	
e3(E)	14	#4	18'-7"	
e4(E)	7	#4	16'-1"	
e5(E)	140	#4	16'-4"	
e6(E)	7	#4	16'-7"	
e7(E)	7	#4	14'-9"	
e8(E)	20	#4	25'-5"	
e9(E)	4	#4	27'-4"	
e10(E)	4	#4	27'-6"	
e11(E)	4	#4	27'-9"	
e12(E)	4	#4	27'-3"	
e13(E)	8	#8	19'-8"	
e14(E)	16	#8	34'-4"	
e15(E)	4	#8	30'-7"	
e16(E)	4	#8	30'-9"	
e17(E)	4	#8	30'-11"	
e18(E)	4	#8	30'-6"	
x(E)	220	#5	6'-5"	
Reinforcement Bars, Epoxy Coated			Pound	240,960
Concrete Superstructure			Cu. Yd.	965.0
Protective Coat			Sq. Yd.	4117
Bridge Deck Grooving			Sq. Yd.	3231

Bars indicated thus 1 x 2-#8 etc. indicates 1 line of bars with 2 lengths per line.

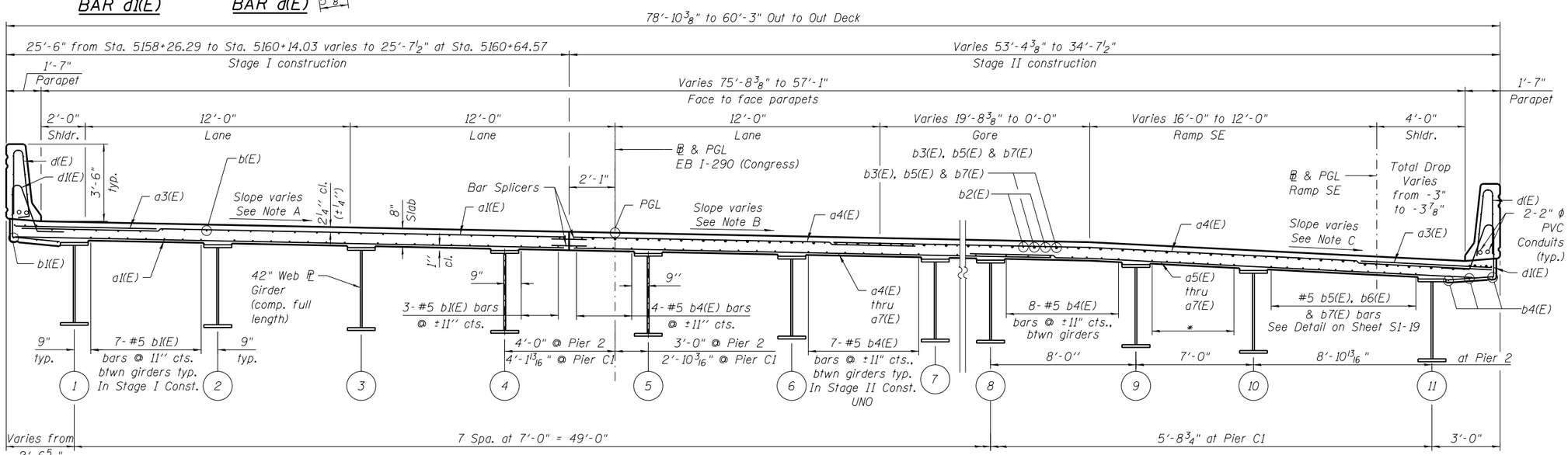

CROSS SECTION - UNIT 2

(Looking East)

* 7-#5 b4(E) bars in between girders from Sta. 5158+26.29 to Sta. 5158+82.29
3-#5 b4(E) bars in between girders from Sta. 5158+78.29 to Sta. 5160+64.57

0161704-60X75-S20-DeckDetail-2.dgn

AECOM

USER NAME = floresg	DESIGNED - AYX	REVISED	
	CHECKED - AV	REVISED	
PLOT SCALE = N.T.S.	DRAWN - AYX	REVISED	
PLOT DATE = 6/28/2017	CHECKED - AV	REVISED	

STATE OF ILLINOIS
DEPARTMENT OF TRANSPORTATION

DECK DETAILS – 2
STRUCTURE NO. 016–1704
SHEET NO. S1-20 OF S1-52 SHEETS

F.A.I. RTE.	SECTION	COUNTY	TOTAL SHEETS	SHEET NO.
90/94/290	2014-001 R&B	COOK	696	241
		CONTRACT NO. 60X75		
		ILLINOIS FED. AID PROJECT		

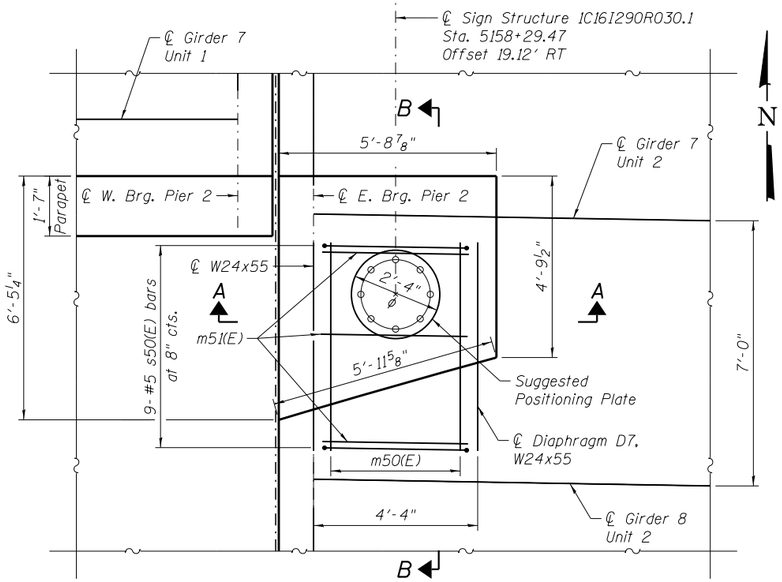

PLAN AT SIGN STRUCTURE POST

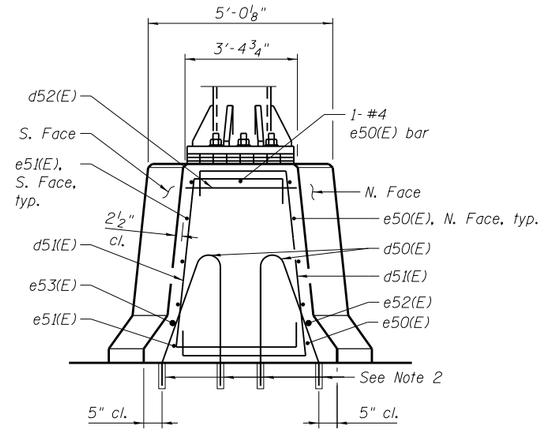

VIEW C-C

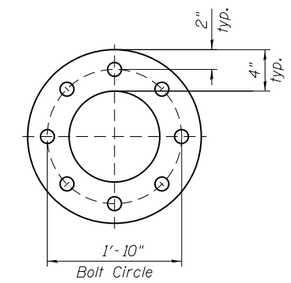

SUGGESTED POSITIONING PLATE

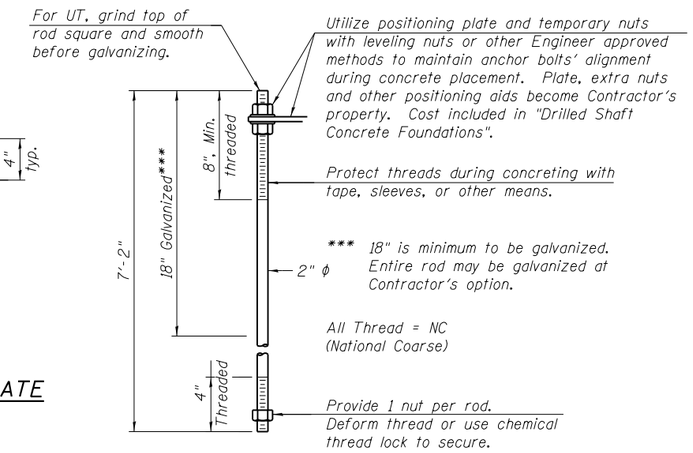

ANCHOR ROD DETAIL

(8 Total)

Anchor rods shall conform to ASTM F1554 Grade 105. Galvanize the upper 18" (minimum***) and associated AASHTO M291, Grade A, C or DH heavy hex nuts and hardened washers per AASHTO M232. No welding shall be permitted on rods. Provide a nut at bottom, a hexagon locknut and washer above base plate and a leveling nut and washer below base plate. Nuts shall each be tightened with 200 lb.-ft. minimum torque against base plate. Before or after threading, but before galvanizing, each anchor rod shall be ultrasonically tested (UT) by a Level II or III inspector, qualified in accord with ANSI guidelines, to insure no rejectable flaws exist in the upper 18" (tension criteria). Cost included in Concrete Superstructure.

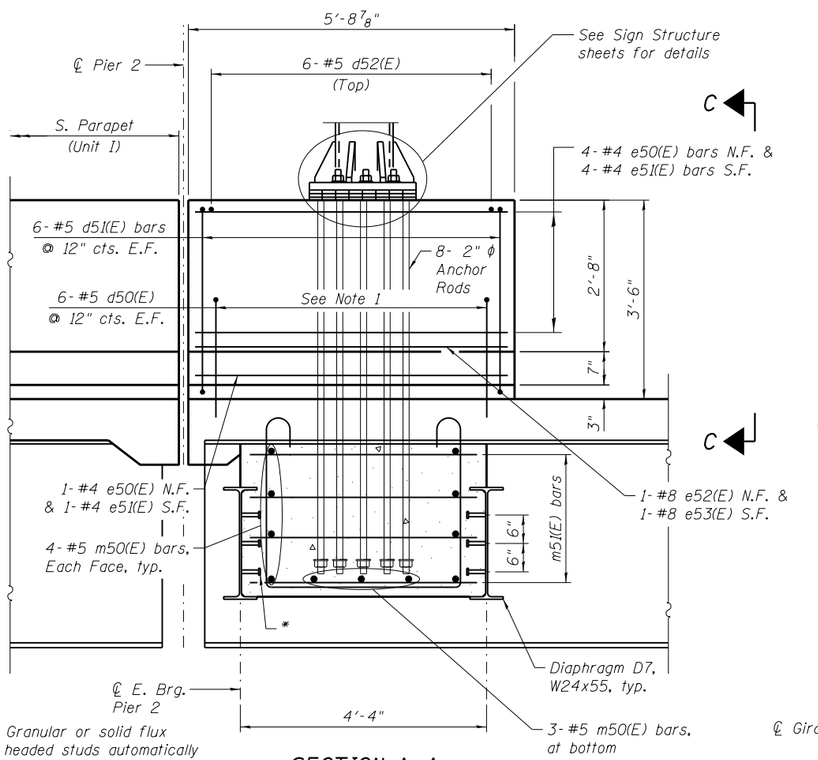

* 3/4" ϕ Granular or solid flux filled headed studs automatically end welded to web, typ. (No. required = 36)

SECTION A-A

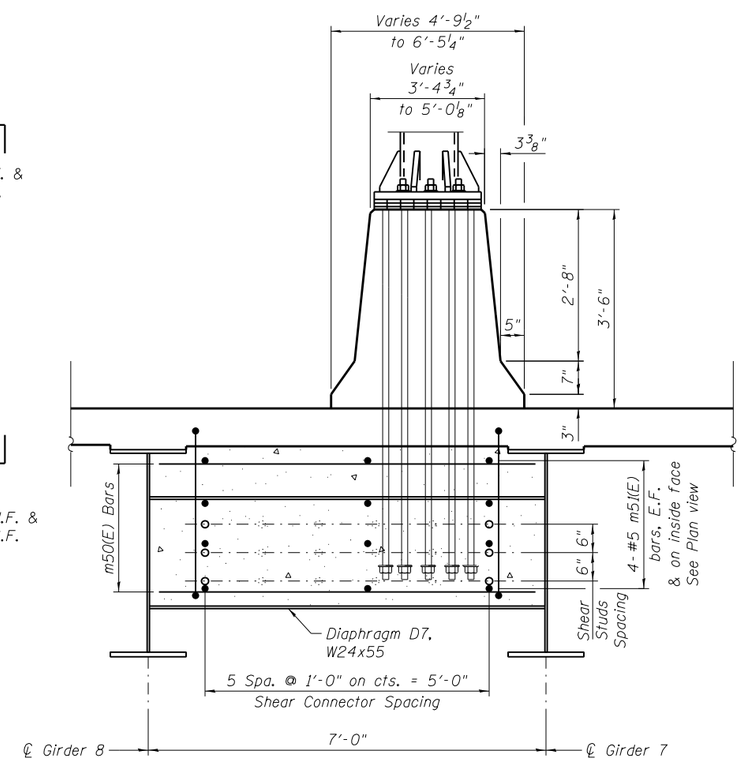

SECTION B-B

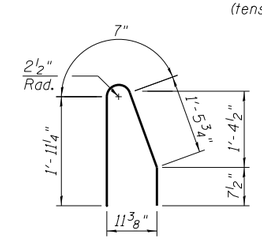

BAR d50(E)

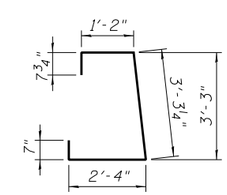

BAR d51(E)

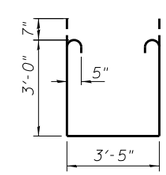

BAR s50(E)

BILL OF MATERIAL

Bar	No.	Size	Length	Shape
d50(E)	12	#5	4'-8"	
d51(E)	12	#5	8'-0"	
d52(E)	6	#5	3'-0"	
e50(E)	6	#4	5'-4"	
e51(E)	5	#4	5'-7"	
e52(E)	1	#8	5'-4"	
e53(E)	1	#8	5'-7"	
m50(E)	11	#5	6'-8"	
m51(E)	12	#5	4'-0"	
s50(E)	9	#5	10'-7"	
Concrete Superstructure			Cu. Yd.	3.5
Reinforcement Bars, Epoxy Coated			Pound	480
Protective Coat			Sq. Yd.	9

NOTES:

1. Bend longitudinal reinforcement bars as required to fit in the field.
2. Core and set #5 d50(E) bars according to Article 509.06 of the Standard Specifications. Cored holes shall be roughned or scored as per manufacturer's recommendation. Maximum depth of hole shall not exceed 6". Cost included with Reinforcement Bars, Epoxy Coated.
3. See Sheet S1-18 for location of the Cantilevered Sign Structure Support.
4. See Sheet S1-32 for Diaphragm D7 notes and details.
5. Cost of Anchor Rods is included with Concrete Superstructure.

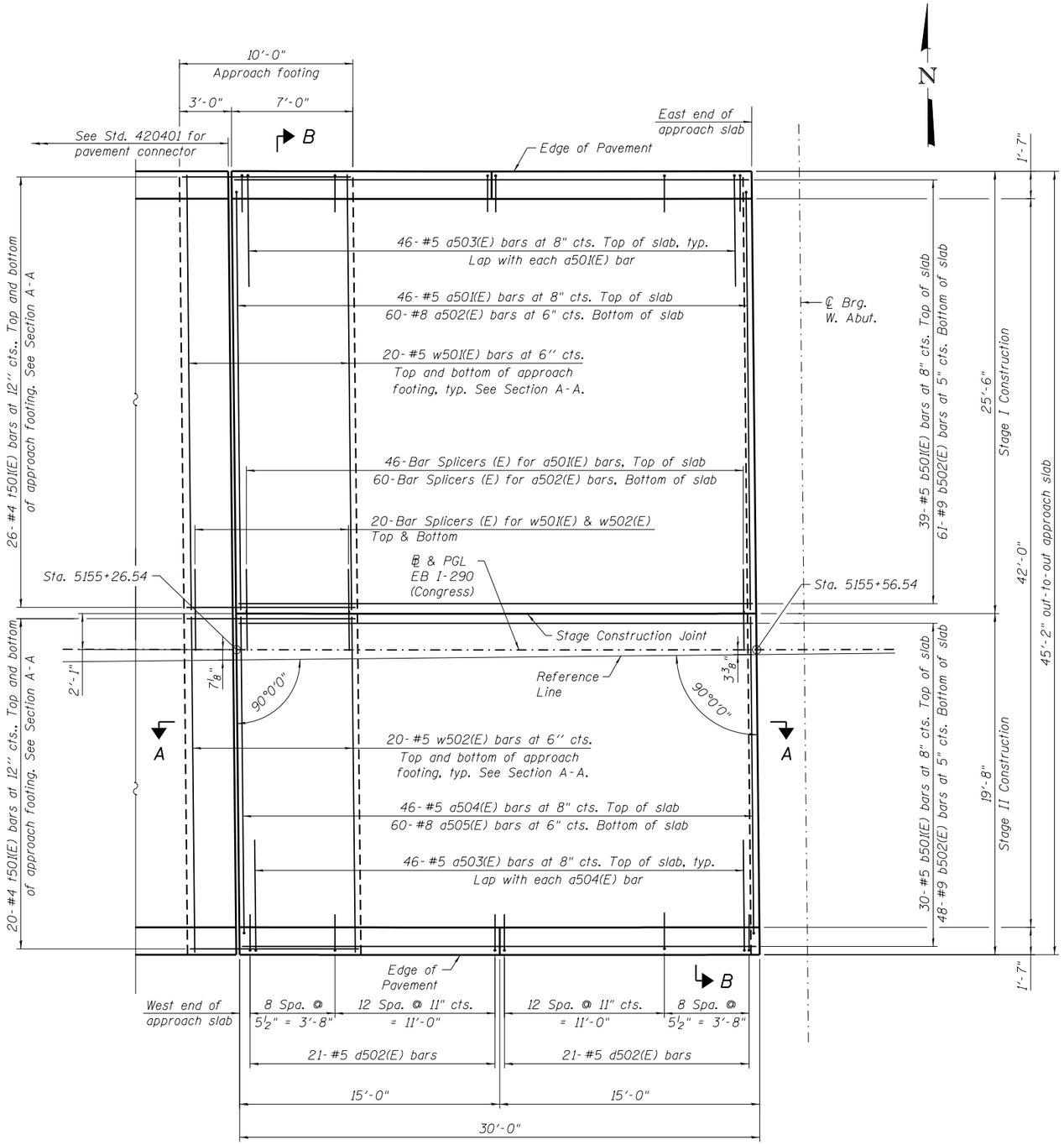

PLAN

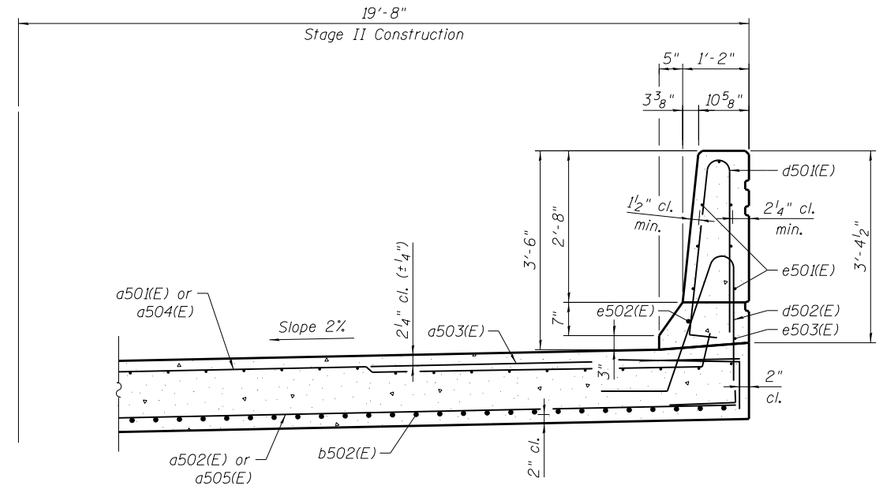

NEAR ABUTMENT

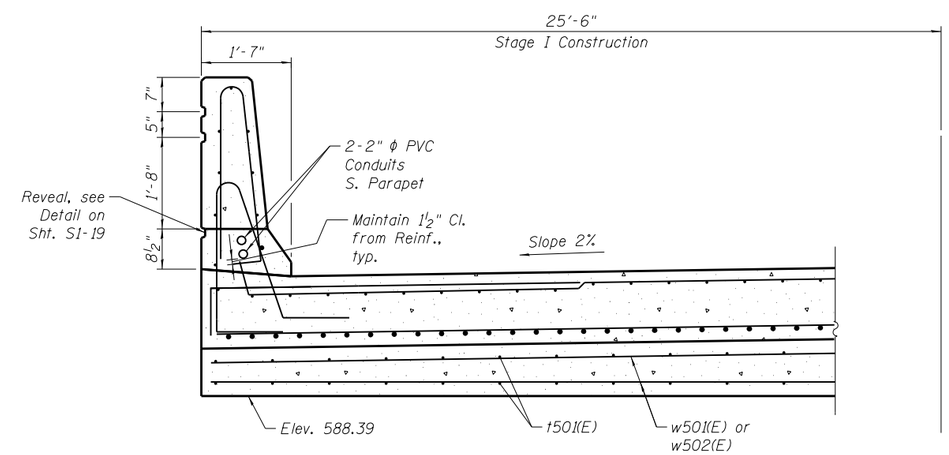

AT APPROACH FOOTING

CROSS SECTION B-B
(Looking East)

0161704-60X75-S22-ApprSlabPlan.dgn

AECOM	USER NAME = floresg	DESIGNED - SD	REVISED
		CHECKED - AV	REVISED
	PLOT SCALE = N.T.S.	DRAWN - SD	REVISED
	PLOT DATE = 6/28/2017	CHECKED - AV	REVISED

STATE OF ILLINOIS
DEPARTMENT OF TRANSPORTATION

WEST APPROACH SLAB PLAN
STRUCTURE NO. 016-1704
SHEET NO. S1-22 OF S1-52 SHEETS

F.A.I. RTE.	SECTION	COUNTY	TOTAL SHEETS	SHEET NO.
90/94/290	2014-001 R&B	COOK	696	243
		CONTRACT NO. 60X75		
	ILLINOIS FED. AID PROJECT			

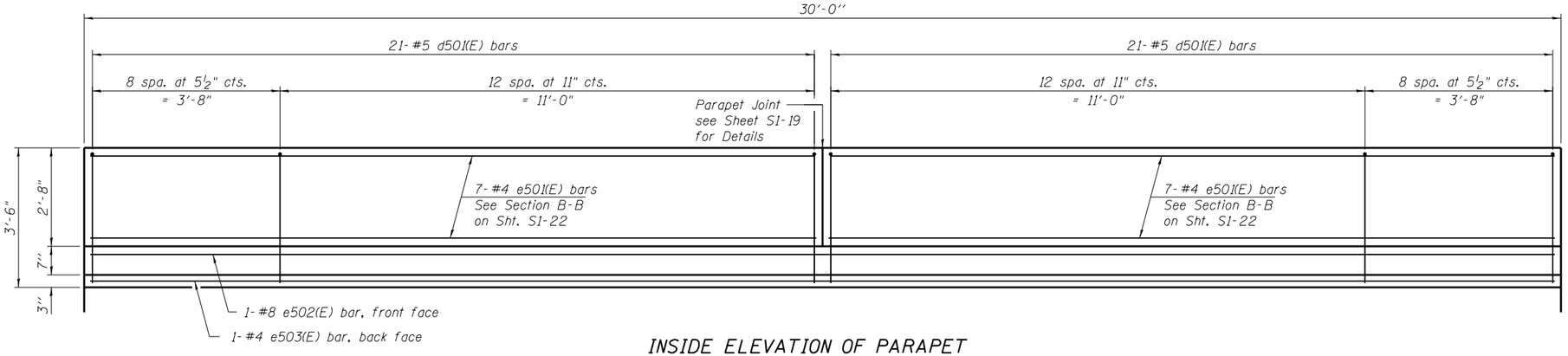

INSIDE ELEVATION OF PARAPET

(N. parapet shown, S. Parapet similar)

NOTES:

1. The joint opening shall be adjusted for temperature per Article 520.04 of the Standard Specifications. However, since this detail is for jointless structures, the length of bridge used to calculate the adjustment shall be equal to half the total bridge length plus the length of the bridge approach pavement.
2. Parapet concrete shall be paid for as Concrete Superstructure.
3. Approach slab shall be paid for as Concrete Superstructure (Approach Slab).
4. Approach footing concrete shall be paid for as Concrete Structures.
5. The approach footing maximum applied service bearing pressure (Qmax) = 2.0 ksf.
6. Cost of excavation for approach footing included with Concrete Structures.
7. For Granular Backfill for Structures and drainage treatment details, see sheet S1-4.

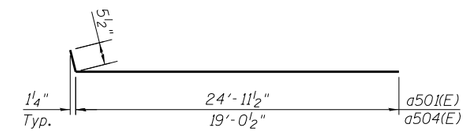

BAR a501(E) & a504(E)

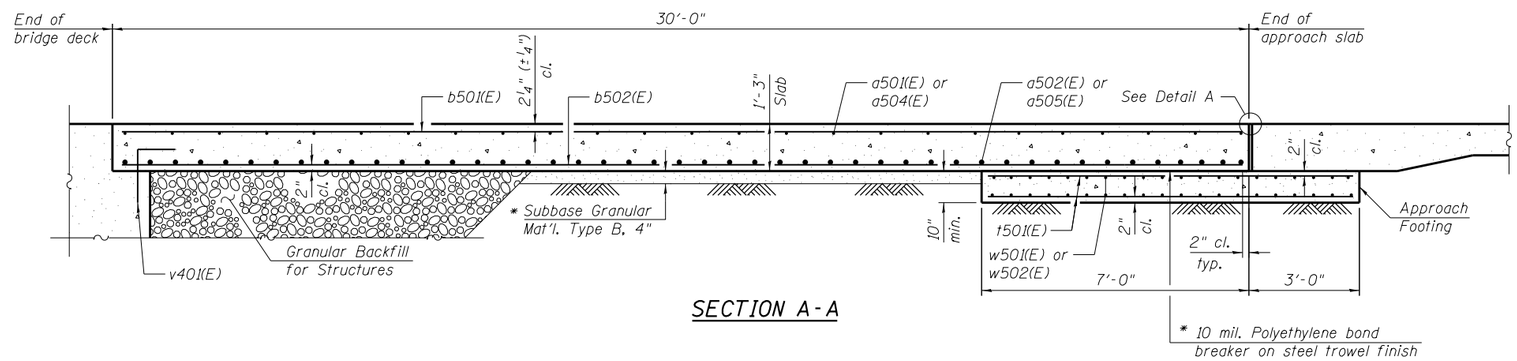

SECTION A-A

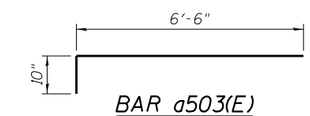

BAR a503(E)

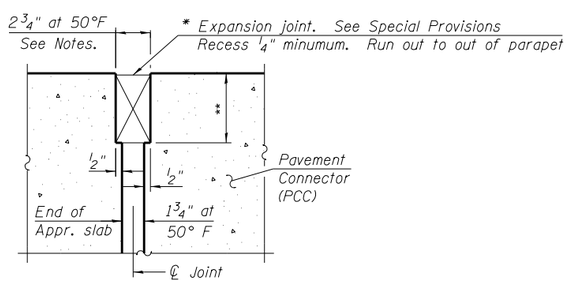

DETAIL A

(Detail A shown, applies to Highway Standard 420401 only. Detail A for pavement connector (HMA) may be found on Highway Standard 420406.)

* Cost included with Concrete Superstructure (Approach Slab).

** Per manufacturer recommendations

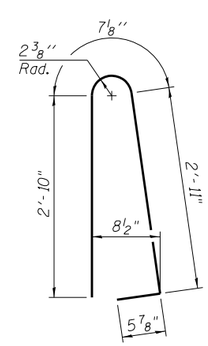

BAR d501(E)

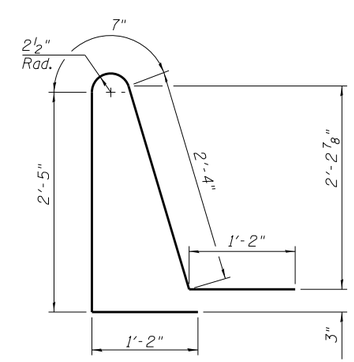

BAR d502(E)

BILL OF MATERIAL

Bar	No.	Size	Length	Shape
a501(E)	46	#5	25'-5"	
a502(E)	60	#8	25'-3"	
a503(E)	92	#5	7'-4"	
a504(E)	46	#5	19'-6"	
a505(E)	60	#8	19'-4"	
b501(E)	69	#5	29'-8"	
b502(E)	109	#9	29'-8"	
d501(E)	84	#5	6'-10"	
d502(E)	84	#5	7'-8"	
e501(E)	28	#4	14'-8"	
e502(E)	2	#8	29'-8"	
e503(E)	2	#4	29'-8"	
t501(E)	92	#4	9'-8"	
w501(E)	40	#5	25'-3"	
w502(E)	40	#5	19'-4"	
Concrete Structures			Cu. Yd.	14.0
Concrete Superstructure			Cu. Yd.	8.4
Protective Coat			Sq. Yd.	193
Concrete Superstructure (Approach Slab)			Cu. Yd.	63.0
Reinforecement Bars, Epoxy Coated			Pound	27330

0161704-60X75-S23-ApprSlabDet.dgn

AECOM

USER NAME = floresg	DESIGNED - SD	REVISED	
	CHECKED - AV	REVISED	
PLOT SCALE = N.T.S.	DRAWN - SD	REVISED	
PLOT DATE = 6/28/2017	CHECKED - AV	REVISED	

STATE OF ILLINOIS
DEPARTMENT OF TRANSPORTATION

APPROACH SLAB DETAILS
STRUCTURE NO. 016-1704

SHEET NO. S1-23 OF S1-52 SHEETS

F.A.I. RTE.	SECTION	COUNTY	TOTAL SHEETS	SHEET NO.
90/94/290	2014-001 R&B	COOK	696	244

CONTRACT NO. 60X75

ILLINOIS FED. AID PROJECT

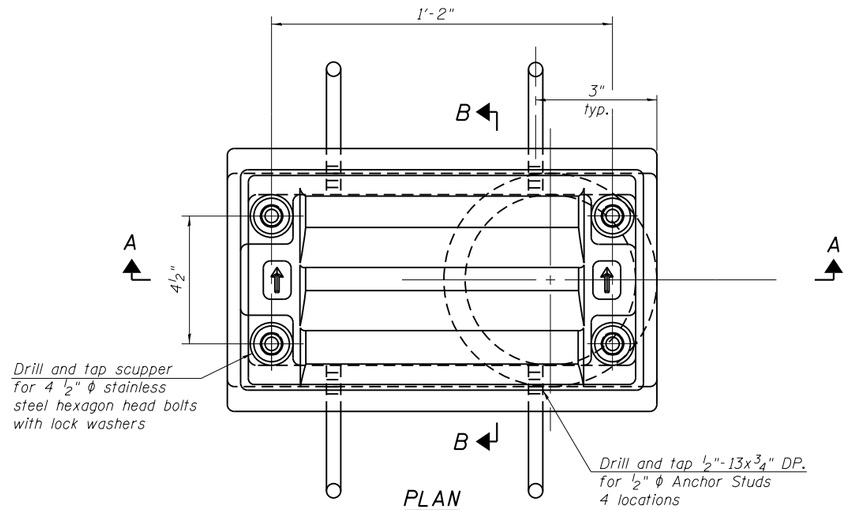

PLAN

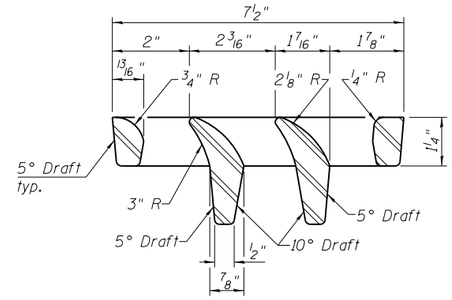

VANE GRATE DETAIL

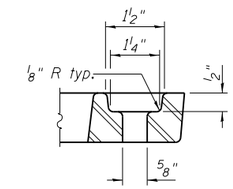

BOLT HOLE DETAIL

Notes:

All cast iron parts shall be gray iron conforming to the requirements of AASHTO M 105, Class 35B.

Bolts, anchor studs, washers and nuts shall conform to the requirements of ASTM A 307 and shall be galvanized according to AASHTO M 232.

Downspouts located on the exterior side of a painted steel fascia beam shall be painted with the finish coat specified for the exterior side of the fascia beam.

As an alternate, bolts, anchor studs, washers and nuts may be stainless steel according to Article 1006.29(d) of the Standard Specifications.

Structural steel weldments of equal sections and of the same configuration may be substituted for the cast iron scupper frame. Fillet or full penetration welds shall be used for the weldments. Details shall be submitted to the Engineer for approval. Structural steel weldments shall not be substituted for the cast iron scupper grate. Structural steel frames and downspouts shall be galvanized according to AASHTO M111.

The Contractor shall take appropriate measures to assure that Protective Coat is not applied to the scupper.

Cost of the Grate, Frame, Downspout, Anchor Studs, Bolts, Washers and Nuts including complete installation of the scupper shall be paid for at the contract unit price each for Drainage Scupper, DS-11.

Alternate fiberglass downspout conforming to ASTM D 2996 with a short-time rupture strength hoop tensile stress of 30,000 psi min. may be used in lieu of the cast iron or steel equivalent.

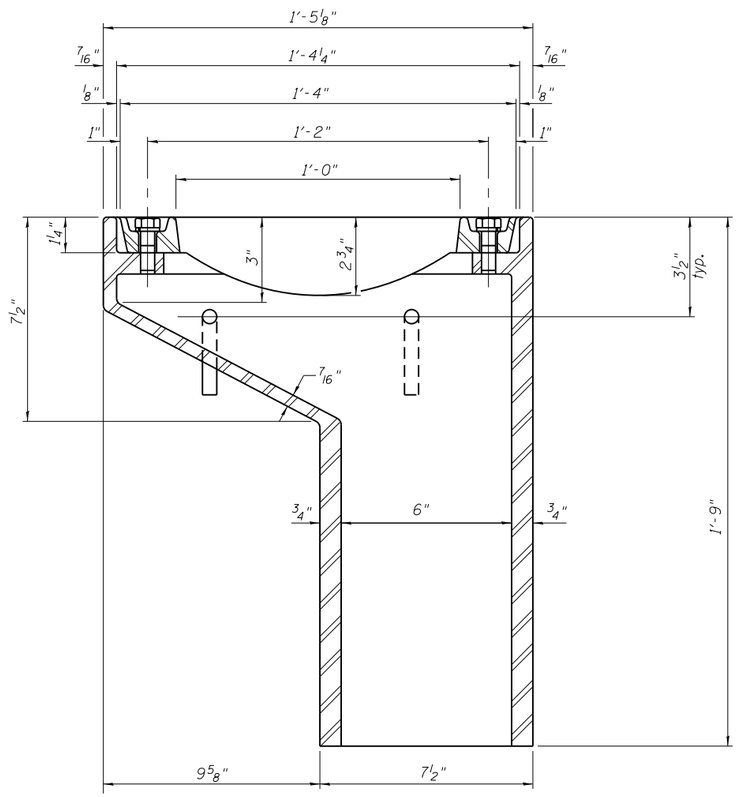

SECTION A-A

See Sheet S1-19 for scupper location relative to parapet.

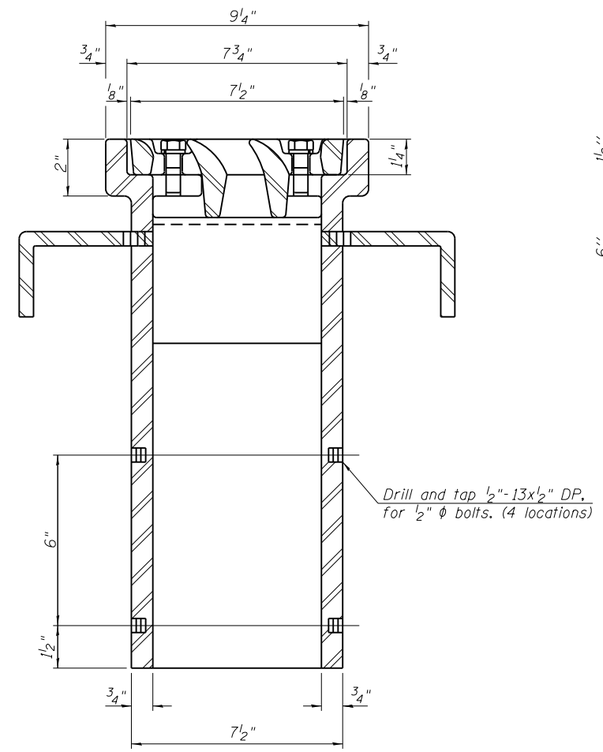

SECTION B-B

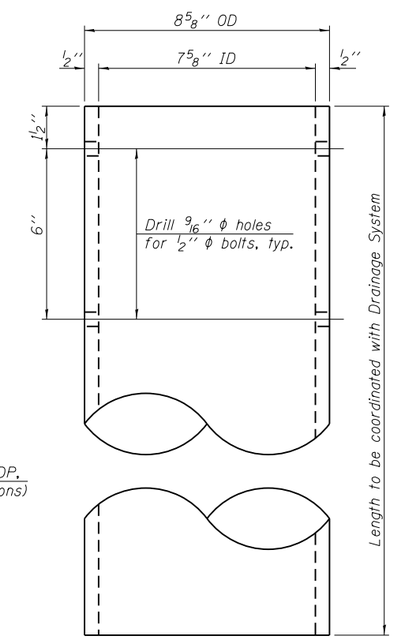

DOWNSPOUT

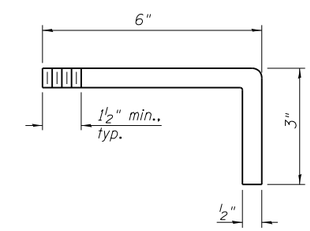

ANCHOR STUD DETAIL

BILL OF MATERIAL

ITEM	UNIT	QUANTITY
Drainage Scuppers, DS-11	Each	12

DS-11 7-1-10

AECOM

USER NAME = floresg	DESIGNED - JXH	REVISED	
	CHECKED - ATB	REVISED	
PLOT SCALE = N.T.S.	DRAWN - JXH	REVISED	
PLOT DATE = 6/28/2017	CHECKED - ATB	REVISED	

STATE OF ILLINOIS
DEPARTMENT OF TRANSPORTATION

DRAINAGE SCUPPER, DS-11
STRUCTURE NO. 016-1704

SHEET NO. S1-24 OF S1-52 SHEETS

F.A.I. RTE.	SECTION	COUNTY	TOTAL SHEETS	SHEET NO.
90/94/290	2014-001 R&B	COOK	696	245

CONTRACT NO. 60X75

ILLINOIS FED. AID PROJECT

0161704-60X75-S24-DrainageScupperDS-11.dgn

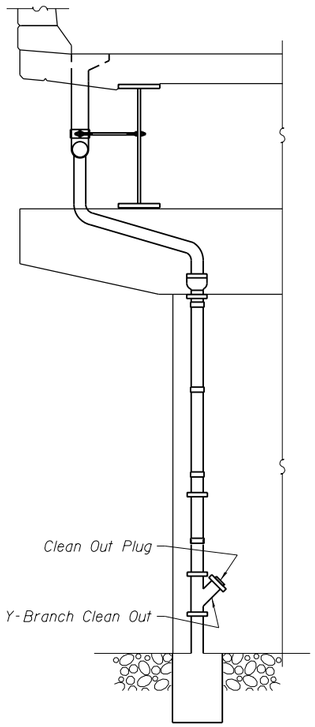

TYPICAL ELEVATION
VIEW PIER 1 & 2
(Looking West)

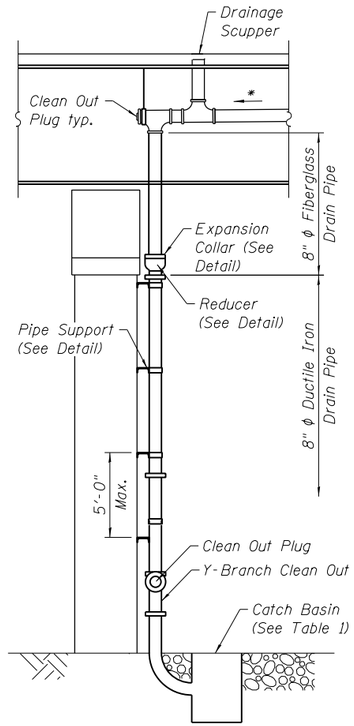

PIERS 1, 2, & 3 END VIEW
(Looking North)

*Minimum slope 2.00 %

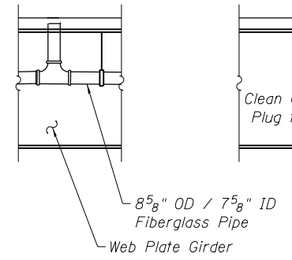

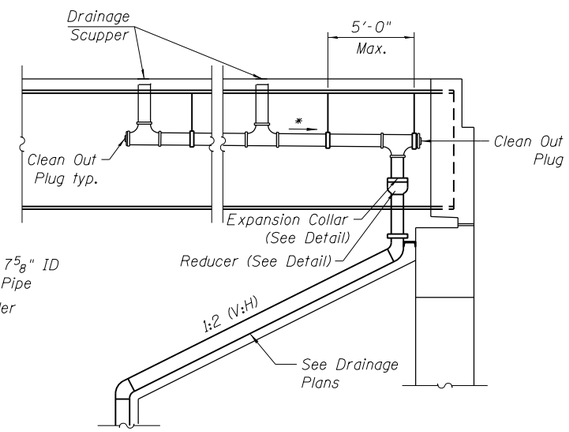

W. ABUTMENT
(Looking South)

TABLE 1

Catch Basin Location	Drainage Structure Number
Pier C1	PS-108
Pier 1	PS-102
Pier 2	PS-104
Pier 3	PS-106

Notes:

1. Drainage System shall be as per special provisions for Drainage System.
2. The color of the drain pipe shall be Gray.
3. S.S. denotes Stainless Steel.

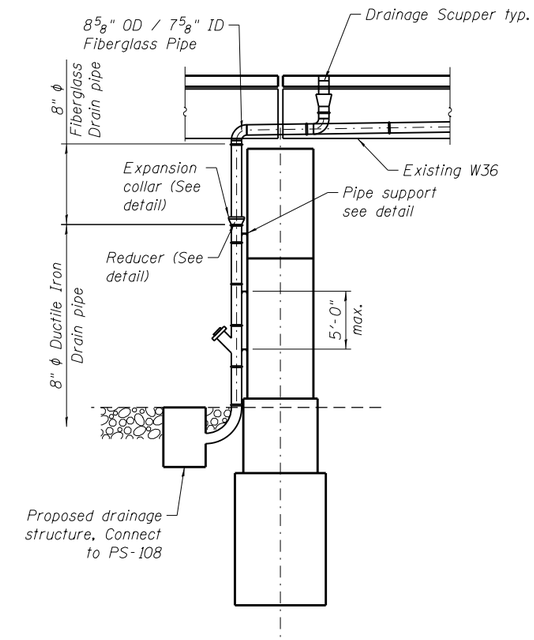

PIER C1
(Looking North)

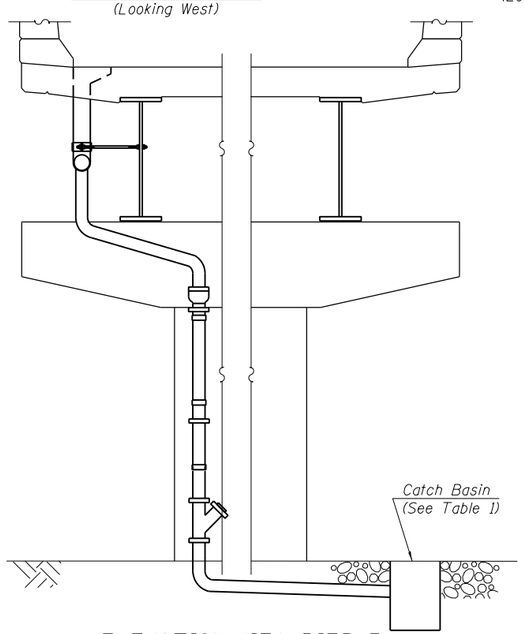

ELEVATION VIEW PIER 3
(Looking West)

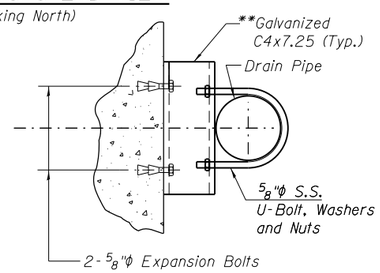

PLAN

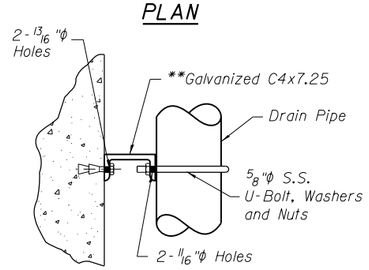

ELEVATION

PIPE SUPPORT DETAIL

** Provide curved C6x8.2 to fit Round Pier Columns where needed

DRAINAGE SYSTEM

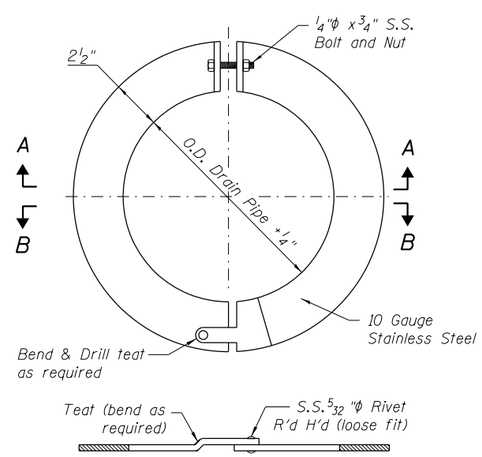

SECTION B-B

DETAIL OF EXPANSION COLLAR

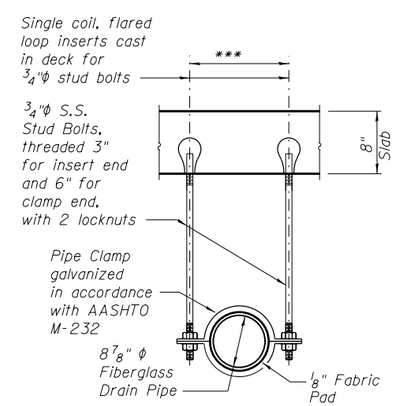

PIPE SUPPORT DETAIL

*** Dimension as required by Pipe Clamp

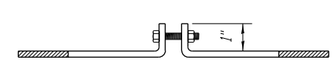

SECTION A-A

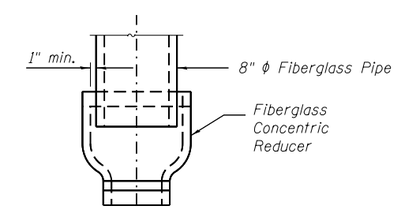

REDUCER DETAIL

BILL OF MATERIAL

Item	Unit	Quantity
Drainage System	L. Sum	0.2

AECOM

USER NAME = floresg	DESIGNED - JSK	REVISED	
	CHECKED - JXH	REVISED	
PLOT SCALE = N.T.S.	DRAWN - JSK	REVISED	
PLOT DATE = 6/28/2017	CHECKED - JXH	REVISED	

STATE OF ILLINOIS
DEPARTMENT OF TRANSPORTATION

DRAINAGE SYSTEM
STRUCTURE NO. 016-1704
SHEET NO. S1-25 OF S1-52 SHEETS

F.A.I. RTE.	SECTION	COUNTY	TOTAL SHEETS	SHEET NO.
90/94/290	2014-001 R&B	COOK	696	246

CONTRACT NO. 60X75
ILLINOIS FED. AID PROJECT

0161704-60X75-S25-DrainSystem.dgn

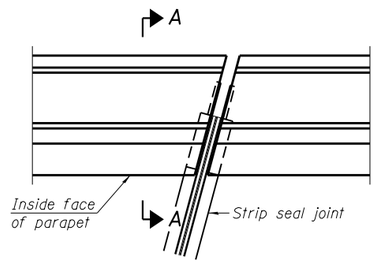

PLAN
(For skews ≤ 30°)

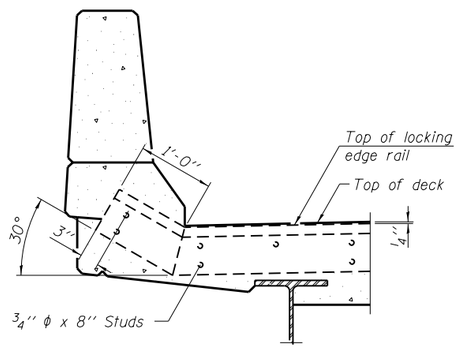

SECTION A-A

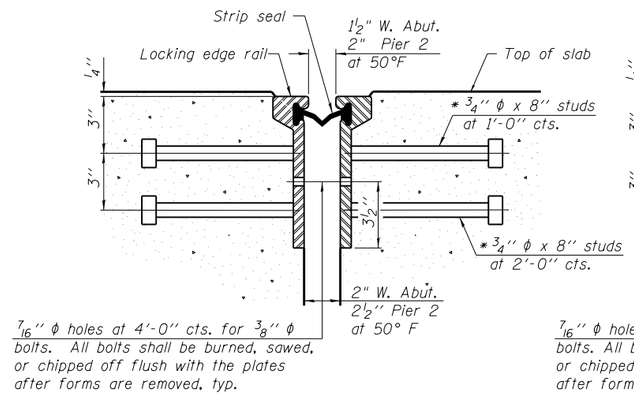

SECTION THRU
ROLLED RAIL JOINT

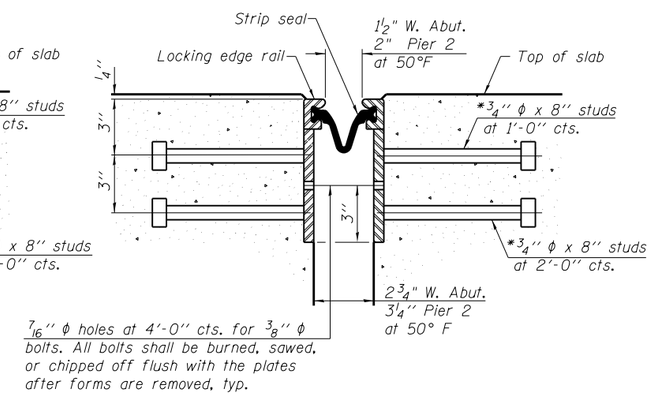

SECTION THRU
WELDED RAIL JOINT

* Granular or solid flux filled headed studs conforming to Article 1006.32 of the Std. Specs., automatically end welded.

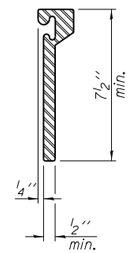

ROLLED
EXTRUDED RAIL

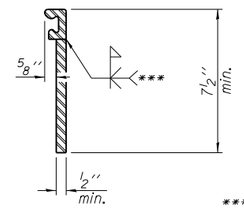

WELDED RAIL

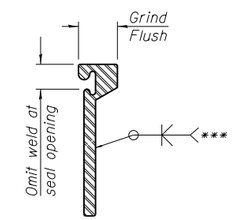

*** Back gouge not required if complete joint penetration is verified by mock-up.

LOCKING EDGE
RAIL SPLICE

The inside of the locking edge rail groove shall be free of weld residue.

Rolled rail shown, welded rail similar.

LOCKING EDGE RAILS

Notes:

The strip seal shall be made continuous and shall have a minimum thickness of 1/4". The configuration of the strip seal shall match the configuration of the Locking Edge Rails. Open or "webbed" strip seal gland configurations are not permitted. The gland shall be sized for a maximum rated movement of 4 inches.

The Locking Edge Rails depicted are conceptual only, except for the minimum dimensions shown. The actual configuration of the Locking Edge Rails and matching strip seal may vary from manufacturer to manufacturer. Flanged edge rails will not be allowed. Locking Edge Rails may be spliced at slope discontinuities.

The manufacturer's recommended installation methods shall be followed.

The joint opening and deck dimensions detailed on the superstructure are based on a rolled rail expansion joint. If the Contractor elects to use the welded rail expansion joint, the opening and deck dimensions shall be modified according to the dimensions detailed on this sheet. Required modifications shall be made at no additional cost to the State.

All steel components shall be galvanized after fabrication according to Article 520.03 of the Standard Specifications.

Maximum space between rail segments shall be 3/16", sealed with a suitable sealant. Joints in rails within 10 ft. of curbs shall be welded.

Parapet plates and anchorage studs for skews > 30° included in the cost of Preformed Joint Strip Seal.

BILL OF MATERIAL

Item	Unit	Total
Preformed Joint Strip Seal	Foot	88

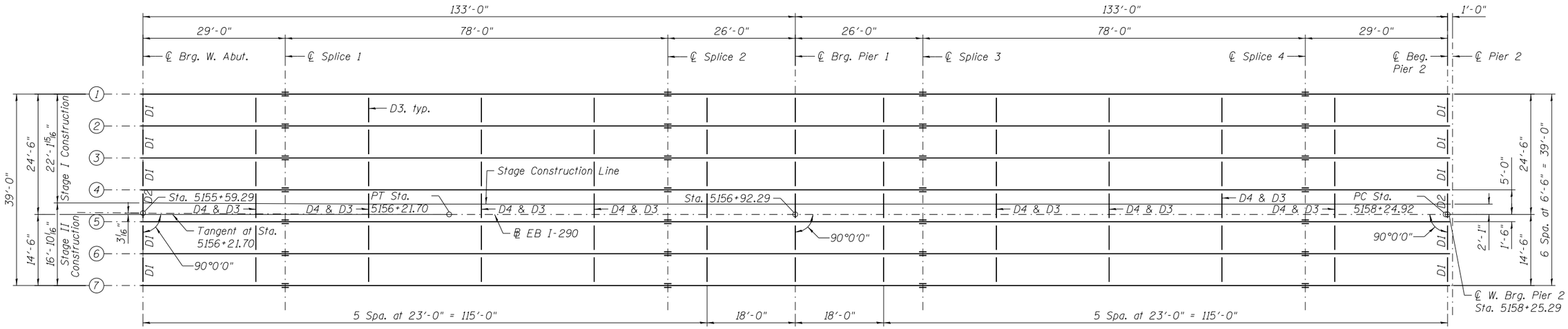

FRAMING - UNIT 1

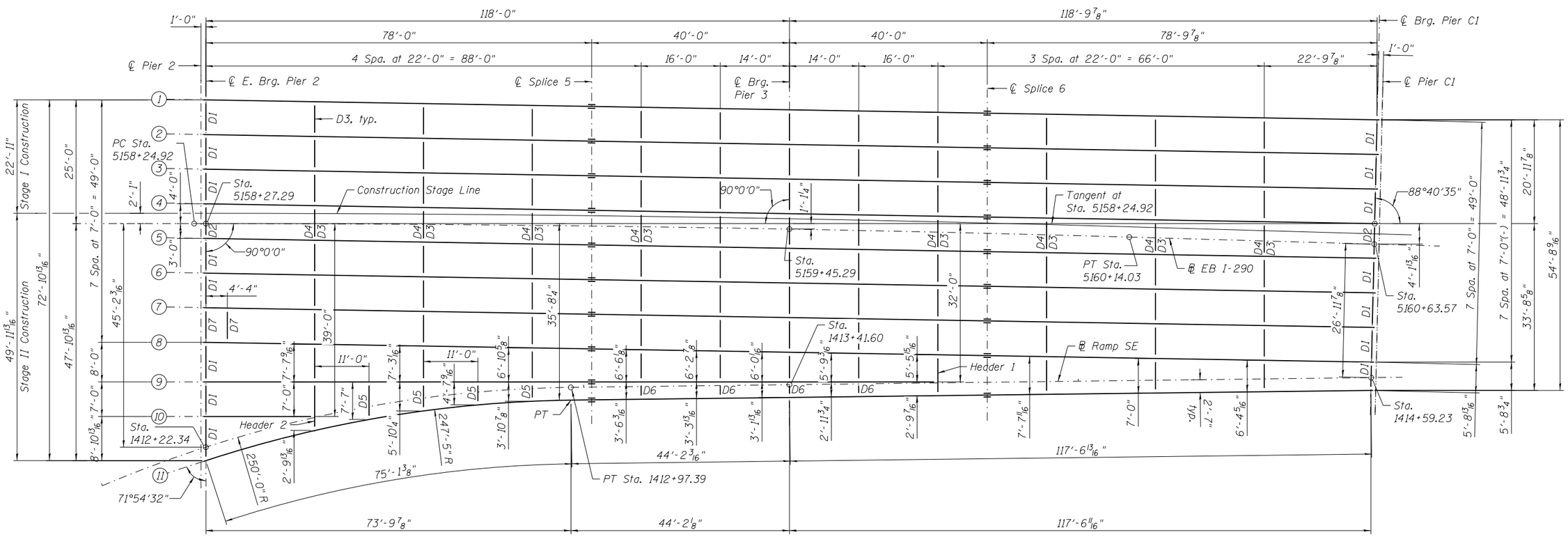

FRAMING - UNIT 2

USER NAME = floresg	DESIGNED - JXH	REVISED	
	CHECKED - DD	REVISED	
PLOT SCALE = N.T.S.	DRAWN - JXH	REVISED	
PLOT DATE = 6/28/2017	CHECKED - DD	REVISED	

AECOM

STATE OF ILLINOIS
DEPARTMENT OF TRANSPORTATION

FRAMING PLAN
STRUCTURE NO. 016–1704
SHEET NO. S1-27 OF S1-52 SHEETS

F.A.I. RTE.	SECTION	COUNTY	TOTAL SHEETS	SHEET NO.
90/94/290	2014-001 R&B	COOK	696	248
		CONTRACT NO. 60X75		
	ILLINOIS FED. AID PROJECT			

0161704-60X75-S27-FramePlan.dgn

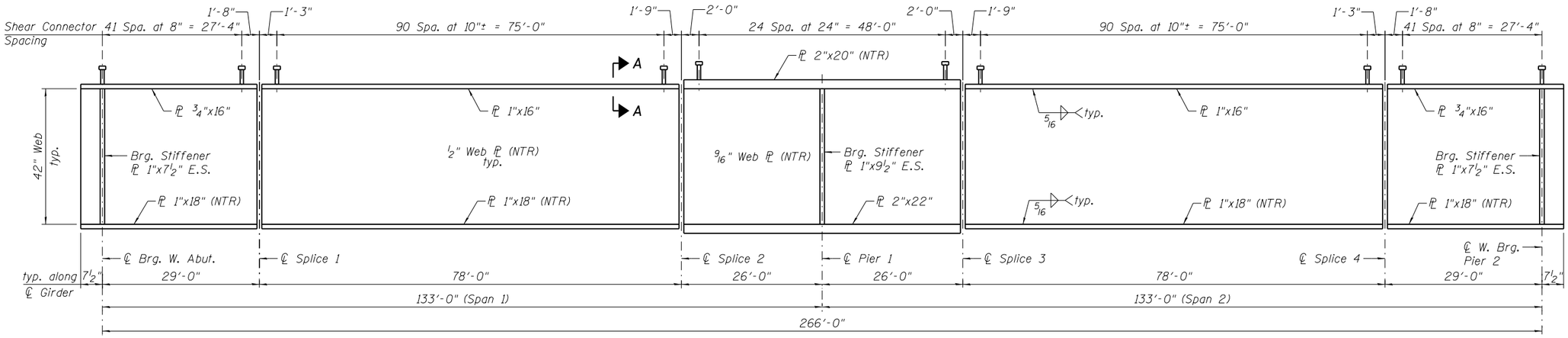

GIRDER ELEVATION - UNIT 1

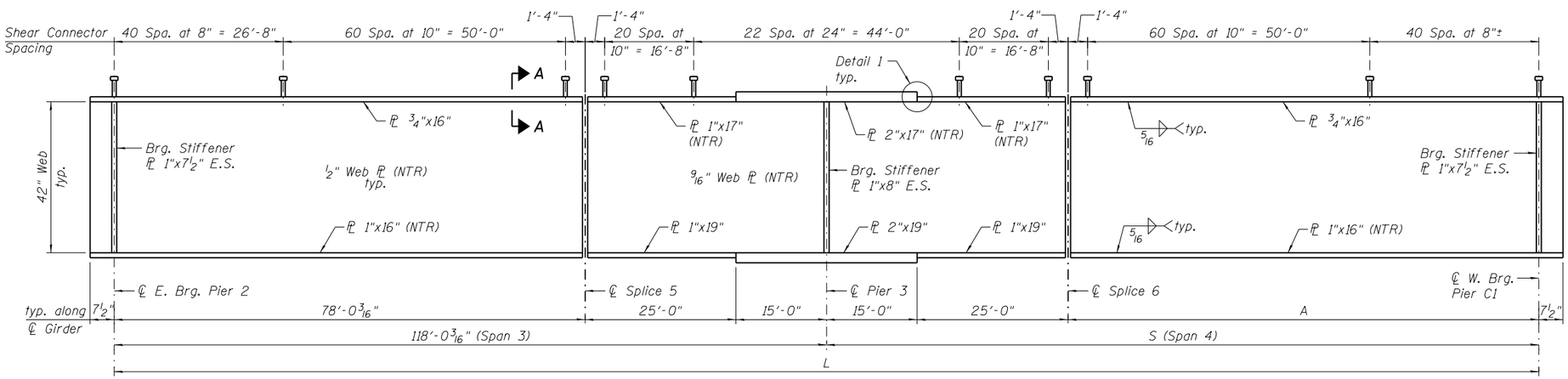

GIRDERS 1 THRU 8 ELEVATION - UNIT 2

GIRDER DIMENSIONS - UNIT 2

(All dimensions in Feet)

Girder	A	S	L*
1	78.839	118.840	236.856
2	78.678	118.678	236.695
3	78.516	118.516	236.533
4	78.354	118.354	236.371
5	78.193	118.193	236.210
6	78.031	118.031	236.048
7	77.869	117.869	235.886
8	77.707	117.708	235.725

* Girder Length "L" excludes girder end beyond bearing.

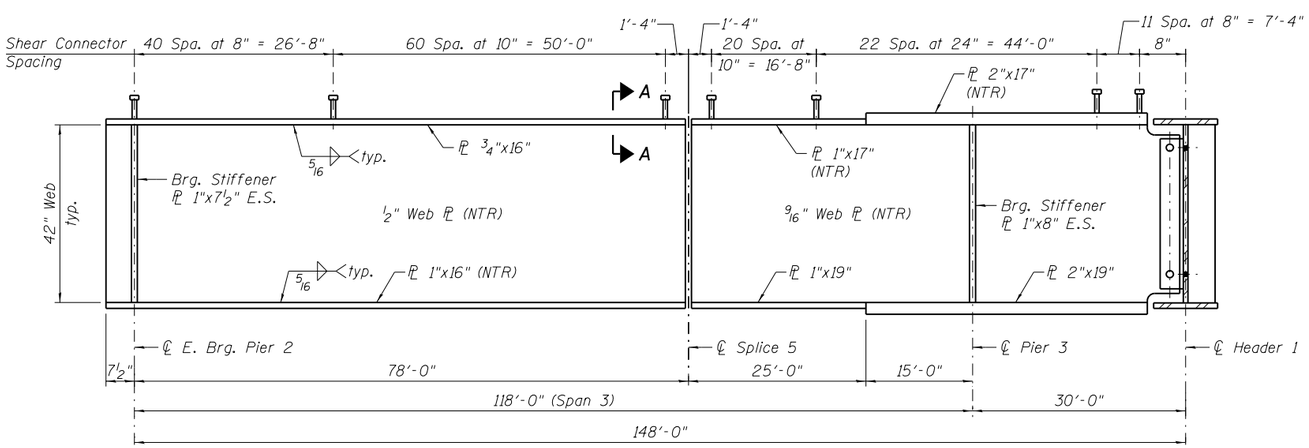

GIRDER 9 ELEVATION - UNIT 2

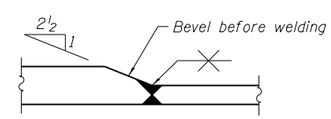

DETAIL 1

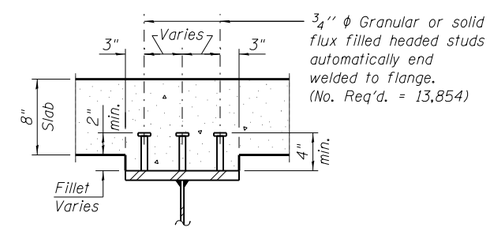

SECTION A-A

NOTES:

1. See Sheet S1-27 for girder framing plan.
2. All structural steel shall be AASHTO M270 Grade 50.
3. Load carrying components designated "NTR" shall conform to the Impact Testing Requirement, Zone 2.

0161704-60X75-S28-GirderElev-1.dgn

AECOM

USER NAME = floresg	DESIGNED - JXH	REVISED	
	CHECKED - DD	REVISED	
PLOT SCALE = N.T.S.	DRAWN - JXH	REVISED	
PLOT DATE = 6/28/2017	CHECKED - DD	REVISED	

STATE OF ILLINOIS
DEPARTMENT OF TRANSPORTATION

GIRDER ELEVATIONS – 1
STRUCTURE NO. 016–1704

SHEET NO. S1-28 OF S1-52 SHEETS

F.A.I. RTE.	SECTION	COUNTY	TOTAL SHEETS	SHEET NO.
90/94/290	2014-001 R&B	COOK	696	249
		CONTRACT NO. 60X75		
		ILLINOIS FED. AID PROJECT		

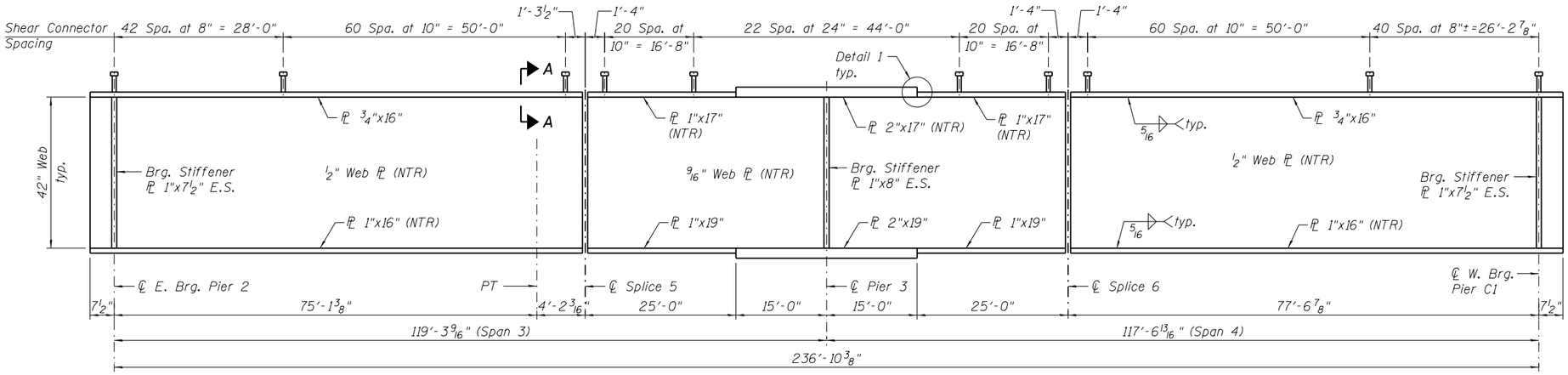

GIRDER 11 ELEVATION - UNIT 2

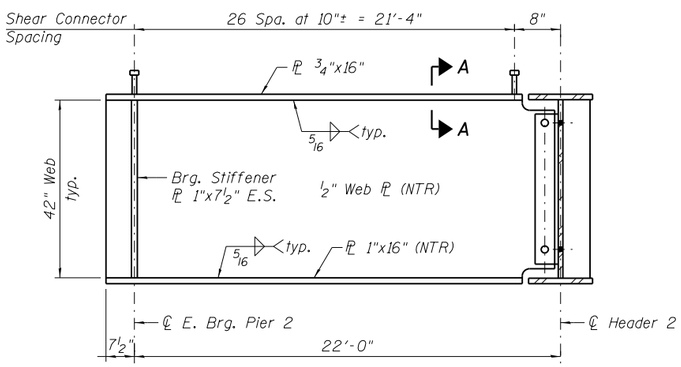

GIRDER 10 ELEVATION - UNIT 2

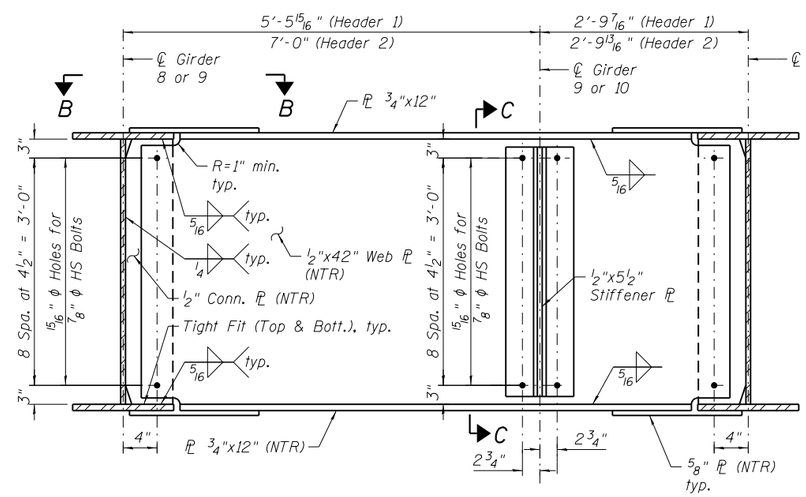

HEADER GIRDER ELEVATION

(Looking upstation)

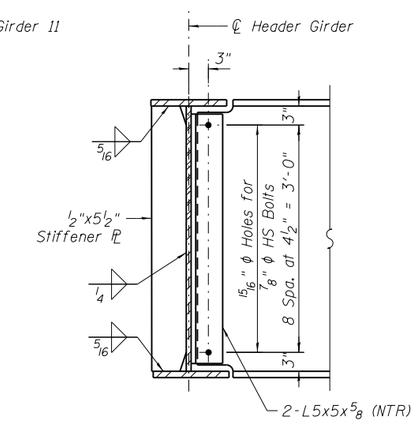

SECTION C-C

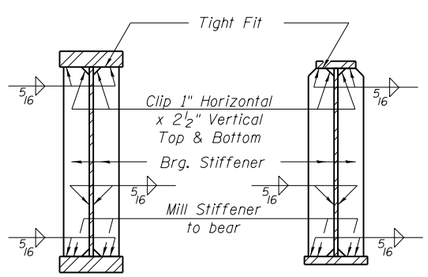

AT PIER AT ABUTMENT

BEARING STIFFENERS DETAIL

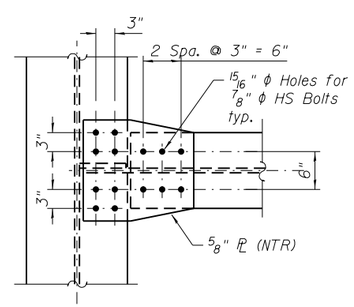

SECTION B-B

NOTES:

1. See Sheet S1-27 for girder framing plan.
2. See Sheet S1-28 for Detail 1 and Section A-A.
3. All structural steel shall be AASHTO M270 Grade 50.
4. Load carrying components designated "NTR" shall conform to the Impact Testing Requirement, Zone 2.

0161704-60X75-S29-GirderElev-2.dgn

AECOM

USER NAME = floresg	DESIGNED - JXH	REVISED	
	CHECKED - DD	REVISED	
PLOT SCALE = N.T.S.	DRAWN - JXH	REVISED	
PLOT DATE = 6/28/2017	CHECKED - DD	REVISED	

STATE OF ILLINOIS
DEPARTMENT OF TRANSPORTATION

GIRDER ELEVATIONS – 2
STRUCTURE NO. 016–1704

SHEET NO. S1-29 OF S1-52 SHEETS

F.A.I. RTE.	SECTION	COUNTY	TOTAL SHEETS	SHEET NO.
90/94/290	2014-001 R&B	COOK	696	250
		CONTRACT NO. 60X75		
	ILLINOIS	FED. AID PROJECT		

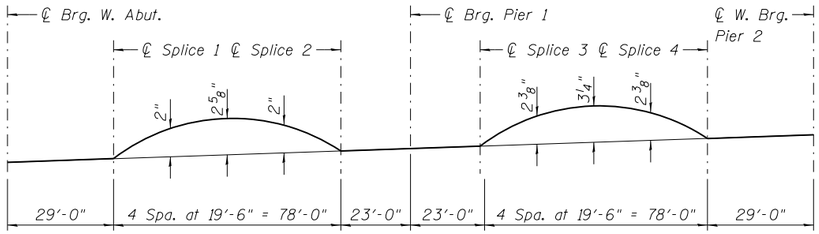

CAMBER DIAGRAM - ALL GIRDERS UNIT 1

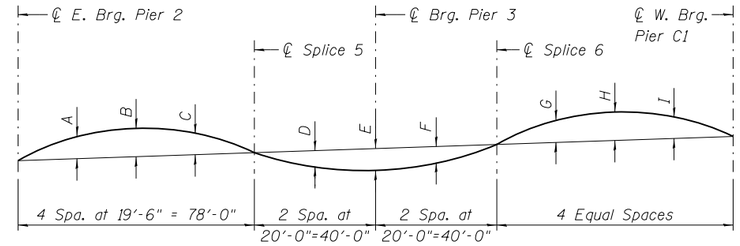

CAMBER DIAGRAM - GIRDERS 1 THRU 8 UNIT 2

CAMBER ORDINATES

Girder	A	B	C	D	E	F	G	H	I
1-3	2 1/4"	3 1/8"	2 1/4"	1 1/8"	1 1/2"	1 1/8"	2 3/8"	3 1/8"	2 1/8"
4-7	1 7/8"	2 3/4"	2"	1"	1 3/8"	1"	2 1/8"	2 7/8"	2"
8	1"	1 3/8"	1"	5/8"	7/8"	5/8"	1 7/8"	2 5/8"	1 3/4"

TOP OF WEB ELEVATIONS - UNIT 1

(For fabrication only)

Girder No.	℄ Brg. W. Abut.	℄ Splice 1	℄ Splice 2	℄ Brg. Pier 1	℄ Splice 3	℄ Splice 4	℄ W. Brg. Pier 2
1	591.03	592.39	595.51	596.65	597.79	601.39	602.34
2	591.16	592.52	595.57	596.68	597.80	601.32	602.24
3	591.29	592.65	595.63	596.71	597.80	601.24	602.13
4	591.42	592.78	595.68	596.75	597.81	601.17	602.03
5	591.56	592.91	595.74	596.78	597.81	601.09	601.92
6	591.69	593.04	595.80	596.81	597.82	601.02	601.82
7	591.82	593.17	595.86	596.84	597.82	600.94	601.71

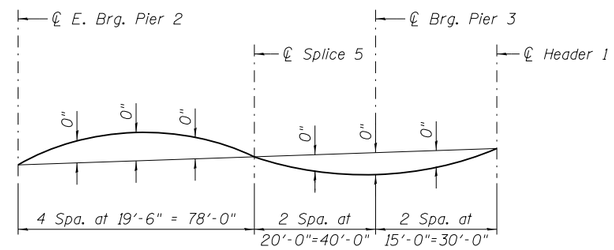

CAMBER DIAGRAM - GIRDER 9 UNIT 2

TOP OF WEB ELEVATIONS - UNIT 2

(For fabrication only)

Girder No.	℄ E. Brg. Pier 2	℄ Splice 5	℄ Brg. Pier 3	℄ Splice 6	℄ W. Brg. Pier C1
1	602.43	605.09	606.05	607.28	608.66
2	602.31	604.95	605.91	607.14	608.61
3	602.20	604.81	605.77	607.00	608.57
4	602.08	604.67	605.64	606.86	608.52
5	601.97	604.53	605.50	606.72	608.44
6	601.85	604.41	605.36	606.57	608.30
7	601.74	604.25	605.21	606.42	608.16
8	601.62	603.97	605.04	606.26	608.02
9	601.35	603.69	604.92	605.85*	
10	600.96	601.47*			
11	600.48	603.54	604.81	606.08	607.91

* Elevations at centerlines of headers.

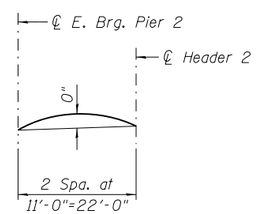

CAMBER DIAGRAM - GIRDER 10 UNIT 2

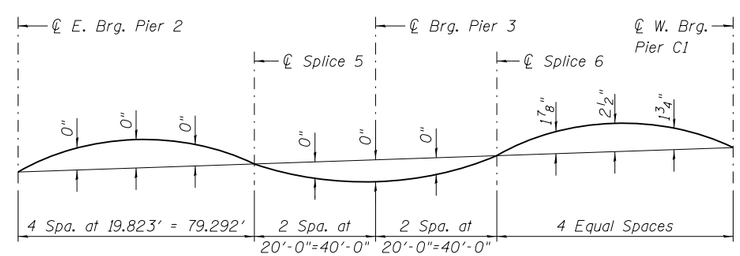

CAMBER DIAGRAM - GIRDER 11 UNIT 2

0161704-60X75-S30-SteelDetails-1.dgn

AECOM	USER NAME = floresg	DESIGNED - JXH	REVISED	STATE OF ILLINOIS DEPARTMENT OF TRANSPORTATION	STEEL DETAILS – 1 STRUCTURE NO. 016–1704	F.A.I. RTE.	SECTION	COUNTY	TOTAL SHEETS / SHEET NO.
		CHECKED - DD	REVISED			90/94/290	2014-001 R&B	COOK	696 / 251
	PLOT SCALE = N.T.S.	DRAWN - JXH	REVISED					CONTRACT NO. 60X75	
	PLOT DATE = 6/28/2017	CHECKED - DD	REVISED		SHEET NO. S1-30 OF S1-52 SHEETS		ILLINOIS	FED. AID PROJECT	

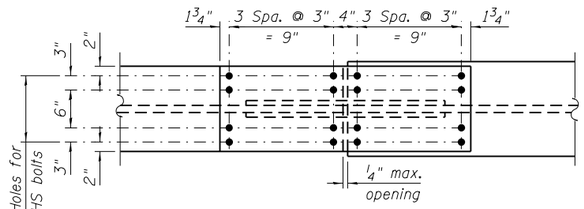

TOP FLANGE SPLICE PLATE

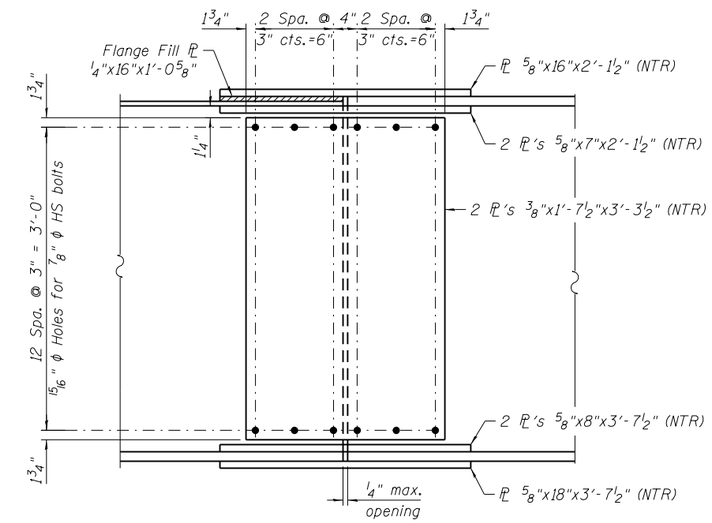

WEB SPLICE PLATE

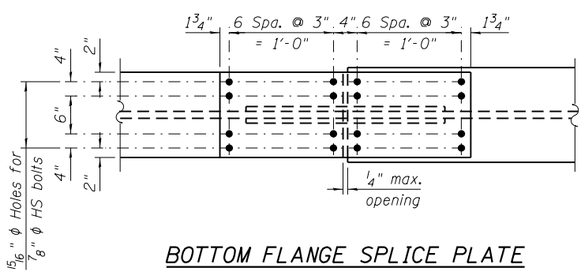

BOTTOM FLANGE SPLICE PLATE

SPLICES 1 & 4

(14 Required)

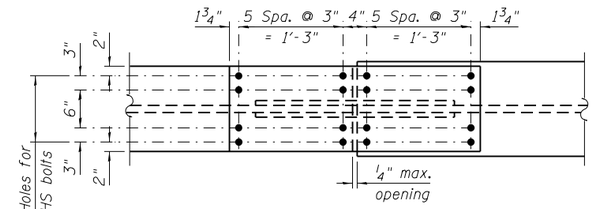

TOP FLANGE SPLICE PLATE

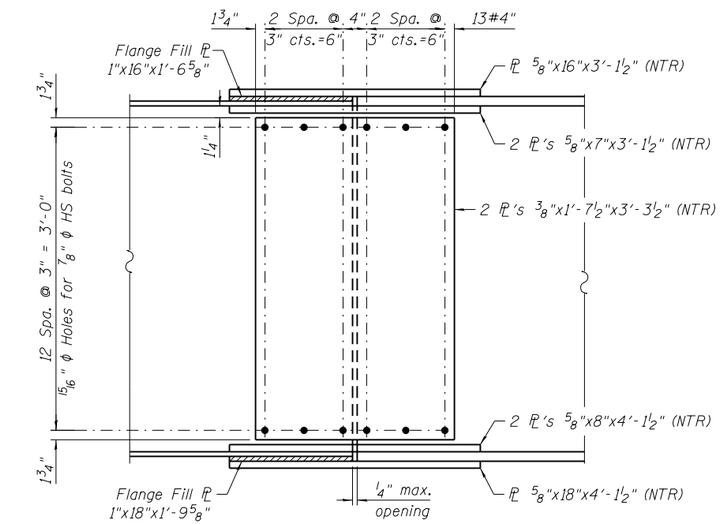

WEB SPLICE PLATE

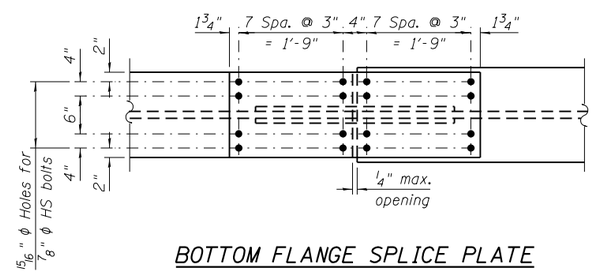

BOTTOM FLANGE SPLICE PLATE

SPLICES 2 & 3

(14 Required)

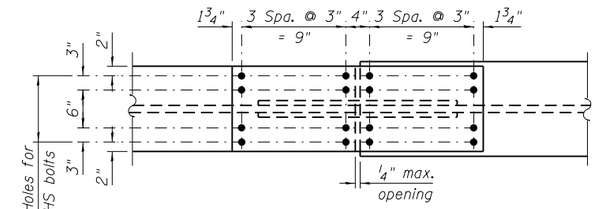

TOP FLANGE SPLICE PLATE

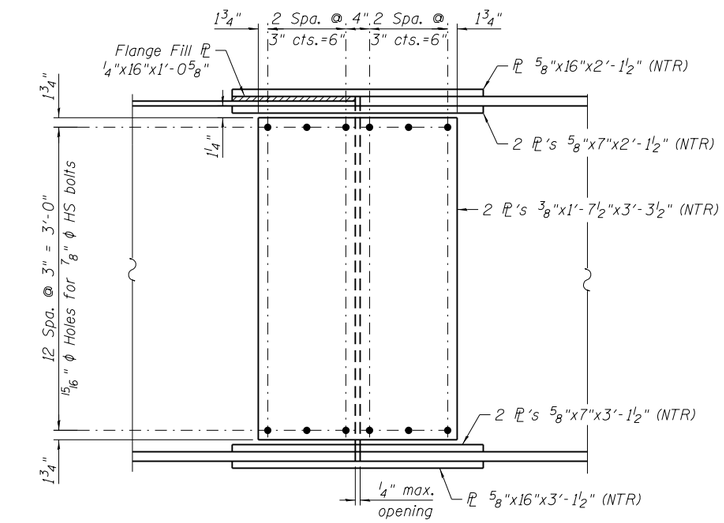

WEB SPLICE PLATE

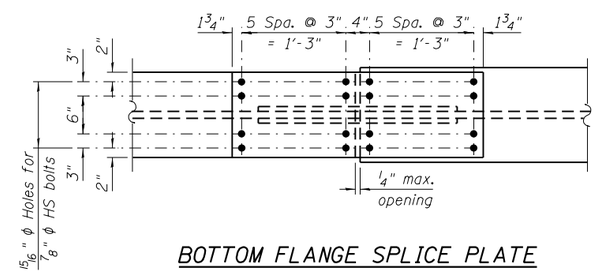

BOTTOM FLANGE SPLICE PLATE

SPLICES 5 & 6

(19 Required)

NOTES:

1. See Sheet S1-27 for girder framing plan.
2. All structural steel shall be AASHTO M270 Grade 50.
3. Load carrying components designated "NTR" shall conform to the Impact Testing Requirement, Zone 2.

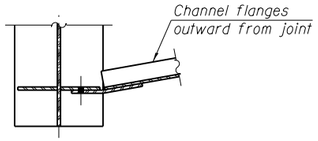

SECTION B-B

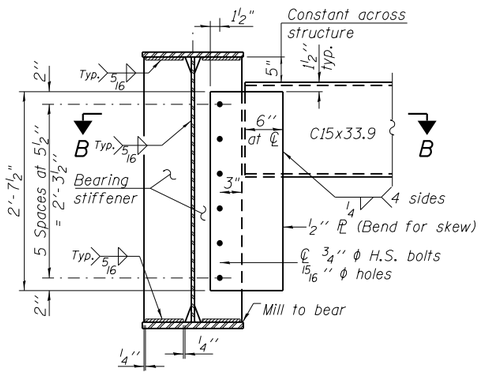

END DIAPHRAGM D1

Note: Two hardened washers required for each set of oversized holes.

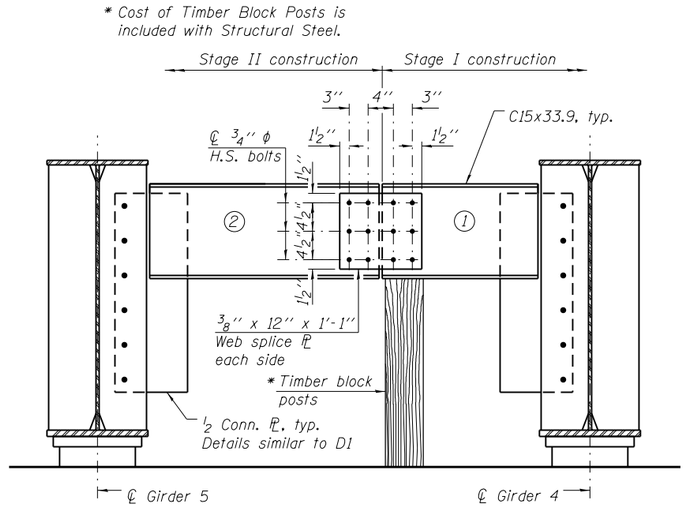

Note: All weld and bolted connection details are similar to diaphragm D1.

END DIAPHRAGM D2
STAGE CONSTRUCTION SEQUENCE

1. Order diaphragm in two sections.
2. Attach section ① of diaphragm to Girder 4.
3. Place timber block posts between section ① of diaphragm and abutment bearing section.
4. Attach section ② of diaphragm to both Girder 5 and section ① of diaphragm during stage II construction with splice plates.
5. Remove timber block posts.

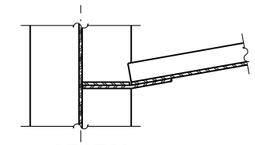

SECTION A-A

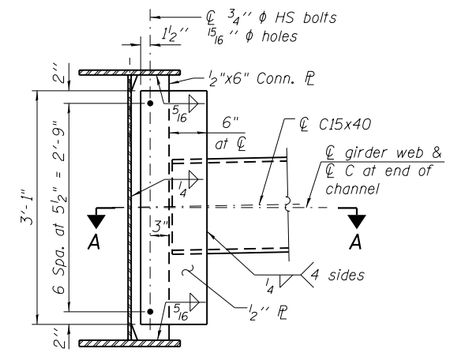

INTERIOR DIAPHRAGM D3

Note:
Two hardened washers required for each set of oversized holes.
Alternate channels C15x50 are permitted to facilitate material acquisition. Calculated weight of structural steel is based on C15x40 sections. The alternate, if utilized, shall be provided at no extra cost to the department.

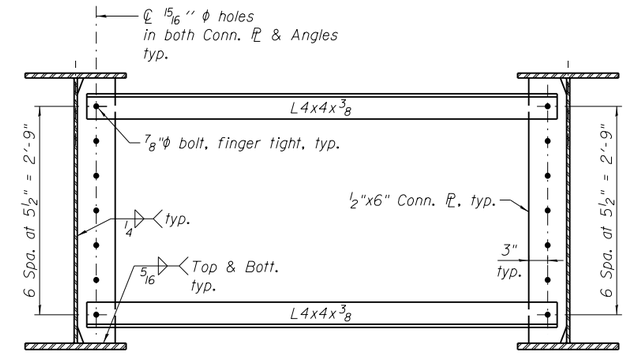

TEMPORARY DIAPHRAGM D4

Diaphragm D4 Stage Construction Sequence Notes:

1. Install Diaphragm D4 prior to Stage II deck pour.
2. Pour Stage II concrete deck.
3. Replace Diaphragm D4 with Diaphragm D3 one by one after Stage II concrete deck is in place.

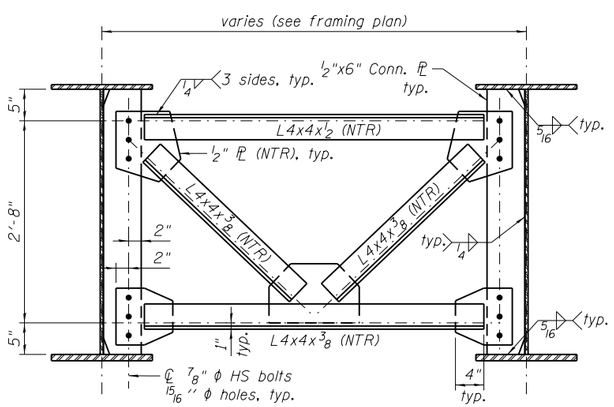

INTERIOR DIAPHRAGM D5

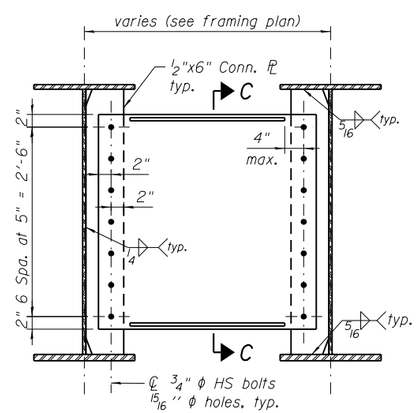

INTERIOR DIAPHRAGM D6

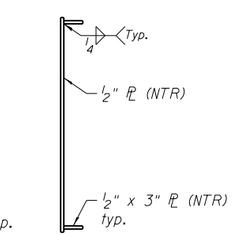

SECTION C-C

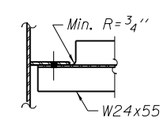

SECTION E-E

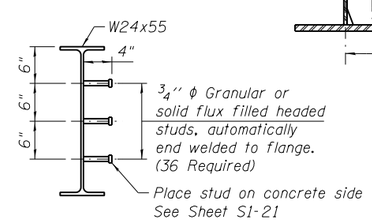

SECTION D-D

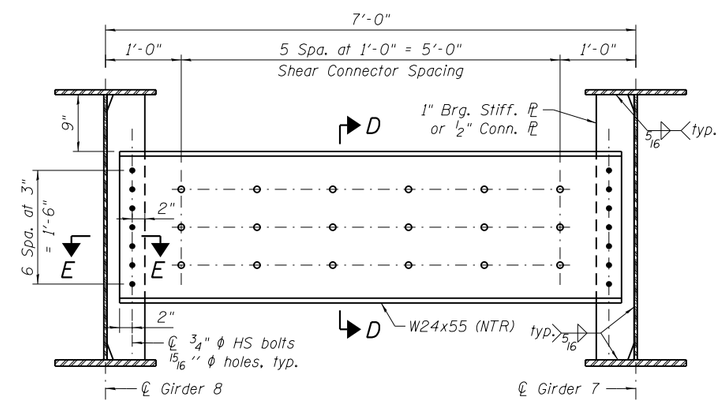

DIAPHRAGM D7

NOTES:

1. See Sheet S1-27 for girder framing plan.
2. All structural steel shall be AASHTO M270 Grade 50.
3. Load carrying components designated "NTR" shall conform to the Impact Testing Requirement, Zone 2.
4. All cross frames or diaphragms shall be installed as steel is erected and secured with erection pins and bolts except as otherwise noted. Individual cross frames or diaphragms at supports may be temporarily disconnected to install bearing anchor rods.

INTERIOR GIRDER MOMENT TABLE - UNIT 1			
		0.4 Sp. 1 or 0.6 Sp. 2	Pier 1
I_s	(in^4)	18,773	44,085
$I_c(n)$	(in^4)	42,883	-
$I_c(3n)$	(in^4)	32,070	-
$I_c(cr)$	(in^4)	-	48,814
S_s	(in^3)	885	1,988
$S_c(n)$	(in^3)	1,150	-
$S_c(3n)$	(in^3)	1,064	-
$S_c(cr)$	(in^3)	-	2,057
DC1	(k/')	0.90	1.08
M_{DC1}	('k)	932	2,453
DC2	(k/')	0.20	0.20
M_{DC2}	('k)	216	522
DW	(k/')	0.33	0.33
M_{DW}	('k)	350	849
M_{LL+IM}	('k)	1,575	2,108
M_u (Strength I)	('k)	4,716	8,681
$\phi_f M_n$	('k)	5,682	9,600
f_s DC1	(ksi)	12.6	14.8
f_s DC2	(ksi)	2.4	3.0
f_s DW	(ksi)	3.9	5.0
f_s (LL+IM)	(ksi)	16.4	12.3
f_s (Service II)	(ksi)	40.4	38.8
$0.95R_hF_{yf}$	(ksi)	47.5	47.5
f_s (Total)(Strength I)	(ksi)	-	-
$\phi_f F_n$	(ksi)	-	-
V_f	(k)	57.7	57.5

INTERIOR GIRDERS 2 TO 7 MOMENT TABLE - UNIT 2				
		0.4 Sp. 3	Pier 3	0.6 Sp. 4
I_s	(in^4)	15,811	38,264	15,811
$I_c(n)$	(in^4)	40,231	-	40,231
$I_c(3n)$	(in^4)	29,965	-	29,965
$I_c(cr)$	(in^4)	-	43,335	-
S_s	(in^3)	782	1,733	782
$S_c(n)$	(in^3)	1,060	-	1,060
$S_c(3n)$	(in^3)	980	-	980
$S_c(cr)$	(in^3)	-	1,809	-
DC1	(k/')	0.92	1.08	0.92
M_{DC1}	('k)	773	1,970	793
DC2	(k/')	0.20	0.20	0.20
M_{DC2}	('k)	174	401	178
DW	(k/')	0.35	0.35	0.35
M_{DW}	('k)	304	703	311
M_{LL+IM}	('k)	1,444	1,864	1,446
M_u (Strength I)	('k)	4,167	7,280	4,211
$\phi_f M_n$	('k)	5,223	8,214	5,210
f_s DC1	(ksi)	11.9	13.6	12.2
f_s DC2	(ksi)	2.1	2.7	2.2
f_s DW	(ksi)	3.7	4.7	3.8
f_s (LL+IM)	(ksi)	16.3	12.4	16.4
f_s (Service II)	(ksi)	39.0	37.0	39.4
$0.95R_hF_{yf}$	(ksi)	47.5	47.5	47.5
f_s (Total)(Strength I)	(ksi)	-	-	-
$\phi_f F_n$	(ksi)	-	-	-
V_f	(k)	56.3	58.4	55.9

INTERIOR GIRDER 8 MOMENT TABLE - UNIT 2				
		0.4 Sp. 3	Pier 3	0.6 Sp. 4
I_s	(in^4)	15,811	38,264	15,811
$I_c(n)$	(in^4)	40,359	-	40,294
$I_c(3n)$	(in^4)	30,092	-	30,027
$I_c(cr)$	(in^4)	-	42,962	-
S_s	(in^3)	782	1,733	782
$S_c(n)$	(in^3)	1,061	-	1,060
$S_c(3n)$	(in^3)	981	-	980
$S_c(cr)$	(in^3)	-	1,804	-
DC1	(k/')	0.90	1.00	0.90
M_{DC1}	('k)	847	1,789	644
DC2	(k/')	0.00	0.00	0.00
M_{DC2}	('k)	72	90	29
DW	(k/')	0.35	0.32	0.35
M_{DW}	('k)	331	619	249
M_{LL+IM}	('k)	1,658	1,929	1,584
M_u (Strength I)	('k)	4,547	6,653	3,987
$\phi_f M_n$	('k)	5,193	8,224	5,327
f_s DC1	(ksi)	13.0	12.4	9.9
f_s DC2	(ksi)	0.9	0.6	0.4
f_s DW	(ksi)	4.0	4.1	3.0
f_s (LL+IM)	(ksi)	18.8	12.8	17.9
f_s (Service II)	(ksi)	42.3	33.8	36.6
$0.95R_hF_{yf}$	(ksi)	47.5	47.5	47.5
f_s (Total)(Strength I)	(ksi)	-	-	-
$\phi_f F_n$	(ksi)	-	-	-
V_f	(k)	73.8	76.8	69.3

I_s, S_s: Non-composite moment of inertia and section modulus of the steel section used for computing f_s (Total-Strength I, and Service II) due to non-composite dead loads ($in.^4$ and $in.^3$).

$I_c(n)$, $S_c(n)$: Composite moment of inertia and section modulus of the steel and deck based upon the modular ratio, "n", used for computing f_s (Total-Strength I, and Service II) in uncracked sections due to short-term composite live loads ($in.^4$ and $in.^3$).

$I_c(3n)$, $S_c(3n)$: Composite moment of inertia and section modulus of the steel and deck based upon 3 times the modular ratio, "3n", used for computing f_s (Total-Strength I, and Service II) in uncracked sections, due to long-term composite (superimposed) dead loads ($in.^4$ and $in.^3$).

$I_c(cr)$, $S_c(cr)$: Composite moment of inertia and section modulus of the steel and longitudinal deck reinforcement, used for computing f_s (Total-Strength I and Service II) in cracked sections, due to both short-term composite live loads and long-term composite (superimposed) dead loads ($in.^4$ and $in.^3$).

DC1: Un-factored non-composite dead load (kips/ft.).

M_{DC1}: Un-factored moment due to non-composite dead load (kip-ft.).

DC2: Un-factored long-term composite (superimposed excluding future wearing surface) dead load (kips/ft.).

M_{DC2}: Un-factored moment due to long-term composite (superimposed excluding future wearing surface) dead load (kip-ft.).

DW: Un-factored long-term composite (superimposed future wearing surface only) dead load (kips/ft.).

M_{DW}: Un-factored moment due to long-term composite (superimposed future wearing surface only) dead load (kip-ft.).

M_{LL+IM}: Un-factored live load moment plus dynamic load allowance (impact) (kip-ft.).

M_u (Strength I): Factored design moment (kip-ft.).
$1.25\ (M_{DC1} + M_{DC2}) + 1.5\ M_{DW} + 1.75\ M_{LL+IM}$

$\phi_f M_n$: Compact composite positive moment capacity computed according to Article 6.10.7.1 or non-slender negative moment capacity according to Article A6.1.1 or A6.1.2 (kip-ft).

f_s DC1: Un-factored stress at edge of flange for controlling steel flange due to vertical non-composite dead loads as calculated below (ksi).
M_{DC1} / S_s

f_s DC2: Un-factored stress at edge of flange for controlling steel flange due to vertical composite dead loads as calculated below (ksi).
$M_{DC2} / S_c(3n)$ or $M_{DC2} / S_c(cr)$ as applicable.

f_s DW: Un-factored stress at edge of flange for controlling steel flange due to vertical composite future wearing surface loads as calculated below (ksi).
$M_{DW} / S_c(3n)$ or $M_{DW} / S_c(cr)$ as applicable.

f_s (LL+IM): Un-factored stress at edge of flange for controlling steel flange due to vertical composite live load plus impact loads as calculated below (ksi).
$M_{LL+IM} / S_c(n)$ or $M_{LL+IM} / S_c(cr)$ as applicable.

f_s (Service II): Sum of stresses as computed below (ksi).
$f_{sDC1} + f_{sDC2} + f_{sDW} + 1.3\ f_s(LL+IM)$

$0.95R_hF_{yf}$: Composite stress capacity for Service II loading according to Article 6.10.4.2 (ksi).

f_s (Total)(Strength I): Sum of stresses as computed below on non-compact section (ksi).
$1.25\ (f_{sDC1} + f_{sDC2}) + 1.5\ f_{sDW} + 1.75\ f_s(LL+IM)$

$\phi_f F_n$: Non-Compact composite positive or negative stress capacity for Strength I loading according to Article 6.10.7 or 6.10.8 (ksi).

V_f: Maximum factored shear range in span computed according to Article 6.10.10.

INTERIOR GIRDER REACTION TABLE - UNIT 1			
		W. Abut. or Pier 2-W	Pier 1
R_{DC1}	(k)	41.7	162.9
R_{DC2}	(k)	9.4	34.5
R_{DW}	(k)	15.2	56.0
R_{LL+IM}	(k)	87.3	179.6
R_{Total}	(k)	153.6	432.9

INTERIOR GIRDERS 2 TO 7 REACTION TABLE - UNIT 2				
		Pier 2-E	Pier 3	Pier C1-W
R_{DC1}	(k)	39.0	149.0	39.4
R_{DC2}	(k)	8.4	30.5	8.5
R_{DW}	(k)	14.7	53.3	14.9
R_{LL+IM}	(k)	88.1	174.7	88.2
R_{Total}	(k)	150.2	407.4	150.9

INTERIOR GIRDER 8 REACTION TABLE - UNIT 2				
		Pier 2-E	Pier 3	Pier C1-W
R_{DC1}	(k)	42.4	134.9	34.4
R_{DC2}	(k)	2.7	5.7	1.0
R_{DW}	(k)	16.0	47.3	12.9
R_{LL+IM}	(k)	113.2	177.1	98.2
R_{Total}	(k)	174.2	364.9	146.5

GIRDER 9 MOMENT TABLE - UNIT 2			
		0.4 Sp. 3	Pier 3
I_s	(in^4)	15,811	38,264
$I_c(n)$	(in^4)	40,610	-
$I_c(3n)$	(in^4)	30,343	-
$I_c(cr)$	(in^4)	-	41,641
S_s	(in^3)	782	1,733
$S_c(n)$	(in^3)	1,062	-
$S_c(3n)$	(in^3)	983	-
$S_c(cr)$	(in^3)	-	1,786
DC1	(k/')	0.92	0.81
M_{DC1}	('k)	854	1,658
DC2	(k/')	0.17	0.17
M_{DC2}	('k)	125	209
DW	(k/')	0.37	0.23
M_{DW}	('k)	323	493
M_{LL+IM}	('k)	1,551	1,087
M_u (Strength I)	('k)	4,423	4,976
$\phi_f M_n$	('k)	5,190	8,254
f_s DC1	(ksi)	13.1	11.5
f_s DC2	(ksi)	1.5	1.4
f_s DW	(ksi)	3.9	3.3
f_s (LL+IM)	(ksi)	17.5	7.3
f_s (Service II)	(ksi)	41.3	25.7
$0.95R_hF_{yf}$	(ksi)	47.5	47.5
f_s (Total)(Strength I)	(ksi)	-	-
$\phi_f F_n$	(ksi)	-	-
V_f	(k)	73.3	69.0

GIRDER 10 MOMENT TABLE - UNIT 2		
		0.1 Sp. 3
I_s	(in^4)	15,811
$I_c(n)$	(in^4)	39,461
$I_c(3n)$	(in^4)	29,219
$I_c(cr)$	(in^4)	-
S_s	(in^3)	782
$S_c(n)$	(in^3)	1,055
$S_c(3n)$	(in^3)	973
$S_c(cr)$	(in^3)	-
DC1	(k/')	0.84
M_{DC1}	('k)	47
DC2	(k/')	0.17
M_{DC2}	('k)	10
DW	(k/')	0.32
M_{DW}	('k)	18
M_{LL+IM}	('k)	289
M_u (Strength I)	('k)	604
$\phi_f M_n$	('k)	5,287
f_s DC1	(ksi)	0.7
f_s DC2	(ksi)	0.1
f_s DW	(ksi)	0.2
f_s (LL+IM)	(ksi)	3.3
f_s (Service II)	(ksi)	5.3
$0.95R_hF_{yf}$	(ksi)	47.5
f_s (Total)(Strength I)	(ksi)	-
$\phi_f F_n$	(ksi)	-
V_f	(k)	31.2

GIRDER 9 REACTION TABLE - UNIT 2			
		Pier 2-E	Pier 3
R_{DC1}	(k)	43.7	113.1
R_{DC2}	(k)	6.2	17.1
R_{DW}	(k)	16.5	35.9
R_{LL+IM}	(k)	109.7	138.4
R_{Total}	(k)	176.1	304.6

GIRDER 10 REACTION TABLE - UNIT 2		
		Pier 2-E
R_{DC1}	(k)	10.8
R_{DC2}	(k)	1.9
R_{DW}	(k)	3.8
R_{LL+IM}	(k)	54.7
R_{Total}	(k)	71.2

EXTERIOR GIRDER 11 MOMENT TABLE - UNIT 2				
		0.4 Sp. 3	Pier 3	0.6 Sp. 4
I_s	(in^4)	15,811	38,264	15,811
$I_c(n)$	(in^4)	38,424	-	39,631
$I_c(3n)$	(in^4)	28,262	-	29,381
$I_c(cr)$	(in^4)	-	41,630	-
S_s	(in^3)	782	1,733	782
$S_c(n)$	(in^3)	1,047	-	1,056
$S_c(3n)$	(in^3)	963	-	974
$S_c(cr)$	(in^3)	-	1,785	-
S_{xc}	(in^3)	42.7	120.3	42.7
DC1	(k/')	0.77	0.81	0.85
M_{DC1}	('k)	673	1,439	579
DC2	(k/')	0.17	0.17	0.17
M_{DC2}	('k)	164	260	81
DW	(k/')	0.22	0.16	0.26
M_{DW}	('k)	210	394	197
M_{LL+IM}	('k)	1,288	1,679	1,565
f_l (Strength I)	(ksi)	2.2	0.0	0.0
$M_u + \frac{1}{3} f_l S_{xc}$	('k)	3,618	5,653	3,859
$\phi_f M_n$	('k)	-	-	-
f_s DC1	(ksi)	10.3	10.0	8.9
f_s DC2	(ksi)	2.0	1.7	1.0
f_s DW	(ksi)	2.6	2.6	2.4
f_s (LL+IM)	(ksi)	14.8	11.3	17.8
f_l (Service II)	(ksi)	1.6	0.0	0.0
$f_s + f_l/2$ (Service II)	(ksi)	35.0	29.0	35.4
$0.95R_hF_{yf}$	(ksi)	47.5	47.5	47.5
$f_s + f_l/3$ (Total)(Strength I)	(ksi)	45.9	38.4	47.1
$\phi_f F_n$	(ksi)	50.0	48.2	50.0
V_f	(k)	57.8	79.4	79.4

EXTERIOR GIRDER 11 REACTION TABLE - UNIT 2				
		Pier 2-E	Pier 3	Pier C1-W
R_{DC1}	(k)	37.4	108.9	32.7
R_{DC2}	(k)	8.4	22.8	5.6
R_{DW}	(k)	10.5	27.1	9.6
R_{LL+IM}	(k)	72.8	150.0	84.1
R_{Total}	(k)	129.1	308.8	132.0

I_s, S_s: Non-composite moment of inertia and section modulus of the steel section used for computing f_s(Total-Strength I, and Service II) due to non-composite dead loads (in.^{4} and in.^{3}).

$I_c(n)$, $S_c(n)$: Composite moment of inertia and section modulus of the steel and deck based upon the modular ratio, "n", used for computing f_s(Total-Strength I, and Service II) in uncracked sections due to short term composite live loads (in.^{4} and in.^{3}).

$I_c(3n)$, $S_c(3n)$: Composite moment of inertia and section modulus of the steel and deck based upon 3 times the modular ratio, "3n", used for computing f_s(Total-Strength I, and Service II) in uncracked sections due to long-term composite (superimposed) dead loads (in.^{4} and in.^{3}).

$I_c(cr)$, $S_c(cr)$: Composite moment of inertia and section modulus of the steel and longitudinal deck reinforcement, used for computing f_s (Total-Strength I and Service II) in cracked sections, due to both short-term composite live loads and long-term composite (superimposed) dead loads (in.^{4} and in.^{3}).

S_{xc}: Section modulus about the major axis of section to the controlling flange, tension or compression, taken as yield moment with respect to the controlling flange over the yield strength of the controlling flange (in.^{3}).

DC1: Un-factored non-composite dead load (kips/ft.).

M_{DC1}: Un-factored moment due to non-composite dead load (kip-ft.).

DC2: Un-factored long-term composite (superimposed excluding future wearing surface) dead load (kips/ft.).

M_{DC2}: Un-factored moment due to long-term composite (superimposed excluding future wearing surface) dead load (kip-ft.).

DW: Un-factored long-term composite (superimposed future wearing surface only) dead load (kips/ft.).

M_{DW}: Un-factored moment due to long-term composite (superimposed future wearing surface only) dead load (kip-ft.).

M_{LL+IM}: Un-factored live load moment plus dynamic load allowance (impact)(kip-ft.).

M_u (Strength I): Factored design moment (kip-ft.).
$1.25\ (M_{DC1} + M_{DC2}) + 1.5\ M_{DW} + 1.75\ M_{LL+IM}$

f_l: Factored calculated normal stress at edge of flange for controlling flange plate due to lateral bending, Strength I or Service II as applicable (kip-ft.).

$\phi_f M_n$: Compact composite positive moment capacity computed according to Article 6.10.7.1 or non-slender negative moment capacity according to Article A6.1.1 or A6.1.2 (kip-ft.).

f_s DC1: Un-factored stress at edge of flange for controlling steel flange due to vertical non-composite dead loads as calculated below (ksi).
M_{DC1} / S_s

f_s DC2: Un-factored stress at edge of flange for controlling steel flange due to vertical composite dead loads as calculated below (ksi).
$M_{DC2} / S_c(3n)$ or $M_{DC2} / S_c(cr)$ as applicable.

f_s DW: Un-factored stress at edge of flange for controlling steel flange due to vertical composite future wearing surface loads as calculated below (ksi).
$M_{DW} / S_c(3n)$ or $M_{DW} / S_c(cr)$ as applicable.

f_s (LL+IM): Un-factored stress at edge of flange for controlling steel flange due to vertical composite live plus impact loads as calculated below (ksi).
$M_{LL+IM} / S_c(n)$ or $M_{LL+IM} / S_c(cr)$ as applicable.

$f_s + f_l/2$ (Service II): Sum of stresses as computed below (ksi).
$f_{s\,DC1} + f_{sDC2} + f_{sDW} + 1.3\ f_s(LL+IM) + f_l/2$

$0.95R_hF_{yf}$: Composite stress capacity for Service II loading according to Article 6.10.4.2 (ksi).

$f_s + f_l/3$ (Total)(Strength I): Sum of stresses as computed below on non-compact section (ksi).
$1.25\ (f_{sDC1} + f_{sDC2}) + 1.5\ f_{sDW} + 1.75\ f_s(LL+IM) + f_l/3$

$\phi_f F_n$: Non-Compact composite positive or negative stress capacity for Strength I loading according to Article 6.10.7 or 6.10.8 (ksi).

V_r: Maximum factored shear range in span computed according to Article 6.10.10.

Note:
M_{LL} and R_{LL} include the effects of centrifugal force and superelevation.

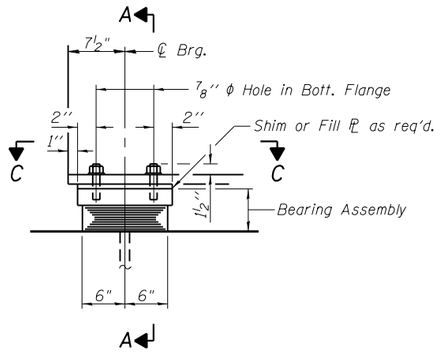

ELEVATION AT ABUT. OR PIER

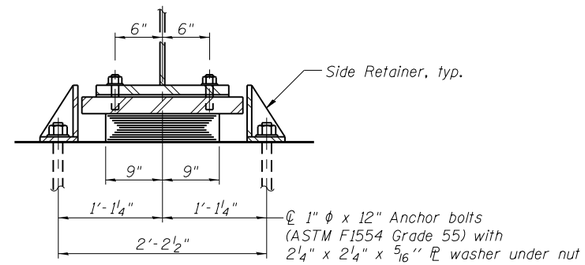

SECTION A-A

TYPE I ELASTOMERIC EXP. BRG.

(W. Abut. Pier 2W, Pier 2E & Pier C1W)

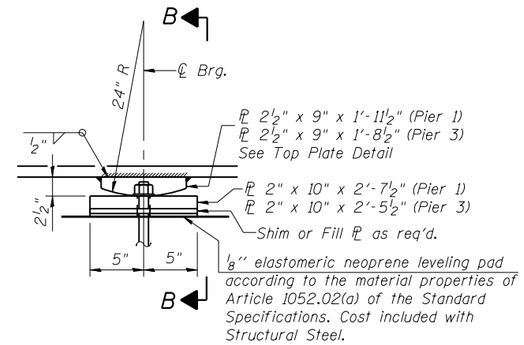

ELEVATION AT PIER

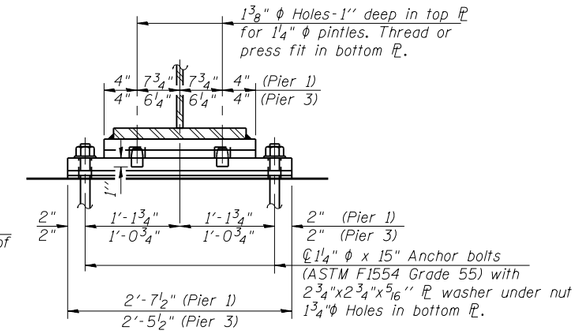

SECTION B-B

FIXED BEARING

(Pier 1 and Pier 3)

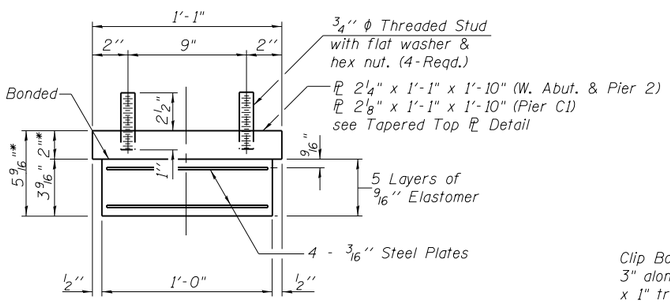

* Thickness at ℄ bearing.

BEARING ASSEMBLY

Note:
Shim plates shall not be placed under Bearing Assembly.

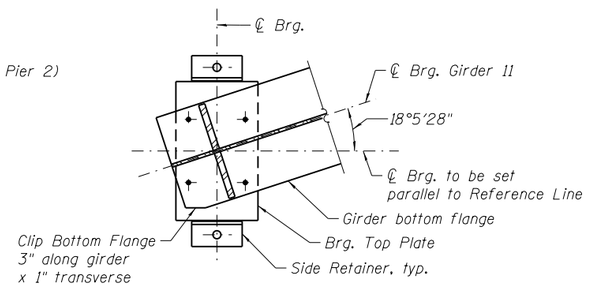

SECTION C-C

(Girder 11 at Pier 2 shown, other girders similar)

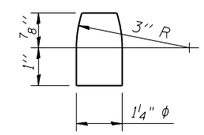

PINTLE

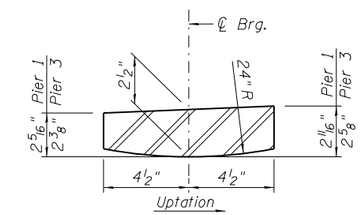

TOP PLATE DETAIL

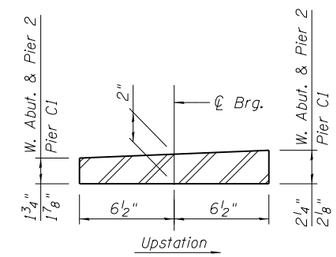

TAPERED TOP PL DETAIL

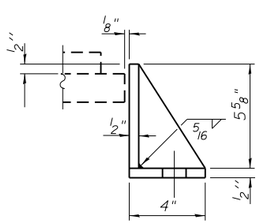

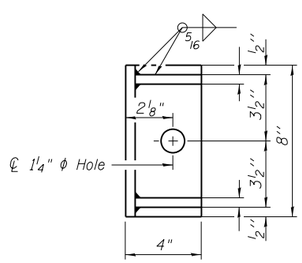

SIDE RETAINER

Equivalent rolled angle with stiffeners will be allowed in lieu of welded plates.

FILL PLATE THICKNESS TABLE

Girder No.	Pier 1	Pier C1 W.
2	⅜"	-
3	-	⅝"
4	⅜"	-
6	⅜"	-

BILL OF MATERIAL

Item	Unit	Total
Elastomeric Bearing Assembly, Type I	Each	34
Anchor Bolts, 1"	Each	68
Anchor Bolts, 1¼"	Each	34

NOTES:

1. Anchor bolts shall be ASTM F1554 all-thread (or an Engineer-approved alternate material) of the grade(s) and diameter(s) specified. The corresponding specified grade of AASHTO M314 anchor bolts may be used in lieu of ASTM F1554.
2. Anchor bolts at fixed bearings may be either cast in place or installed in holes drilled after the supported member is in place.
3. Anchor bolts for side retainers may be cast in place or installed in holes drilled before or after members are in place.
4. Drilled and set anchor bolts shall be installed according to Article 521.06 of the Standard Specifications.
5. Side retainers and other steel members required for the elastomeric bearing assembly shall be included in the cost of Elastomeric Bearing Assembly, Type I.
6. Fixed Bearing included in "Furnishing and Erecting Structural Steel."
7. Two ⅛ in. adjusting shims shall be provided for each bearing in addition to all other plates or shims and placed as shown on bearing details.
8. All bearing plates, side retainers, anchor bolts, nuts, washers and pintles shall be galvanized according to AASHTO M111 or M232 as applicable.
9. The structural steel for fixed bearing (including pintles) and elastomeric Bearing Assembly shall conform to the requirements of AASHTO M 270 Grade 50.

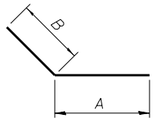

BARS

A & B DIMENSIONS

Bar	A	B
h406(E)	11'-5"	3'-0"
h407(E)	12'-0"	3'-0"
h408(E)	3'-0"	5'-0"
p403(E)	11'-5"	3'-0"

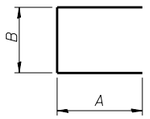

A & B DIMENSIONS

Bar	A	B
u401(E)	1'-4"	4'-11"
u402(E)	9'-4"	4'-10"

BARS

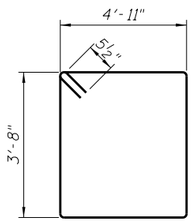

BAR s401(E)

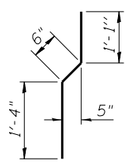

BAR v403(E)

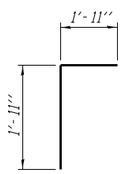

BAR v401(E)

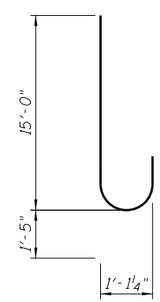

BAR v405(E)

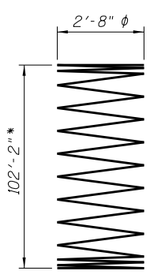

BAR sp401

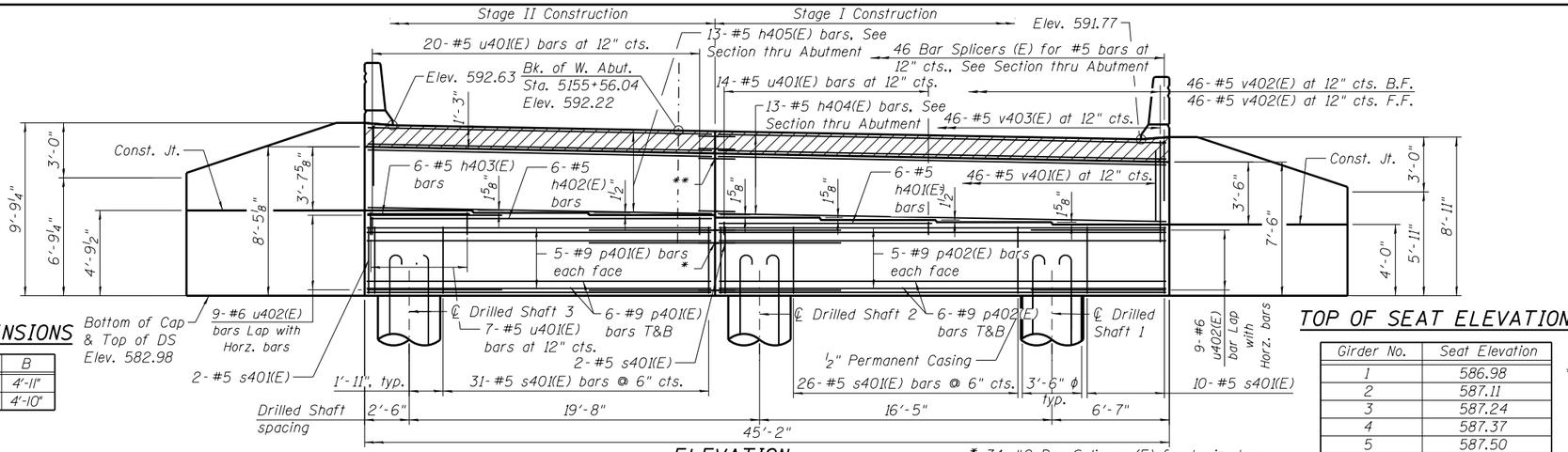

ELEVATION

* 34-#9 Bar Splicers (E) for horiz. bars
** 13-#5 Bar Splicers (E) for horiz. bars

TOP OF SEAT ELEVATION

Girder No.	Seat Elevation
1	586.98
2	587.11
3	587.24
4	587.37
5	587.50
6	587.64
7	587.77

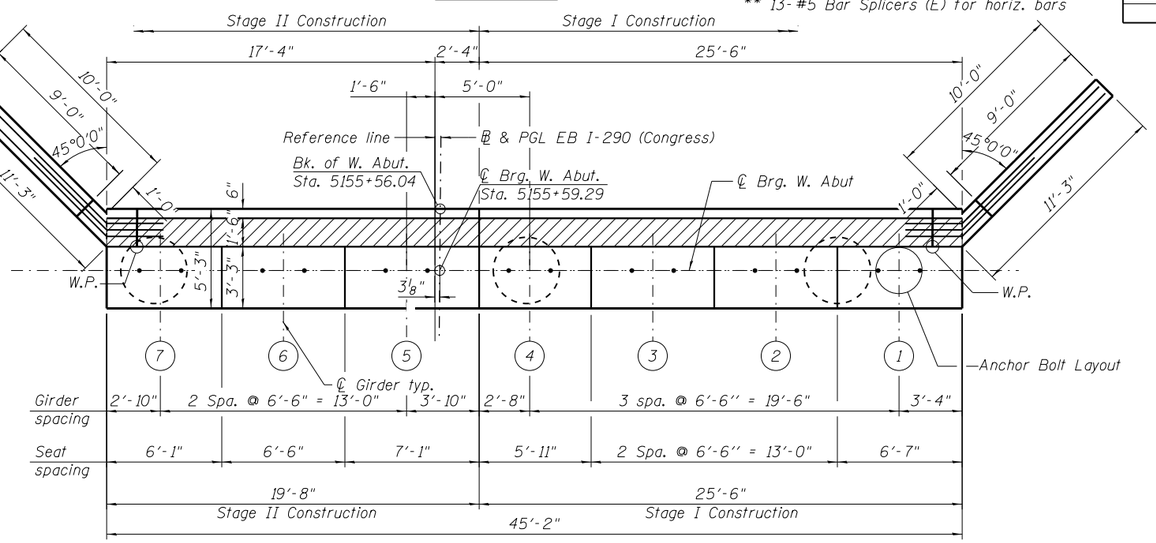

TOP VIEW

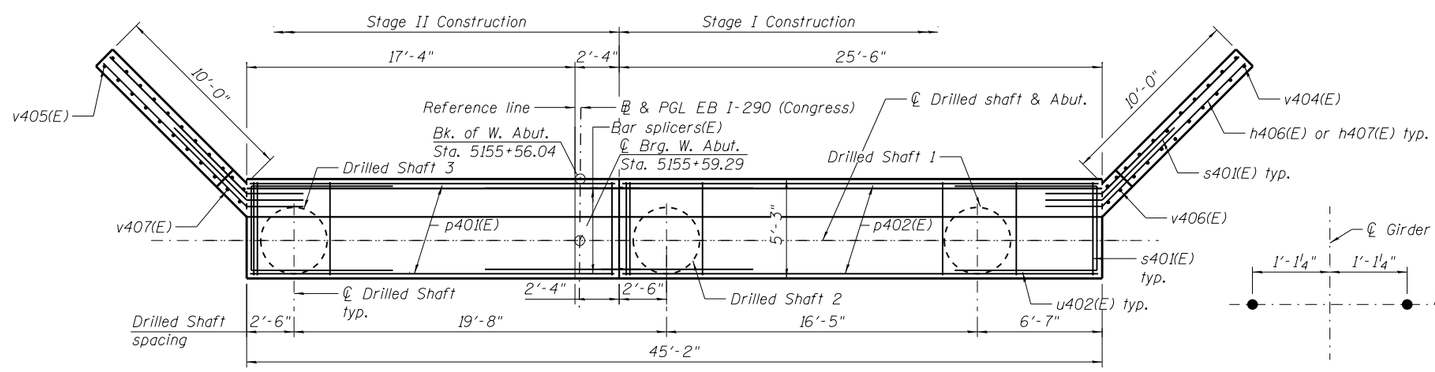

PLAN-PILE CAP

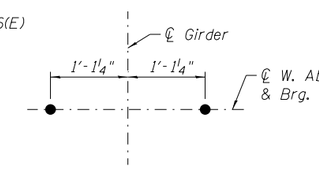

ANCHOR BOLT LAYOUT

BILL OF MATERIAL

Bar	No.	Size	Length	Shape
h401(E)	6	#5	12'-1"	
h402(E)	6	#5	19'-4"	
h403(E)	6	#5	5'-9"	
h404(E)	13	#5	19'-4"	
h405(E)	13	#5	25'-3"	
h406(E)	40	#7	14'-5"	
h407(E)	38	#7	15'-0"	
h408(E)	7	#7	8'-0"	
p401(E)	34	#9	19'-4"	
p402(E)	34	#9	25'-3"	
s401(E)	71	#5	18'-1"	
* sp401	3	#6	102'-2"	
u401(E)	41	#5	7'-7"	
u402(E)	18	#6	23'-6"	
v401(E)	46	#5	3'-10"	
v402(E)	92	#5	5'-8"	
v403(E)	46	#5	2'-11"	
v404(E)	9	#5	13'-11"	
v405(E)	9	#5	15'-8"	
v406(E)	4	#5	8'-7"	
v407(E)	4	#5	9'-5"	
v408(E)	36	#10	16'-5"	
v409	72	#10	41'-6"	
v410	36	#10	37'-6"	
Structure Excavation		Cu. Yd.	206	
Concrete Structures		Cu. Yd.	58.4	
Reinforcement Bars		Pound	26,500	
Reinforcement Bars, Epoxy Coated		Pound	14,520	
Slope Wall 4"		Sq. Yd.	151	
Permanent Casing		Foot	100	
Drilled Shaft in Soil		Cu. Yd.	105.9	
Drilled Shaft in Rock		Cu. Yd.	2.4	
Geocomposite Wall Drain		Sq. Yd.	58	
Crosshole Sonic Logging Access Ducts		Foot	306	
Crosshole Sonic Logging Access Testing		Each	1	
Granular Backfill for Structures		Cu. Yd.	115	
Pipe Underdrains for Structures 4"		Foot	66	

* Length is height of spiral

MINIMUM BAR LAP

(Unless Noted Otherwise)
#5 bar = 3'-7"
#6 bar = 4'-4"
#9 bar = 7'-1"

NOTES:

1. See sheet S1-37 for section thru Abutment.
2. Pour steps monolithically with cap.
3. Space reinforcement in cap to miss anchor bolts.
4. Bars noted thus, 3x2-#5 indicates 3 lines of bars with 2 lengths per line.
5. For detail of Bar Splicers, See Sheet S1-47.

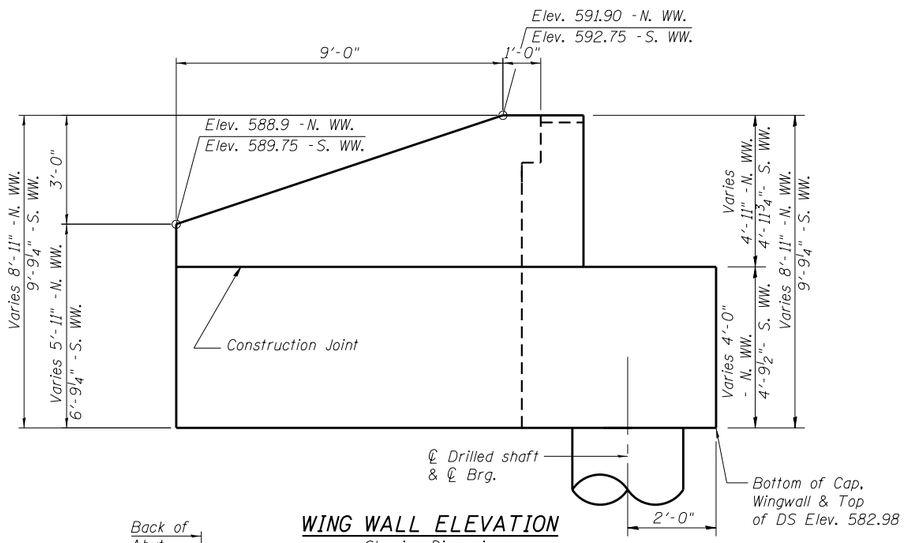

WING WALL ELEVATION

Showing Dimensions

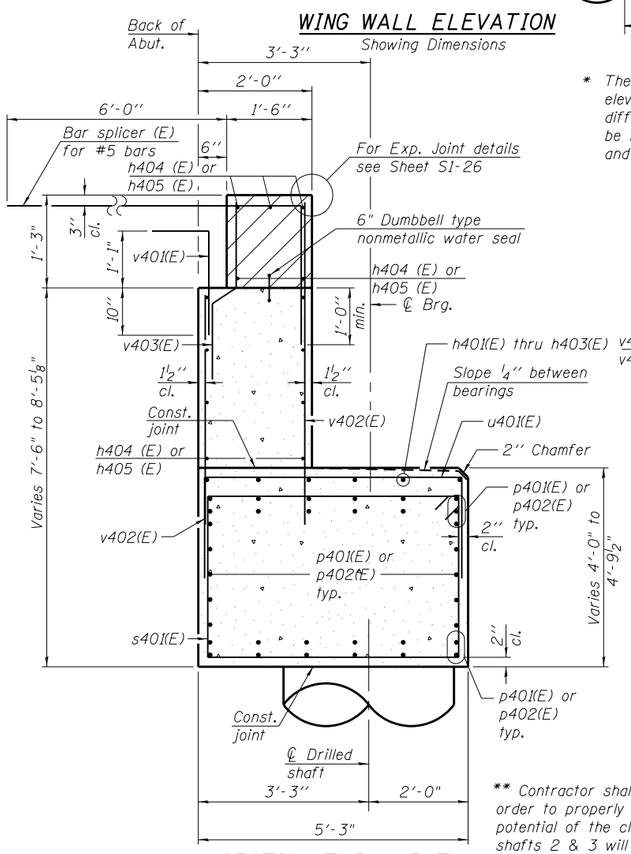

SECTION THRU ABUT.

* The quantities and detailing are based on the estimated elevations shown on the plans. The actual elevations may differ at each shaft and corresponding adjustments shall be made to the drilled shaft and reinforcment quantities and payment limits.

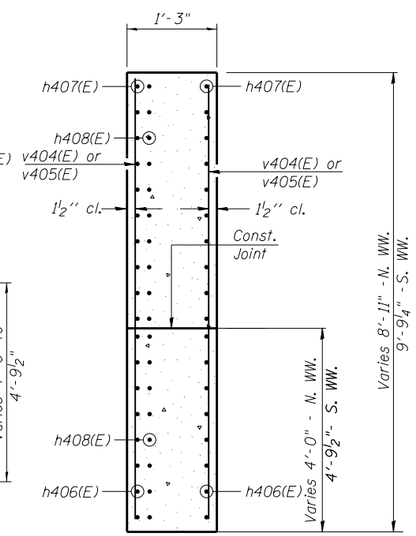

SECTION A-A

** Contractor shall adequately support drilled shaft excavation in order to properly construct drilled shafts. Due to high squeeze potential of the clay soils, the use of temporary casing at Drilled shafts 2 & 3 will be required to elevation ±541.0. Contractor shall perform squeeze analysis to determine actual casing limits. Temporary casing may be pulled or left in place, as determined by the Contractor, at no cost to the Department.

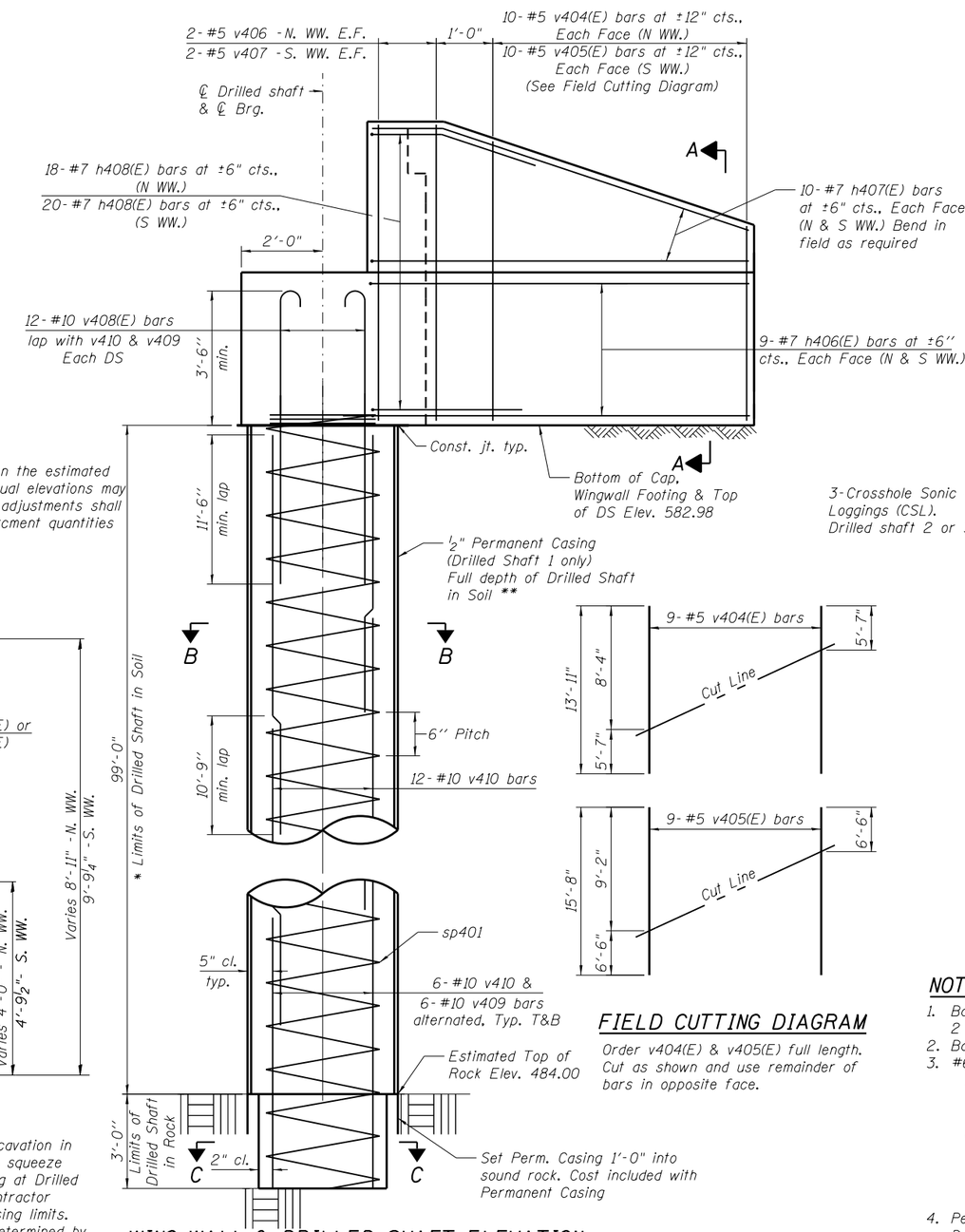

WING WALL & DRILLED SHAFT ELEVATION

Showing Reinforcement

FIELD CUTTING DIAGRAM

Order v404(E) & v405(E) full length. Cut as shown and use remainder of bars in opposite face.

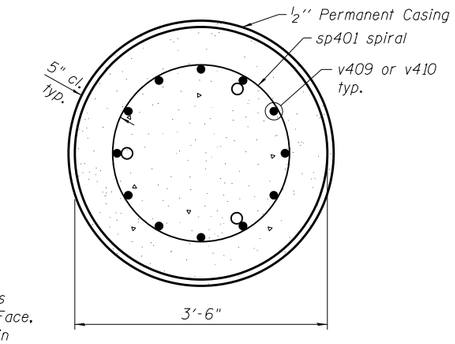

SECTION B-B

Drilled shaft 1 only

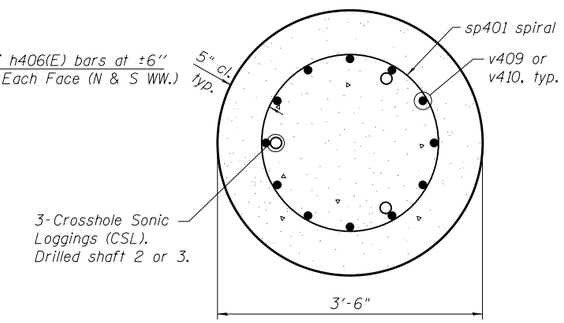

SECTION B-B

Drilled shaft 2&3

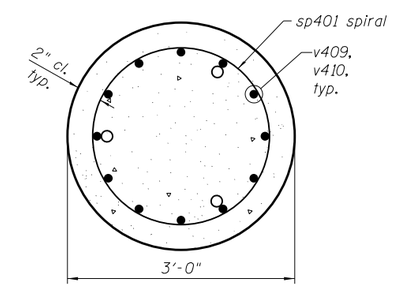

SECTION C-C

NOTES:

1. Bars noted thus, 14X2-#9 indicates 14 lines of bars with 2 lengths per line.
2. Bars equally spaced, unless otherwise noted.
3. #6 sp401 spiral, each drilled shaft
   1. Provide 1½ extra turns, shop welded together per AWS D1.4 top and bottom. Extend spiral 2" into crashwall. Provide 4-#4 spacers or equivalent.
   2. When splicing spiral reinforcement is necessary, the spiral shall be provided with 1½ extra turns at the ends to be spliced. These additional turns shall either be welded together according to AWS D1.4 or shall both terminate with a 135° standard hook.
4. Perform Crosshole Sonic Logging (CSL) testing on either Drilled Shaft 2 or 3.
5. For detail of Bar Splicers, See Sheet S1-47.

0161704-60X75-S37-Abutment Details.dgn

AECOM

USER NAME = floresg	DESIGNED - AV	REVISED	
	CHECKED - SD	REVISED	
PLOT SCALE = N.T.S.	DRAWN - AV	REVISED	
PLOT DATE = 6/28/2017	CHECKED - SD	REVISED	

STATE OF ILLINOIS
DEPARTMENT OF TRANSPORTATION

ABUTMENT DETAILS
STRUCTURE NO. 016-1704

SHEET NO. S1-37 OF S1-52 SHEETS

F.A.I. RTE.	SECTION	COUNTY	TOTAL SHEETS	SHEET NO.
90/94/290	2014-001 R&B	COOK	696	258

CONTRACT NO. 60X75

ILLINOIS FED. AID PROJECT

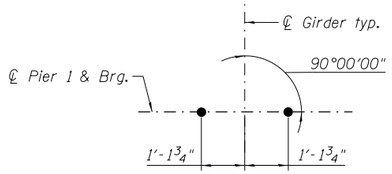

ANCHOR BOLT LAYOUT

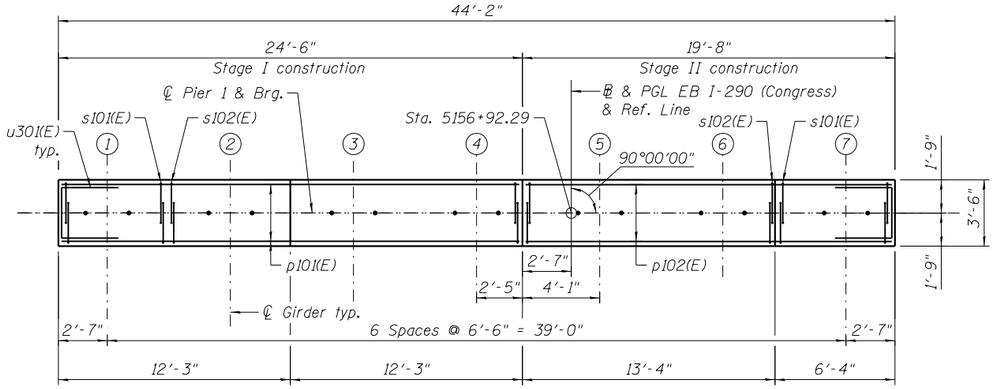

TOP PLAN

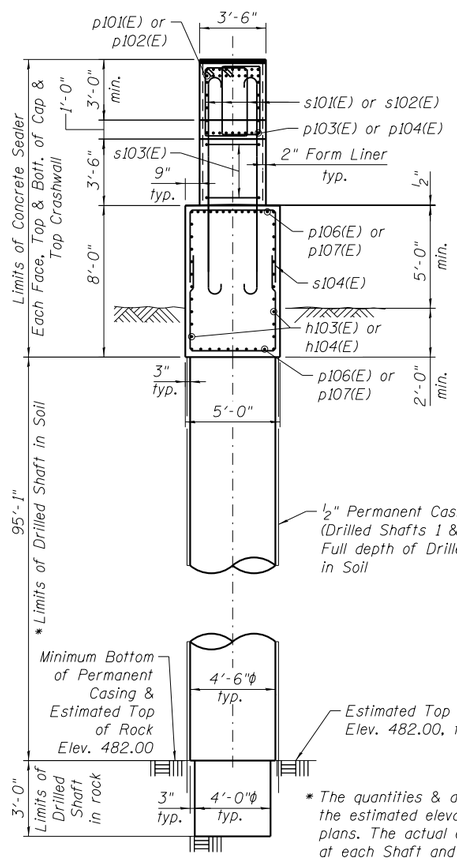

END VIEW

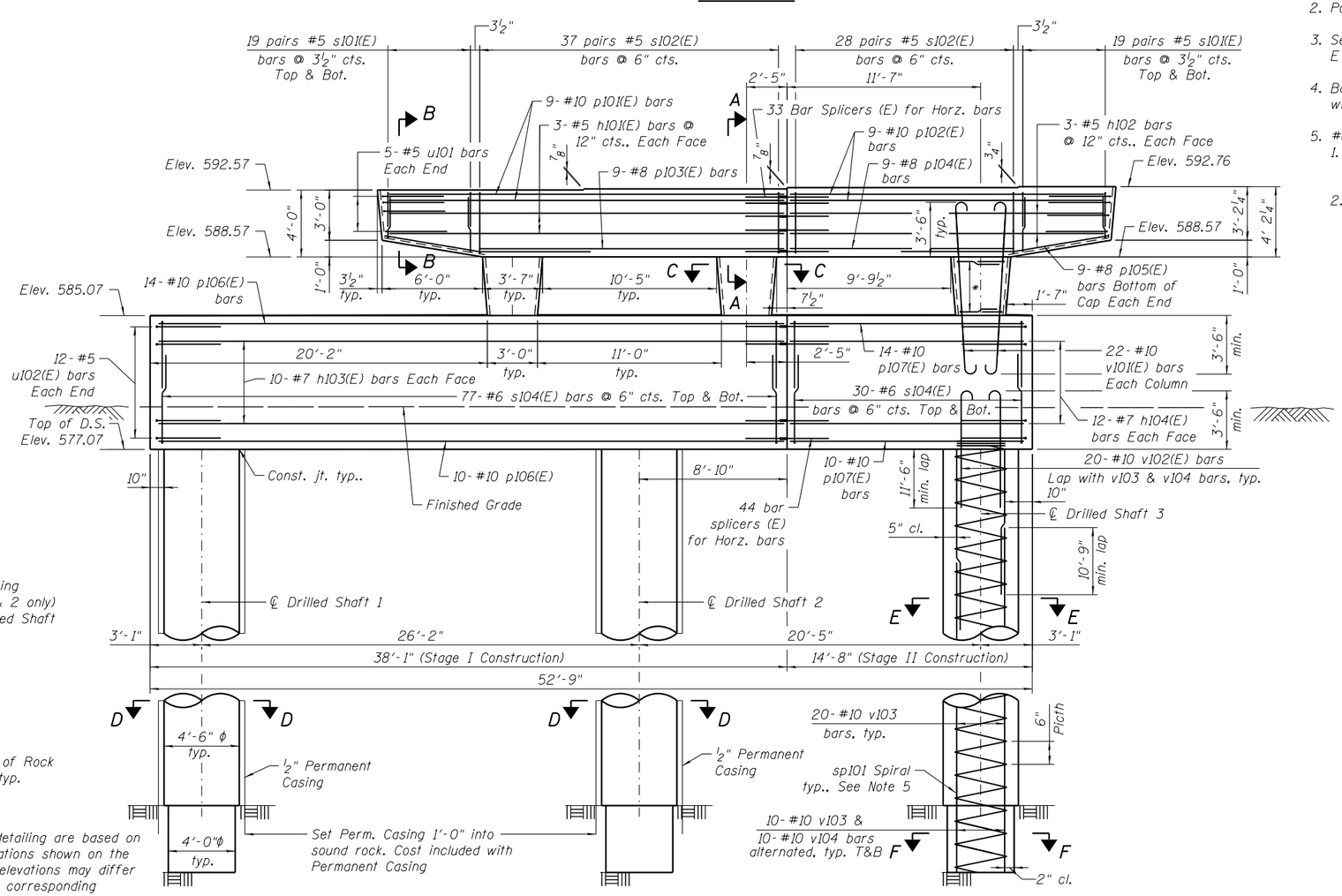

ELEVATION

(Looking East)

* The quantities & detailing are based on the estimated elevations shown on the plans. The actual elevations may differ at each Shaft and corresponding adjustments shall be made to the Drilled Shaft and reinforcement quantities and payment limits.

NOTES:

1. Space reinforcement in cap to miss anchor bolts.
2. Pour steps monolithically with cap.
3. See sheet S1-39 for section A-A, B-B, C-C, D-D, E-E, and F-F.
4. Bars noted thus, 3x2-#5 indicates 3 lines of bars with 2 lengths per line.
5. #6 sp101 spiral, each drilled shaft
   1. Provide 1½ extra turns, shop welded together per AWS D1.4 top and bottom. Extend spiral 2" into crashwall. Provide 4-#4 spacers or equivalent.
   2. When splicing spiral reinforcement is necessary, the spiral shall be provided with 1½ extra turns at the ends to be spliced. These additional turns shall either be welded together according to AWS D1.4 or shall both terminate with a 135° standard hook.

* 4 pairs - #5 s103(E) bars @ 12" cts.

MINIMUM BAR LAP

(Unless Noted Otherwise)

#5 bar = 3'-7"
#7 bar = 5'-0"
#8 bar = 8'-2"
#10 bar = 11'-6"

TOP OF SEAT ELEVATION

Girder No.	Seat Elevation
1	592.57
2	592.57
3	592.64
4	592.64
5	592.70
6	592.70
7	592.76

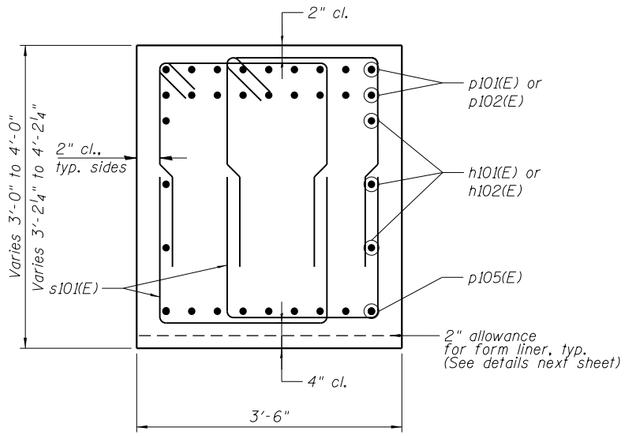

SECTION B-B

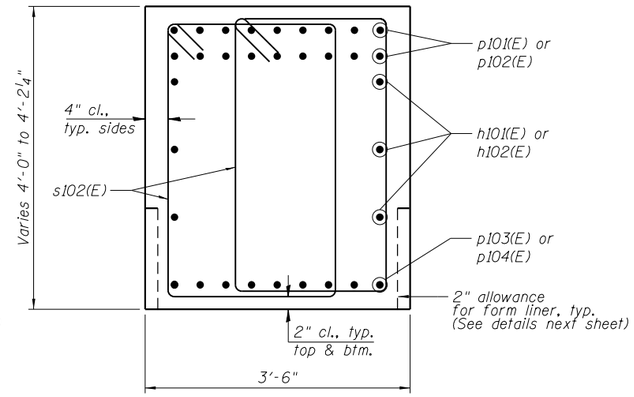

SECTION A-A

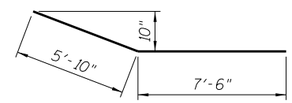

BAR p105(E)

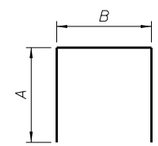

A & B DIMENSIONS

Bar	A	B
s101(E)	2'-7"	2'-3"
s103(E)	2'-3"	2'-10"
s104(E)	5'-8"	4'-8"
u101(E)	3'-9"	3'-2"
u102(E)	3'-9"	4'-8"

BILL OF MATERIAL

Bar	No.	Size	Length	Shape
h101(E)	6	#5	24'-1"	
h102(E)	6	#5	19'-2"	
h103(E)	20	#7	37'-10"	
h104(E)	20	#7	14'-4"	
p101(E)	18	#10	24'-1"	
p102(E)	18	#10	19'-2"	
p103(E)	9	#8	18'-5"	
p104(E)	9	#8	13'-6"	
p105(E)	18	#8	13'-4"	
p106(E)	24	#10	37'-10"	
p107(E)	24	#10	14'-4"	
s101(E)	152	#5	7'-5"	
s102(E)	130	#5	12'-9"	
s103(E)	24	#5	7'-4"	
s104(E)	214	#6	16'-0"	
* sp101	3	#6	98'-3"	
u101(E)	10	#5	10'-8"	
u102(E)	24	#5	12'-2"	
v101(E)	66	#10	13'-3"	
v102(E)	60	#10	16'-5"	
v103	120	#10	44'-7"	
v104	60	#10	32'-6"	
Structure Excavation			Cu. Yd.	44
Concrete Structures			Cu. Yd.	105.3
Reinforcement Bars			Pound	41,770
Reinforcement Bars, Epoxy Coated			Pound	29,200
Permanent Casing			Foot	193
Drilled Shaft in Soil			Cu. Yd.	168.1
Drilled Shaft in Rock			Cu. Yd.	4.2
Concrete Sealer			Sq. Ft.	2011
Crosshole Sonic Logging Acces Ducts			Foot	295
Crosshole Sonic Logging Testing			Each	1

* Length is height of spiral

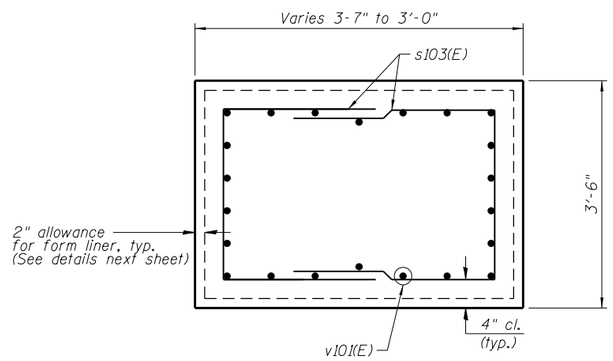

SECTION C-C

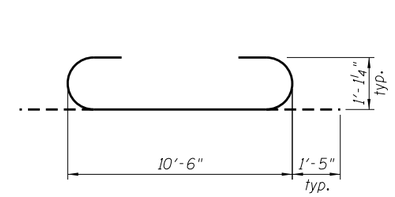

BAR v101(E)

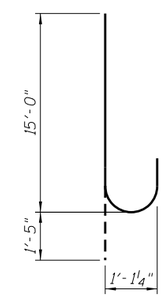

BAR v102(E)

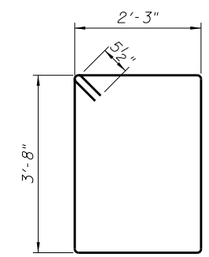

BAR s102(E)

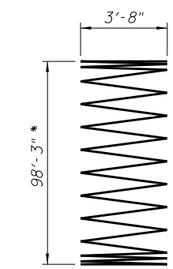

BAR sp101

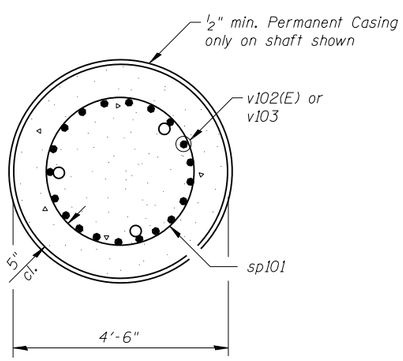

SECTION D-D

(Drilled Shafts 1 & 2 only)

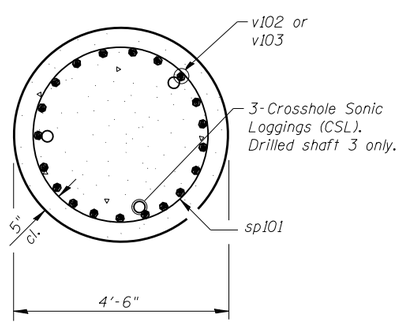

SECTION E-E

(Drilled Shaft 3 only)

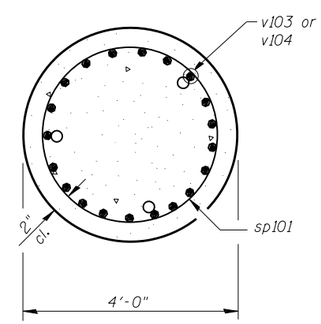

SECTION F-F

(All Drilled Shafts)

Notes:

1. Bars noted thus, 14x2-#9 indicated 14 lines of bars with 2 lengths of bars per line.
2. Bars equally spaced, unless otherwise noted.
3. Apply concrete sealer to all exposed concrete surfaces of the pier.
4. All edges shall have standard ¾" chamfer.
5. The quantities and reinforcement detailing are based on the footing elevation and estimated top of rock elevation shown and may change depending on the actual top of rock encountered at each shaft. It is the Contractor's responsibility to make necessary, approved adjustments.
6. When Contractor's means and methods include initiating drilling for shafts at elevations higher than the final top of shaft elevation (e.g. Existing Ground Elevation), the costs for drilling, disposing of excavation, providing casing and backfilling of drilled shafts or other appurtenant work activities in the areas between the elevation where drilling is initiated and the proposed elevation of the top of shaft shall not be paid for separated but shall be included in the cost of Drilled Shaft in Soil.
7. Perform Crosshole Sonic Logging (CSL) testing on Drilled Shaft 3.

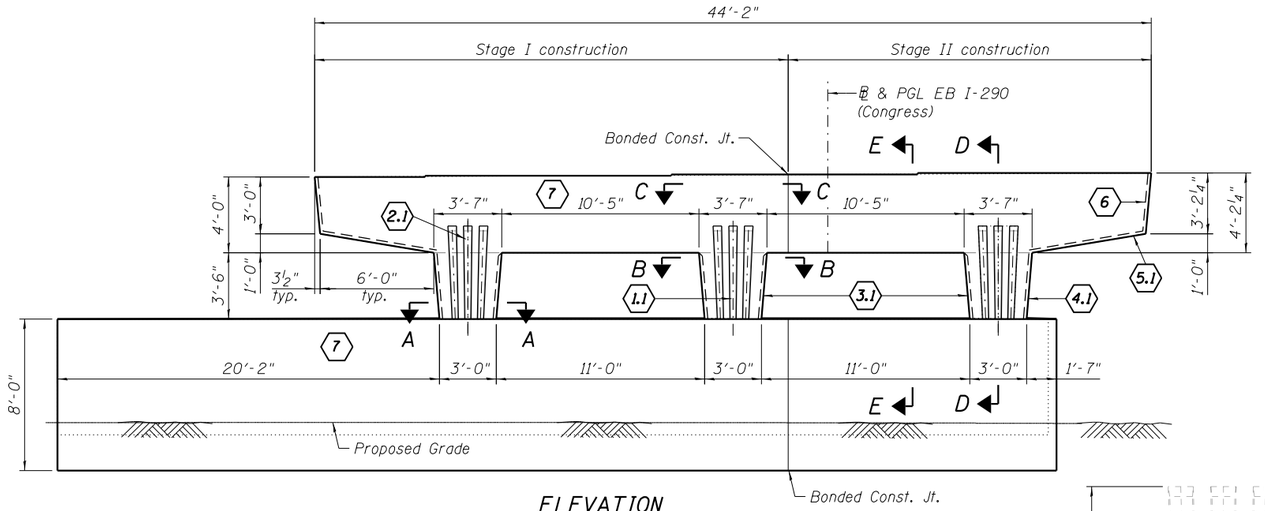

ELEVATION

(Looking East)
(Looking West-similar, Opposite hand)

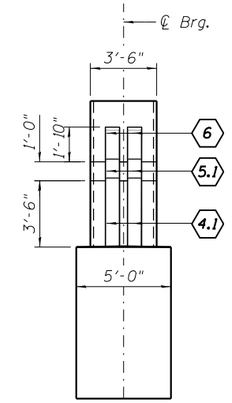

PIER END VIEW

(Looking North)
(Looking South - sim.)

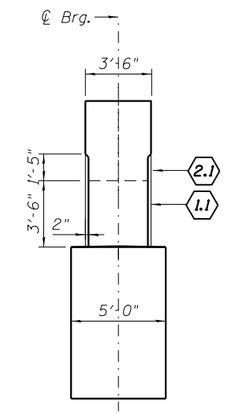

SECTION D-D

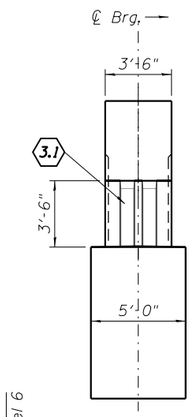

SECTION E-E

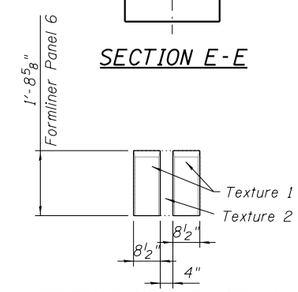

FORM LINER PANEL 6

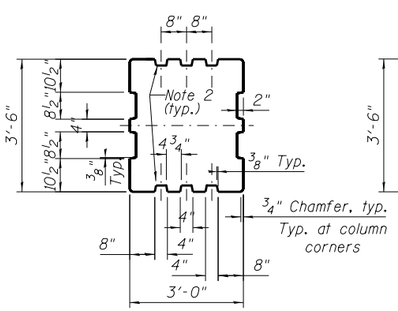

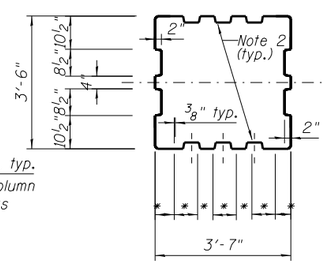

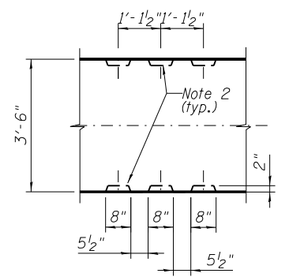

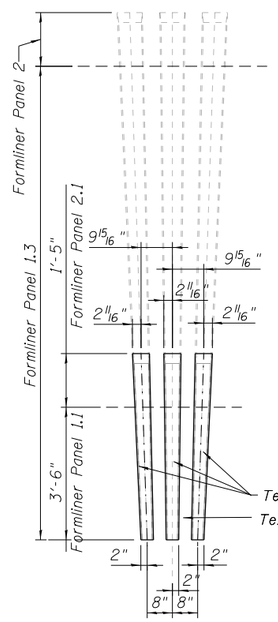

FORM LINER PANEL 1.1 & 2.1

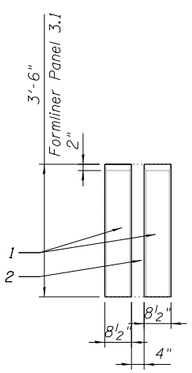

FORM LINER PANEL 3.1

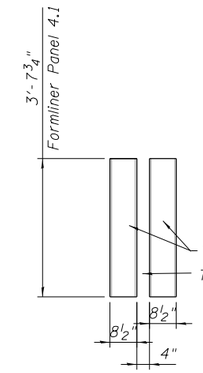

FORM LINER PANEL 4.1

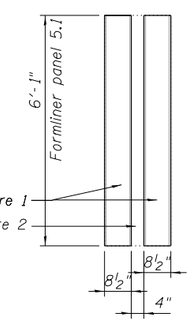

FORM LINER PANEL 5.1

NOTES:

1. Surface indicated as (7) represents all surface except formliner and shall have smooth rubbed finish. Cost included with pay item Rubbed Finish.
2. Tapered fluting - dimensions vary, see elevation profile.
3. Formliner panel (2) is continuation of panel (1). Keep adjacent formliners aligned.
4. Hand clean and smooth the surface of the construction joint between the pier and cap.
5. Texture 1: Light Sandblast, 1/16" depth, as selected from samples provided by the Contractor.
   Texture 2: Smooth
6. The three flutes at Form liner panel 1.1, 1.2 and 1.3 have same geometry but are different at the top and bottom.
7. For pier dimensions see structural drawings S1-38 to S1-45

LEGEND

(1) (2) (3) (4) (5) (6) — Textured Form Liner

(7) — Rubbed finish

BILL OF MATERIAL

Item	Unit	Total
Form Liner Textured Surface	Sq. Ft.	122
Rubbed Finish	Sq. Ft.	1,455

Notes:

1. Space reinforcement in cap to miss anchor bolts.

2. Pour steps monolithically with cap.

3. See sheet S1-42 for section A-A, B-B, C-C, D-D, E-E, and F-F.

4. Bars noted thus, 3x2-#5 indicates 3 lines of bars with 2 lengths of bars per line.

5. #6 sp201 spiral, each drilled shaft
   1. Provide 1½ extra turns, shop welded together per AWS D1.4 top and bottom. Extend spiral 2" into crashwall. Provide 4-#4 spacers or equivalent.
   2. When splicing spiral reinforcement is necessary, the spiral shall be provided with 1½ extra turns at the ends to be spliced. These additional turns shall either be welded together according to AWS D1.4 or shall both terminate with a 135° standard hook.

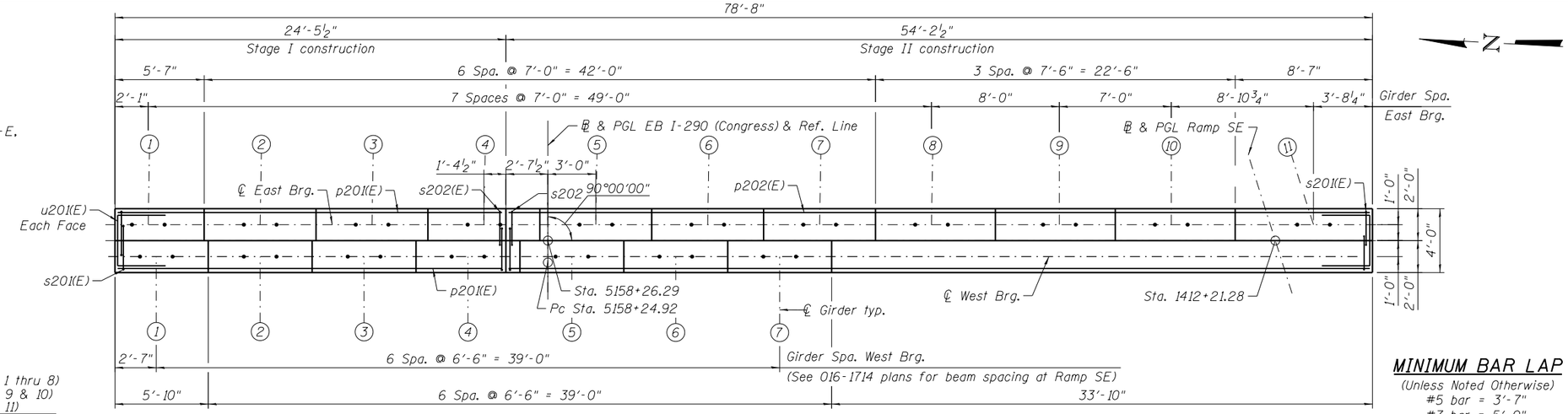

TOP PLAN

MINIMUM BAR LAP

(Unless Noted Otherwise)
#5 bar = 3'-7"
#7 bar = 5'-0"
#8 bar = 5'-1"
#10 bar = 11'-6"

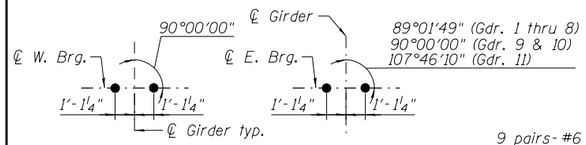

ANCHOR BOLT LAYOUTS

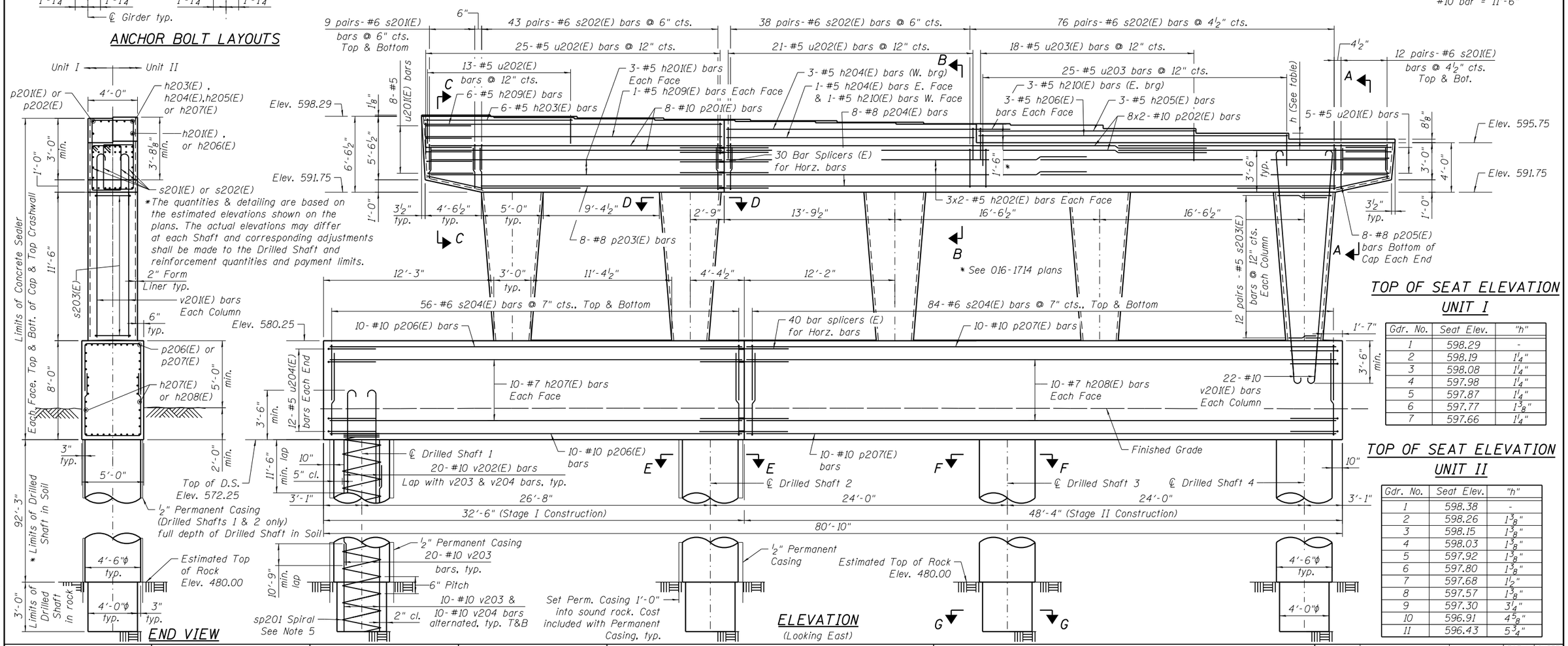

END VIEW

ELEVATION

(Looking East)

TOP OF SEAT ELEVATION UNIT I

Gdr. No.	Seat Elev.	"h"
1	598.29	-
2	598.19	1¼"
3	598.08	1¼"
4	597.98	1¼"
5	597.87	1¼"
6	597.77	1⅜"
7	597.66	1¼"

TOP OF SEAT ELEVATION UNIT II

Gdr. No.	Seat Elev.	"h"
1	598.38	-
2	598.26	1⅜"
3	598.15	1⅜"
4	598.03	1⅜"
5	597.92	1⅜"
6	597.80	1⅜"
7	597.68	1½"
8	597.57	1⅜"
9	597.30	3¼"
10	596.91	4⅝"
11	596.43	5¾"

AECOM

USER NAME = floresg	DESIGNED - AV	REVISED	
	CHECKED - SD	REVISED	
PLOT SCALE = N.T.S.	DRAWN - GF	REVISED	
PLOT DATE = 6/28/2017	CHECKED - SD	REVISED	

STATE OF ILLINOIS
DEPARTMENT OF TRANSPORTATION

PIER 2
STRUCTURE NO. 016-1704

SHEET NO. S1-41 OF S1-52 SHEETS

F.A.I. RTE.	SECTION	COUNTY	TOTAL SHEETS	SHEET NO.
90/94/290	2014-001 R&B	COOK	696	262

CONTRACT NO. 60X75

ILLINOIS FED. AID PROJECT

016I704-60X75-S41-Pier2.dgn

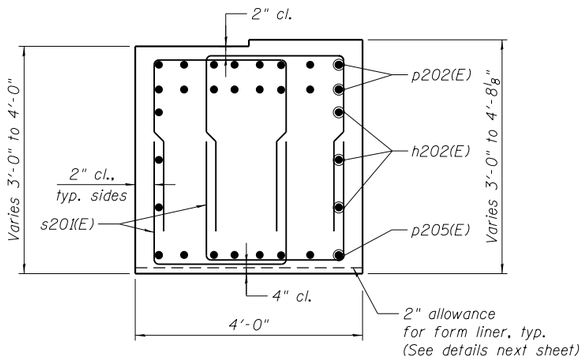

SECTION A-A

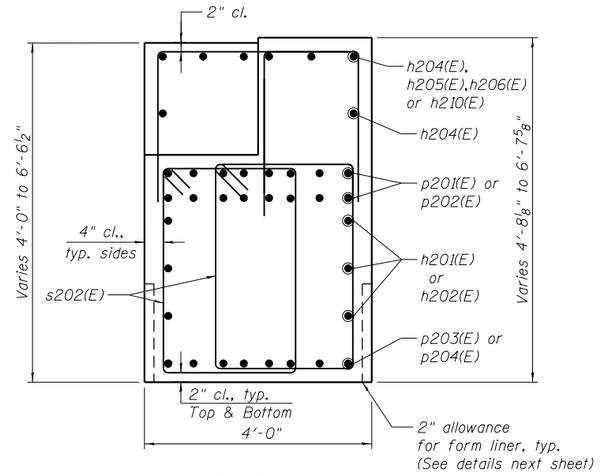

SECTION B-B

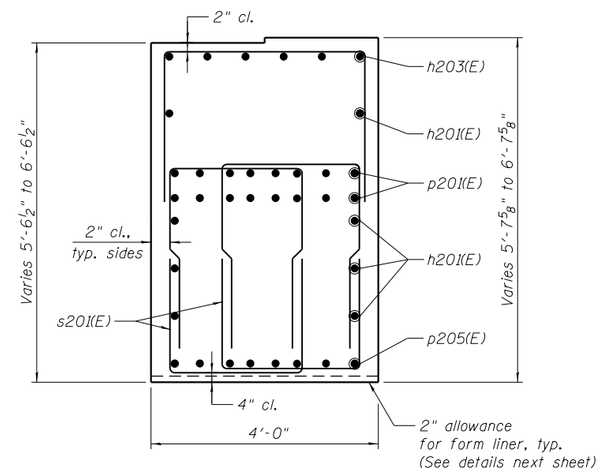

SECTION C-C

BILL OF MATERIAL

	Bar	No.	Size	Length	Shape
	h201(E)	6	#5	24'-0"	
	h202(E)	12	#5	28'-11"	
	h203(E)	6	#5	12'-3"	
	h204(E)	4	#5	20'-2"	
	h205(E)	3	#5	17'-7"	
	h206(E)	3	#5	25'-0"	
	h207(E)	20	#7	32'-3"	
	h208(E)	20	#7	48'-0"	
	h209(E)	8	#5	23'-5"	
	h210(E)	4	#5	22'-11"	
	p201(E)	16	#10	24'-0"	
	p202(E)	32	#10	32'-9"	
	p203(E)	8	#8	19'-7"	
	p204(E)	8	#8	49'-3"	
	p205(E)	16	#8	11'-11"	
	p206(E)	20	#10	32'-3"	
	p207(E)	20	#10	48'-0"	
	s201(E)	84	#6	8'-4"	
	s202(E)	314	#6	14'-2"	
	s203(E)	120	#5	8'-0"	
	s204(E)	280	#6	16'-2"	
*	sp201	4	#6	95'-4"	
	u201(E)	13	#5	11'-2"	
	u202(E)	59	#5	8'-4"	
	u203(E)	43	#5	6'-6"	
	u204(E)	25	#5	12'-2"	
	v201(E)	110	#10	21'-10"	
	v202(E)	80	#10	16'-5"	
	v203	160	#10	39'-6"	
	v204	80	#10	32'-6"	
	Structure Excavation			Cu. Yd.	66
	Concrete Structures			Cu. Yd.	216.4
	Reinforcement Bars			Pound	51,790
	Reinforcement Bars, Epoxy Coated			Pound	52,220
	Permanent Casing			Foot	188
	Drilled Shaft in Soil			Cu. Yd.	217.4
	Drilled Shaft in Rock			Cu. Yd.	5.6
	Concrete Sealer			Sq. Ft.	4182
	Crosshole Sonic Logging Access Ducts			Foot	381
	Crosshole Sonic Logging Testing			Each	1

* Length is height of spiral

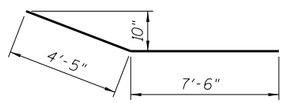

BAR p205(E)

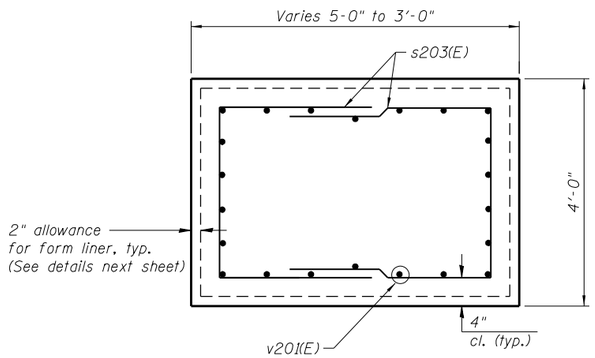

SECTION D-D

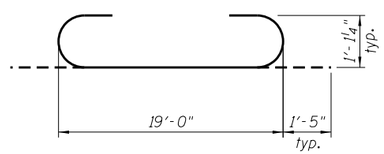

BAR v201(E)

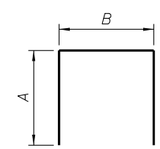

A & B DIMENSIONS

Bar	A	B
s201(E)	2'-6"	3'-4"
s203(E)	2'-4"	3'-4"
s204(E)	5'-9"	4'-8"
u201(E)	3'-9"	3'-8"
u202(E)	2'-6"	3'-4"
u203(E)	2'-6"	1'-6"
u204(E)	3'-9"	4'-8"

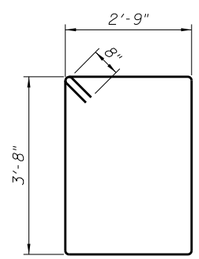

BAR s202(E)

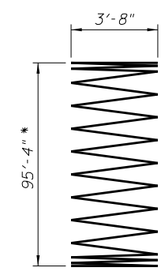

BAR sp201

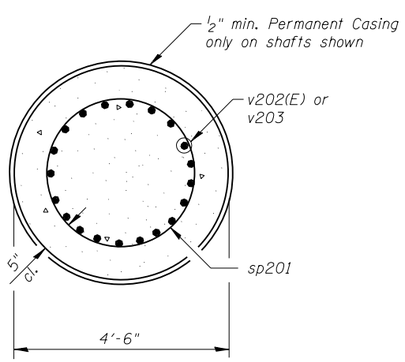

SECTION E-E

(Drilled Shafts 1 & 2 only)

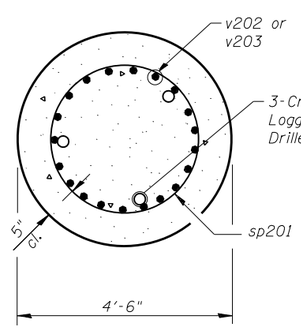

SECTION F-F

(Drilled Shafts 3 & 4 only)

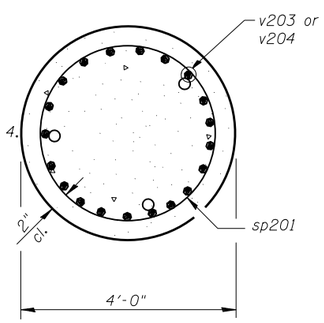

SECTION G-G

(All Drilled Shafts)

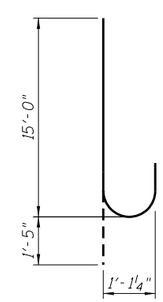

BAR v202(E)

Notes:

1. Bars noted thus, 14x2-#9 indicated 14 lines of bars with 2 lengths of bars per line.
2. Bars equally spaced, unless otherwise noted.
3. Apply concrete sealer to all exposed concrete surfaces of the pier.
4. All edges shall have standard 3/4" chamfer.
5. The quantities and reinforcement detailing are based on the footing elevation and estimated top of rock elevation shown and may change depending on the actual top of rock encountered at each shaft. It is the Contractor's responsibility to make necessary, approved adjustments.
6. When Contractor's means and methods include initiating drilling for shafts at elevations higher than the final top of shaft elevation (e.g. Existing Ground Elevation), the costs for drilling, disposing of excavation, providing casing and backfilling of drilled shafts or other appurtenant work activities in the areas between the elevation where drilling is initiated and the proposed elevation of the top of shaft shall not be paid for separated but shall be included in the cost of Drilled Shaft in Soil.
7. Perform Crosshole Sonic Logging (CSL) testing on either Drilled shaft 3 or 4.

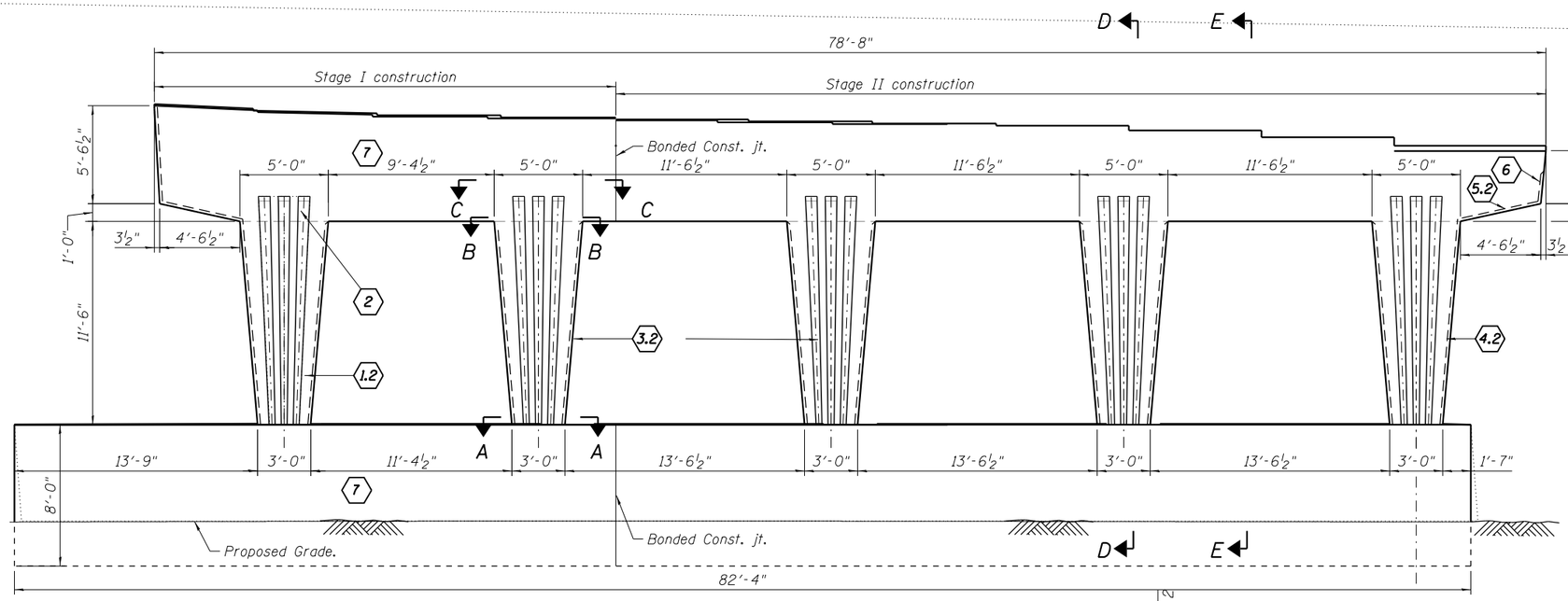

PIER ELEVATION

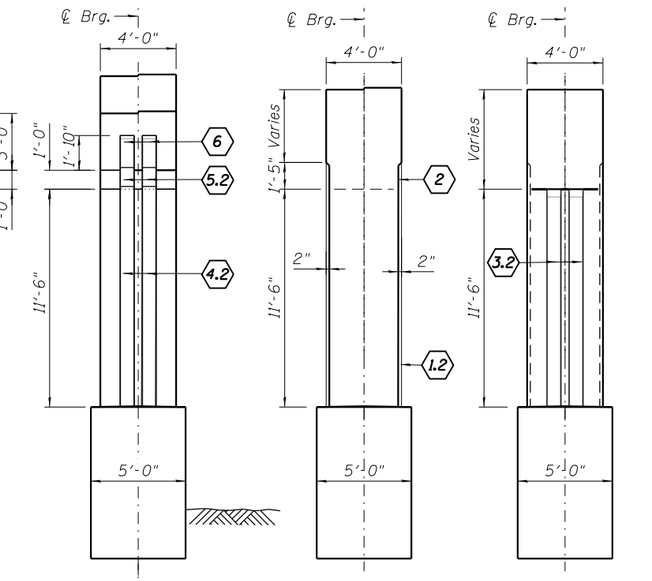

PIER END VIEW
(Looking South)
(Looking North - sim.)

SECTION D-D

SECTION E-E

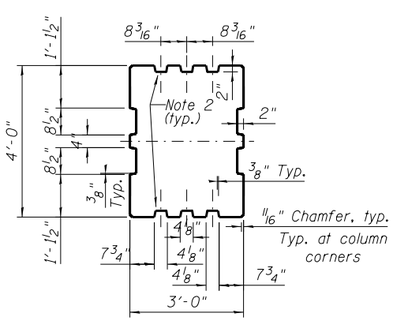

SECTION A-A
At Bottom of Column

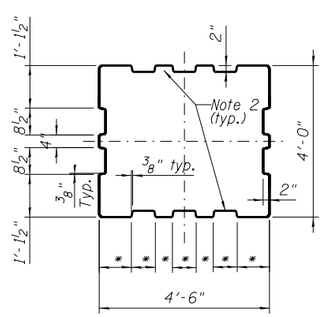

SECTION B-B
At Top of Column

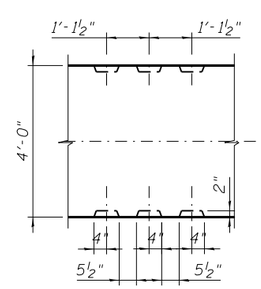

SECTION C-C
In Cap

* Dimensions of formliner at top of column (panel 1) to match dimensions of formliner at bottom of pier cap (panel 2).

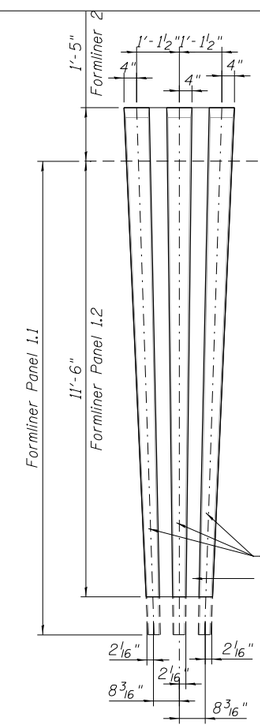

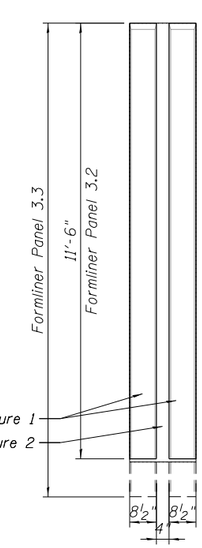

FORM LINER PANEL 3.2

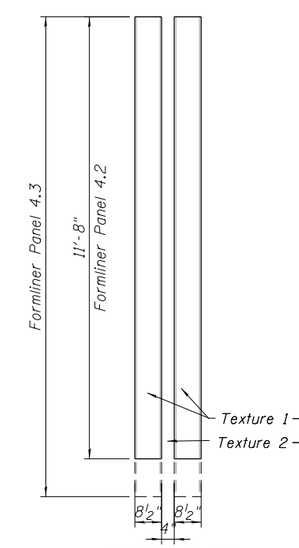

FORM LINER PANEL 4.2

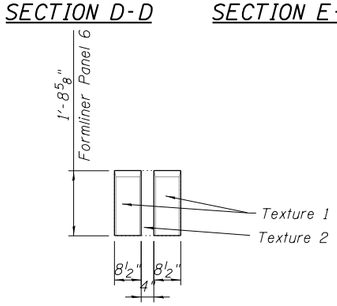

FORM LINER PANEL 6

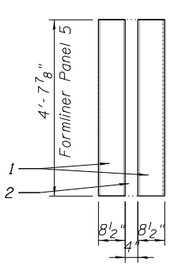

FORM LINER PANEL 5.2

NOTES:

1. Surface indicated as (7) represents all surface except formliner and shall have smooth rubbed finish. Cost included with pay item Rubbed Finish.
2. Tapered fluting - dimensions vary, see elevation profile.
3. Formliner panel (2) is continuation of panel (1). Keep adjacent formliners aligned.
4. Hand clean and smooth the surface of the construction joint between the pier and cap.
5. Texture 1: Light Sandblast, 1/16" depth, as selected from samples provided by the Contractor.
   Texture 2: Smooth
6. The three flutes at Form liner panel 1.1, 1.2 and 1.3 have same geometry but are different at the top and bottom.
7. For pier dimentions refer to structural drawings S1-38 to S1-45

LEGEND

(1) (2) (3) (4) (5) (6) — Textured Form Liner

(7) — Rubbed finish

BILL OF MATERIAL

Item	Unit	Total
Form Liner Textured Surface	Sq. Ft.	537
Rubbed Finish	Sq. Ft.	2,918

0161704-60X75-S43-Pier2 Details.dgn

AECOM

USER NAME = floresg	DESIGNED - AV	REVISED	
	CHECKED - SD	REVISED	
PLOT SCALE = N.T.S.	DRAWN - GF	REVISED	
PLOT DATE = 6/28/2017	CHECKED - SD	REVISED	

STATE OF ILLINOIS
DEPARTMENT OF TRANSPORTATION

PIER 2 DETAILS – 2
STRUCTURE NO. 016-1704
SHEET NO. S1-43 OF S1-52 SHEETS

F.A.I. RTE.	SECTION	COUNTY	TOTAL SHEETS	SHEET NO.
90/94/290	2014-001 R&B	COOK	696	264

CONTRACT NO. 60X75
ILLINOIS FED. AID PROJECT

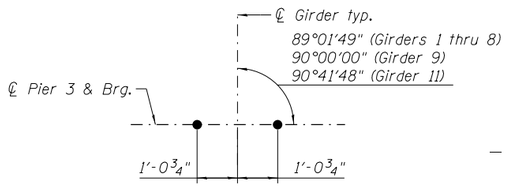

ANCHOR BOLT LAYOUT

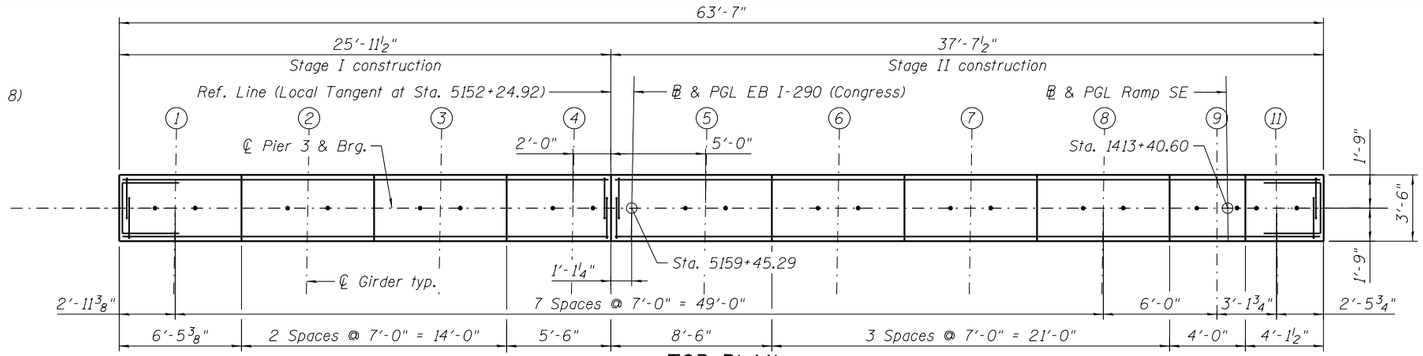

TOP PLAN

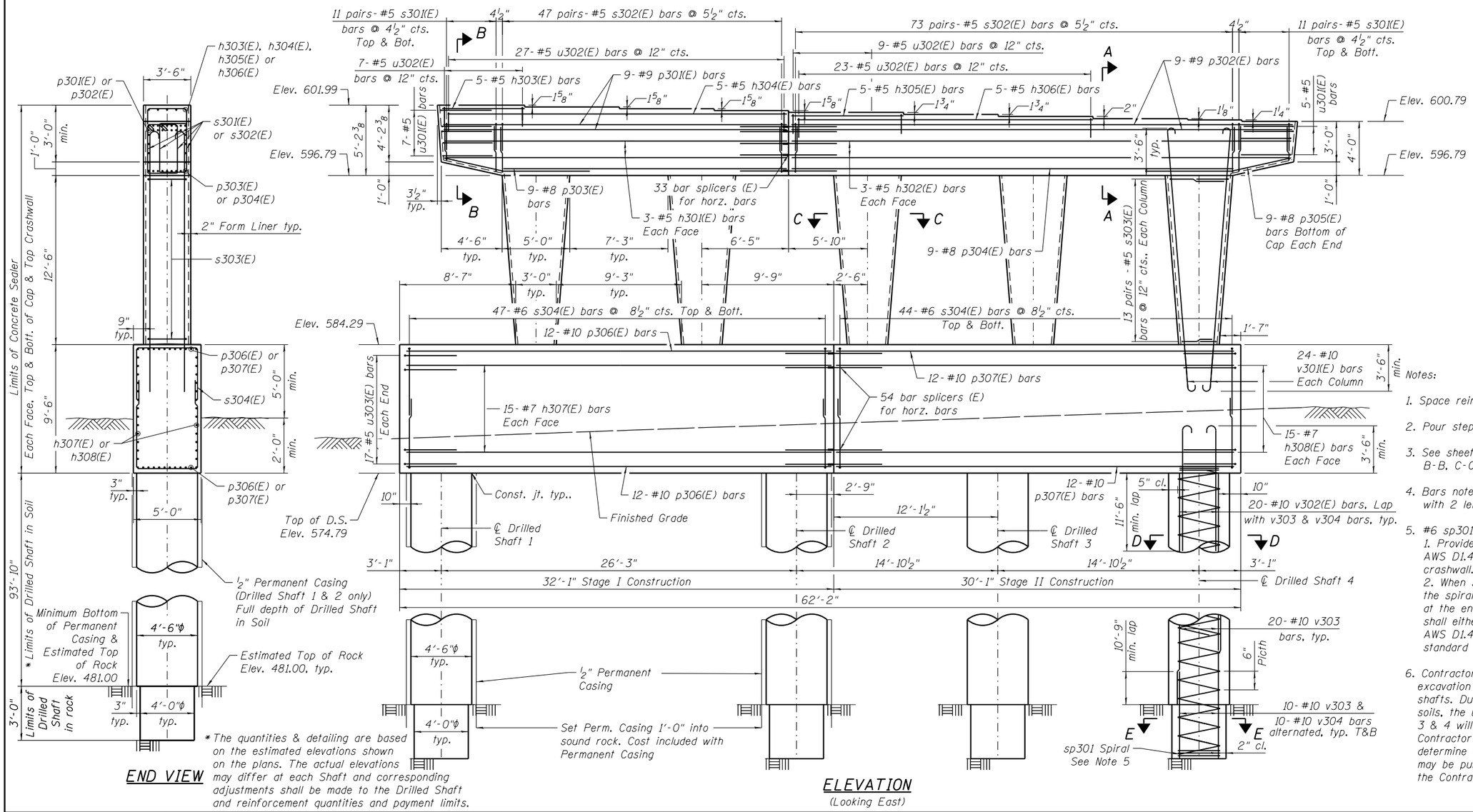

END VIEW

ELEVATION
(Looking East)

* The quantities & detailing are based on the estimated elevations shown on the plans. The actual elevations may differ at each Shaft and corresponding adjustments shall be made to the Drilled Shaft and reinforcement quantities and payment limits.

MINIMUM BAR LAP

(Unless Noted Otherwise)

#5 bar = 3'-7"
#7 bar = 5'-0"
#8 bar = 5'-1"
#9 bar = 10'-4"
#10 bar = 11'-6"

TOP OF SEAT ELEVATION

Girder No.	Seat Elevation
1	601.99
2	601.86
3	601.72
4	601.59
5	601.45
6	601.31
7	601.16
8	600.99
9	600.90
11	600.79

Notes:

1. Space reinforcement in cap to miss anchor bolts.
2. Pour steps monolithically with cap.
3. See sheet S1-45 for section A-A, B-B, C-C, D-D, E-E, and F-F.
4. Bars noted thus, 3x2-#5 indicates 3 lines of bars with 2 lengths of bars per line.
5. #6 sp301 spiral, each drilled shaft
   1. Provide 1 1/2 extra turns, shop welded together per AWS D1.4 top and bottom. Extend spiral 2" into crashwall. Provide 4-#4 spacers or equivalent.
   2. When splicing spiral reinforcement is necessary, the spiral shall be provided with 1 1/2 extra turns at the ends to be spliced. These additional turns shall either be welded together according to AWS D1.4 or shall both terminate with a 135° standard hook.
6. Contractor shall adequately support drilled shaft excavation in order to properly construct drilled shafts. Due to high squeeze potential of the clay soils, the use of temporary casing at Drilled shafts 3 & 4 will be required to elevation ±549.0. Contractor shall perform squeeze analysis to determine actual casing limits. Temporary casing may be pulled or left in place, as determined by the Contractor, at no cost to the Department.

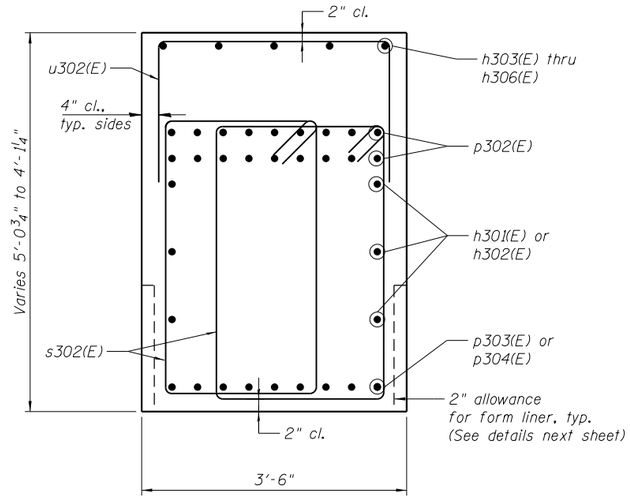

SECTION A-A

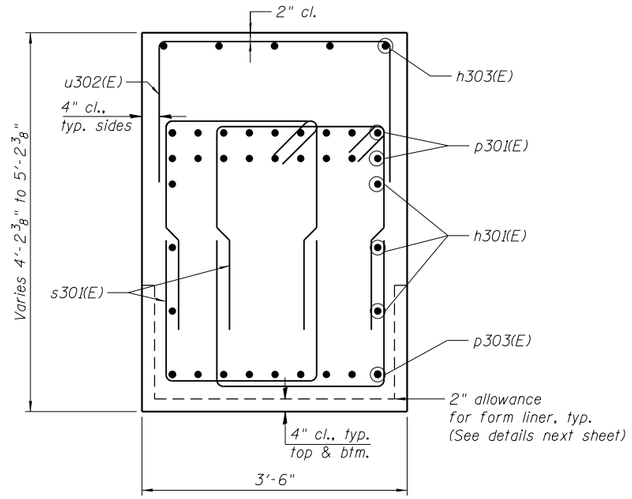

SECTION B-B

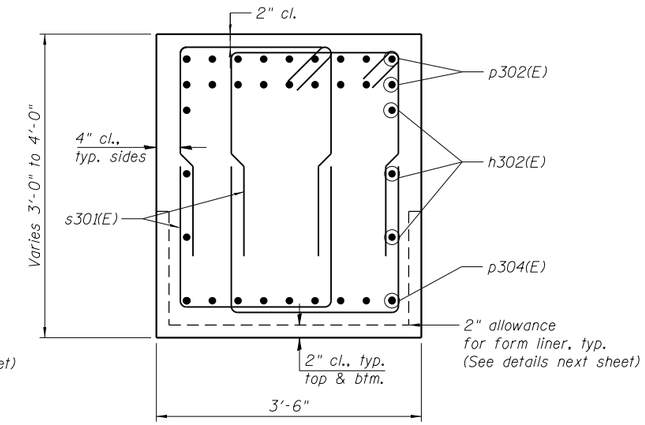

SECTION C-C

A & B DIMENSIONS

Bar	A	B
s301(E)	2'-7"	2'-3"
s303(E)	2'-4"	2'-10"
s304(E)	6'-6"	4'-8"
u301(E)	3'-9"	3'-2"
u302(E)	1'-4"	3'-2"
u303(E)	3'-9"	4'-8"

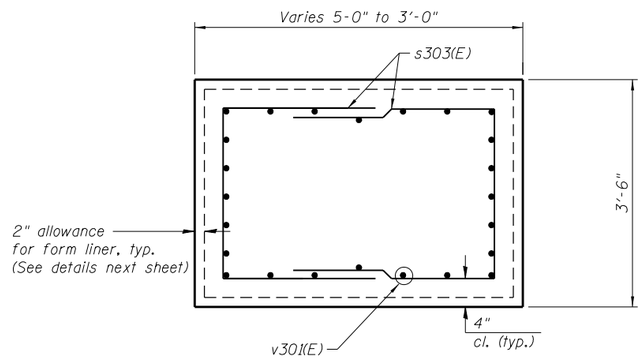

SECTION D-D

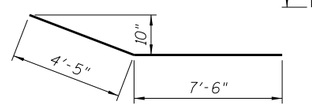

BAR p305(E)

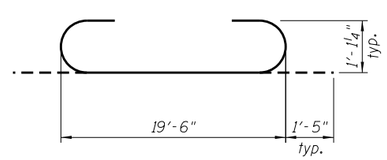

BAR v301(E)

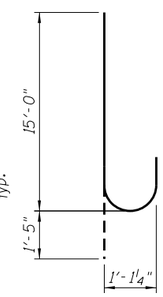

BAR v302(E)

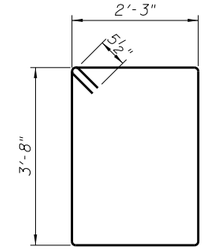

BAR s302(E)

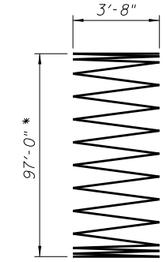

BAR sp301

BILL OF MATERIAL

Bar	No.	Size	Length	Shape
h301(E)	6	#5	25'-7"	
h302(E)	6	#5	37'-2"	
h303(E)	5	#5	6'-2"	
h304(E)	5	#5	25'-7"	
h305(E)	5	#5	8'-3"	
h306(E)	5	#5	22'-3"	
h307(E)	30	#7	31'-10"	
h308(E)	30	#7	29'-9"	
p301(E)	18	#9	25'-7"	
p302(E)	18	#9	37'-2"	
p303(E)	9	#8	21'-1"	
p304(E)	9	#8	32'-8"	
p305(E)	18	#8	11'-11"	
p306(E)	24	#10	31'-10"	
p307(E)	24	#10	29'-9"	
s301(E)	88	#5	7'-5"	
s302(E)	240	#5	12'-9"	
s303(E)	130	#5	7'-6"	
s304(E)	182	#6	17'-8"	
* sp301	4	#6	97'-0"	
u301(E)	12	#5	10'-8"	
u302(E)	66	#5	5'-10"	
u303(E)	34	#5	12'-2"	
v301(E)	120	#10	22'-4"	
v302(E)	80	#10	16'-5"	
v303	160	#10	43'-11"	
v304	80	#10	32'-6"	
Structure Excavation			Cu. Yd.	67
Concrete Structures			Cu. Yd.	179.3
Reinforcement Bars			Pound	55,060
Reinforcement Bars, Epoxy Coated			Pound	44,430
Permanent Casing			Foot	190
Drilled Shaft in Soil			Cu. Yd.	221.1
Drilled Shaft in Rock			Cu. Yd.	5.6
Concrete Sealer			Sq. Ft.	3571
Crosshole Sonic Logging Access Ducts			Foot	388
Crosshole Sonic Logging Testing			Each	1

* Length is height of spiral

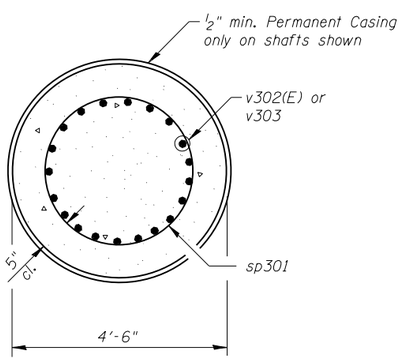

SECTION E-E

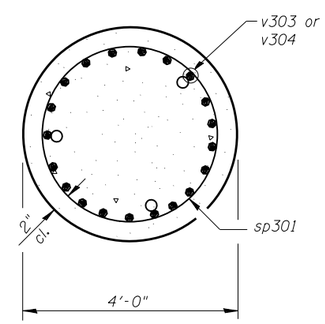

SECTION G-G

(All Drilled Shafts)

Notes:

1. Bars noted thus, 14x2-#9 indicated 14 lines of bars with 2 lengths of bars per line.
2. Bars equally spaced, unless otherwise noted.
3. Apply concrete sealer to all exposed concrete surfaces of the pier.
4. All edges shall have standard 3/4" chamfer.
5. The quantities and reinforcement detailing are based on the footing elevation and estimated top of rock elevation shown and may change depending on the actual top of rock encountered at each shaft. It is the Contractor's responsibility to make necessary, approved adjustments.
6. When Contractor's means and methods include initiating drilling for shafts at elevations higher than the final top of shaft elevation (e.g. Existing Ground Elevation), the costs for drilling, disposing of excavation, providing casing and backfilling of drilled shafts or other appurtenant work activities in the areas between the elevation where drilling is initiated and the proposed elevation of the top of shaft shall not be paid for separated but shall be included in the cost of Drilled Shaft in Soil.
7. Perform Crosshole Sonic Logging (CSL) testing on either Drilled Shafts 3 or 4.

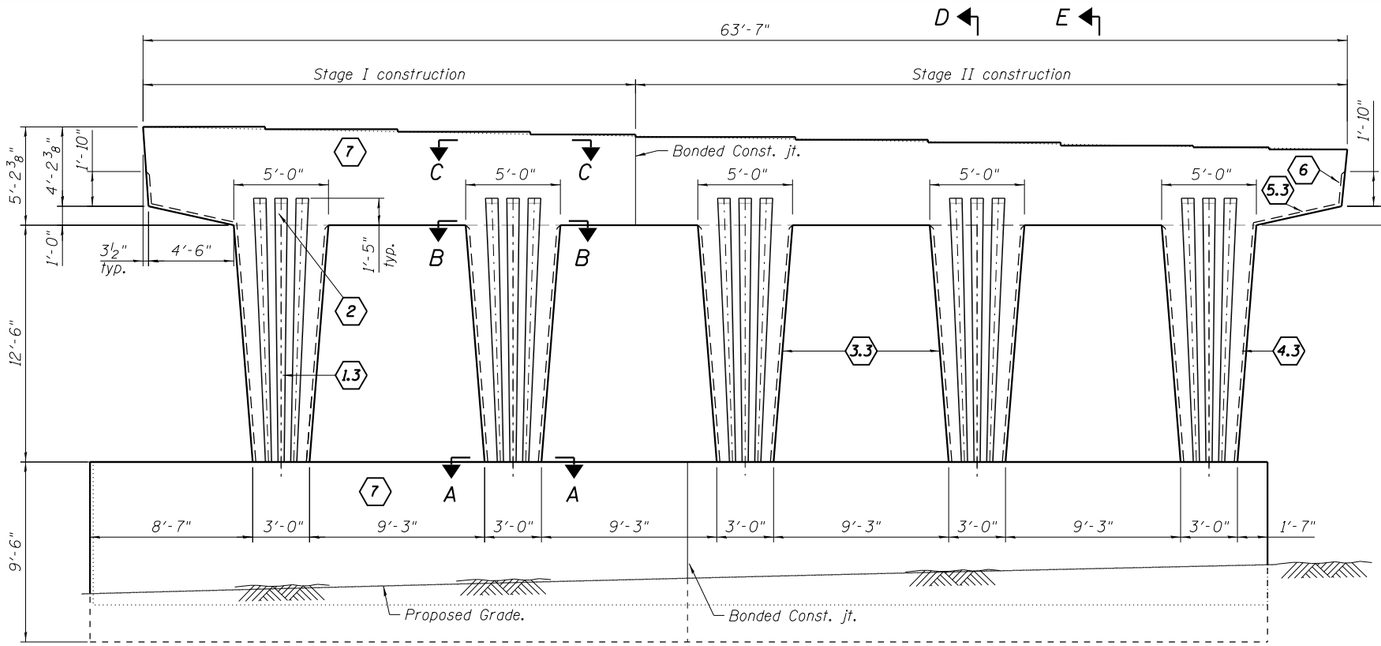

PIER ELEVATION
(Looking East)
(Looking West - Similar, Opposite hand)

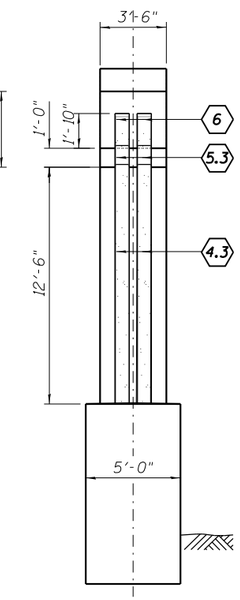

PIER END VIEW
(Looking South)
(Looking North)

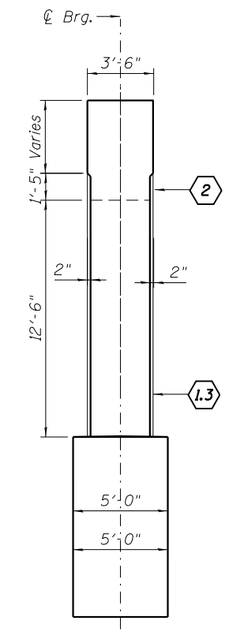

SECTION D-D

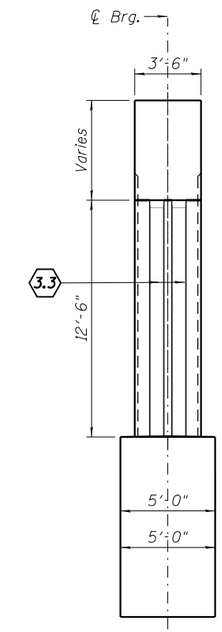

SECTION E-E

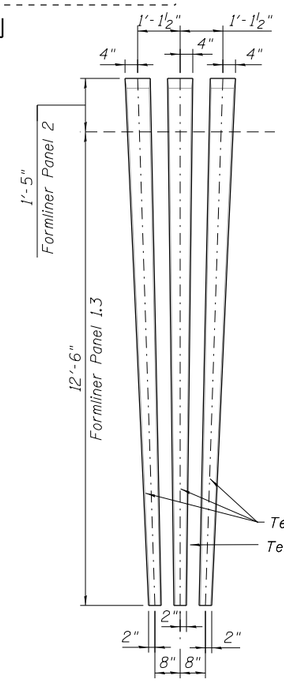

FORM LINER
PANEL 1.3 & 2

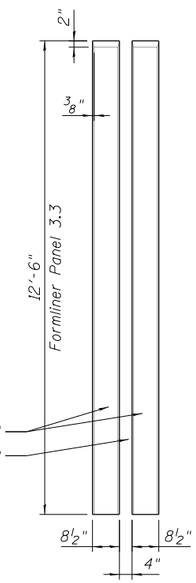

FORM LINER
PANEL 3.3

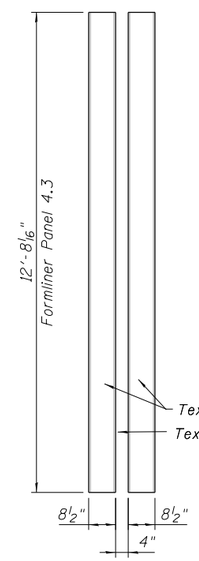

FORM LINER
PANEL 4.3

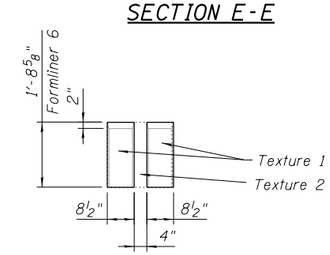

FORM LINER
PANEL 6

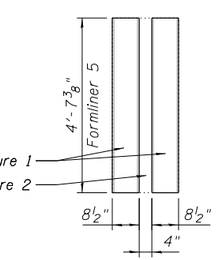

FORM LINER
PANEL 5.3

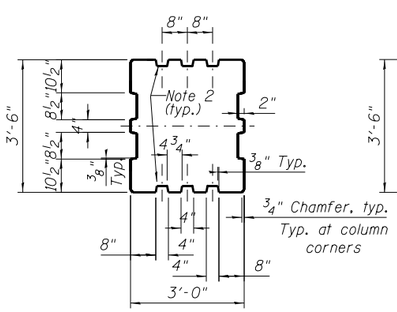

SECTION A-A
At Bottom of Column

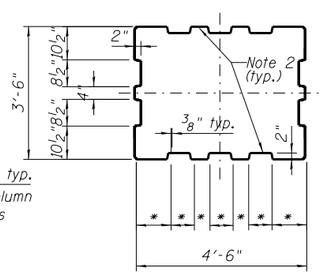

SECTION B-B
At Top of Column

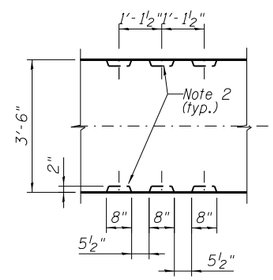

SECTION C-C
In Cap

* Dimensions of formliner at top of column (panel 1) to match dimensions of formliner at bottom of pier cap (panel 2).

NOTES:

1. Surface indicated as (7) represents all surface except formliner and shall have smooth rubbed finish. Cost included with pay item Rubbed Finish.
2. Tapered fluting - dimensions vary, see elevation profile.
3. Formliner panel (2) is continuation of panel (1). Keep adjacent formliners aligned.
4. Hand clean and smooth the surface of the construction joint between the pier and cap.
5. Texture 1: Light Sandblast, 1/16" depth, as selected from samples provided by the Contractor.
   Texture 2: Smooth
6. The three flutes at Form liner panel 1.1, 1.2 and 1.3 have same geometry but are different at the top and bottom.
7. For pier dimensions see structural drawings S1-38 to S1-45

LEGEND

(1) (2) (3) (4) (5) (6) — Textured Form Liner

(7) — Rubbed finish

BILL OF MATERIAL

Item	Unit	Total
Form Liner Textured Surface	Sq. Ft.	562
Rubbed Finish	Sq. Ft.	2,322

AECOM

USER NAME = floresg	DESIGNED - AV	REVISED
	CHECKED - SD	REVISED
PLOT SCALE = N.T.S.	DRAWN - GF	REVISED
PLOT DATE = 6/28/2017	CHECKED - SD	REVISED

STATE OF ILLINOIS
DEPARTMENT OF TRANSPORTATION

PIER 3 DETAILS – 2
STRUCTURE NO. 016-1704
SHEET NO. S1-46 OF S1-52 SHEETS

F.A.I. RTE.	SECTION	COUNTY	TOTAL SHEETS	SHEET NO.
90/94/290	2014-001 R&B	COOK	696	267

CONTRACT NO. 60X75
ILLINOIS FED. AID PROJECT

0161704-60X75-S46-Pier3 Details.dgn

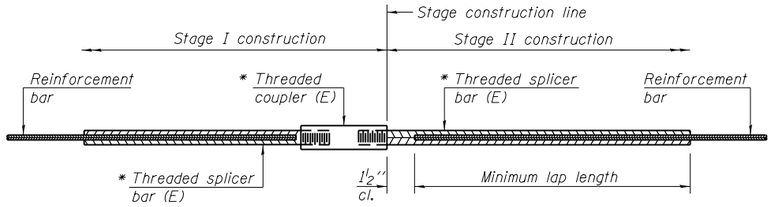

STANDARD BAR SPLICER ASSEMBLY

Threaded splicer bar length = min. lap length + 1½" + thread length

* Epoxy not required on Bar Splicer Assembly components used in conjunction with black bars.

Location	Bar size	No. assemblies required	Minimum lap length
Deck	#5	1747	3'-6"
W. Approach Slab	#5	86	3'-4"
W. Approach Slab	#8	60	5'-4"
W. Abutment	#9	34	7'-1"
W. Abutment	#5	13	3'-7"
Pier 1	#5	6	3'-7"
Pier 1	#7	20	5'-0"
Pier 1	#8	9	5'-1"
Pier 1	#10	42	11'-6"
Pier 2	#5	6	3'-7"
Pier 2	#7	20	5'-0"
Pier 2	#8	8	5'-1"
Pier 2	#10	36	11'-6"
Pier 3	#5	6	3'-7"
Pier 3	#7	30	5'-0"
Pier 3	#8	9	5'-1"
Pier 3	#9	18	10'-4"

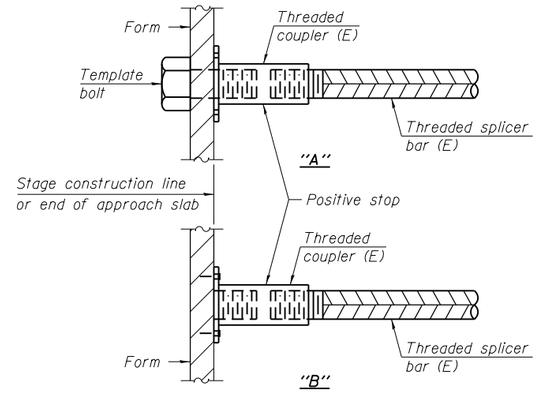

INSTALLATION AND SETTING METHODS

"A" : Set bar splicer assembly by means of a template bolt.
"B" : Set bar splicer assembly by nailing to wood forms or cementing to steel forms.
(E) : Indicates epoxy coating.

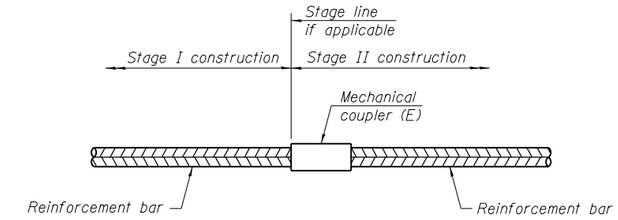

STANDARD MECHANICAL SPLICER

Location	Bar size	No. assemblies required

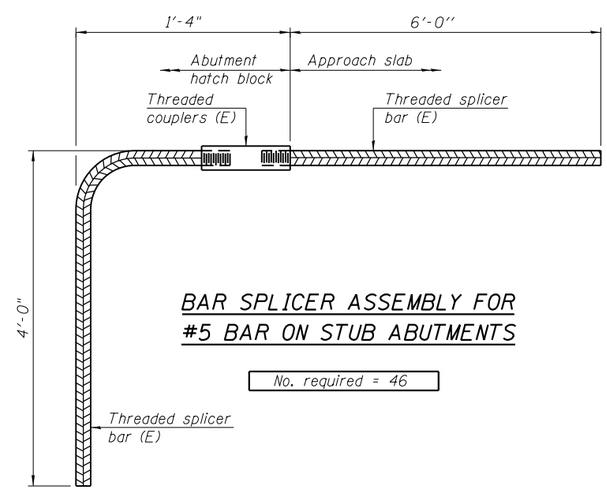

BAR SPLICER ASSEMBLY FOR #5 BAR ON STUB ABUTMENTS

No. required = 46

NOTES

Splicer bars shall be deformed with threaded ends and have a minimum 60 ksi yield strength.

All reinforcement shall be lapped and tied to the splicer bars.

Bar splicer assemblies shall be epoxy coated according to the requirements for reinforcement bars. See Section 508 of the Standard Specifications.

See approved list of bar splicer assemblies and mechanical splicers for alternatives.

BSD-1 6-8-15

0161704-60X75-S47-BarSplice.dgn

AECOM	USER NAME = floresg	DESIGNED - JXH	REVISED
		CHECKED - ATB	REVISED
	PLOT SCALE = N.T.S.	DRAWN - JXH	REVISED
	PLOT DATE = 6/28/2017	CHECKED - ATB	REVISED

STATE OF ILLINOIS
DEPARTMENT OF TRANSPORTATION

BAR SPLICER AND MECHANIC SPLICER DETAILS
STRUCTURE NO. 016-1704
SHEET NO. S1-47 OF S1-52 SHEETS

F.A.I. RTE.	SECTION	COUNTY	TOTAL SHEETS	SHEET NO.
90/94/290	2014-001 R&B	COOK	696	268
		CONTRACT NO. 60X75		
	ILLINOIS	FED. AID PROJECT		

BORING LOG 1704-B-01

Wang Engineering
wangeng@wangeng.com
1145 N Main Street
Lombard, IL 60148
Telephone: 630 953-9928
Fax: 630 953-9938

WEI Job No.: 1100-04-01

Client: **AECOM**
Project: **Circle Interchange Reconstruction**
Location: **Section 17, T39N, R14E of 3rd PM**

Datum: NAVD 88
Elevation: 588.98 ft
North: 1897913.67 ft
East: 1171434.80 ft
Station: 5155+31.36
Offset: 19.5036 RT

Elevation (ft)	SOIL AND ROCK DESCRIPTION	Depth (ft)	Sample Type / Recovery	Sample No.	SPT Values (blw/6 in)	Qu (tsf)	Moisture Content (%)
588.0	4-inch thick ASPHALT over 8-inch thick CONCRETE						
587.6	--PAVEMENT--						
	6-inch thick CRUSHED STONE --BASE COURSE--			1	3 6 9	> 4.50 P	27
	Very stiff to hard, gray SILTY CLAY LOAM, trace to little gravel, glass, cinders and brick --FILL--	5		2	8 7 5	2.87 B	15
				3	4 7 9	6.64 B	16
		10		4	3 4 4	3.12 B	18
578.5	Very soft to soft, gray CLAY to SILTY CLAY LOAM, trace gravel --2" coarse SAND--->			5	2 1 1	0.25 B	27
	--L_L(%)=31, P_I(%)=17-- --%Gravel=4.1-- --%Sand=20.5-- --%Silt=49.6-- --%Clay=25.9-- --A-6(9)--	15		6	0 0 0	0.16 B	25
				7	0 0 0	0.16 B	23
		20		8	2 2 2	0.49 B	18
				9	0 0 0	0.33 B	26
		25		10	0 0 0	0.16 B	27

Elevation (ft)	SOIL AND ROCK DESCRIPTION	Depth (ft)	Sample Type / Recovery	Sample No.	SPT Values (blw/6 in)	Qu (tsf)	Moisture Content (%)
				11	0 1 1	0.08 B	27
		30		12	0 0 0	0.16 B	26
	--L_L(%)=31, P_I(%)=18-- --%Gravel=4.1-- --%Sand=15.7-- --%Silt=52.9-- --%Clay=27.3-- --A-6(9)--	35		13	0 0 1	0.25 B	27
		40		14	0 0 2	0.25 B	24
		45		15	0 0 2	0.25 B	29
542.2	Very stiff, gray SILTY CLAY, trace gravel						
		50		16	2 4 8	2.00 N/6	

GENERAL NOTES

Begin Drilling **10-09-2013** Complete Drilling **10-09-2013**
Drilling Contractor **Wang Testing Services** Drill Rig **D-50 TMR**
Driller **R&R** Logger **D. Kolpacki** Checked by **C. Marin**
Drilling Method **3.25" HSA to 10', mud rotary thereafter, boring backfilled upon completion**

WATER LEVEL DATA

While Drilling ▽ **11.50 ft**
At Completion of Drilling ▼ **96.75 ft**
Time After Drilling **NA**
Depth to Water ▼ **NA**

The stratification lines represent the approximate boundary between soil types; the actual transition may be gradual.

WANGENGINC 11000401.GPJ WANGENG.GDT 4/4/14

BORING LOG 1704-B-01
Wang Engineering
wangeng@wangeng.com
1145 N Main Street
Lombard, IL 60148
Telephone: 630 953-9928
Fax: 630 953-9938
WEI Job No.: 1100-04-01
Client: AECOM
Project: Circle Interchange Reconstruction
Location: Section 17, T39N, R14E of 3rd PM
Datum: NAVD 88
Elevation: 588.98 ft
North: 1897913.67 ft
East: 1171434.80 ft
Station: 5155+31.36
Offset: 19.5036 RT

Elevation (ft)	SOIL AND ROCK DESCRIPTION	Depth (ft)	Sample Type / Recovery	Sample No.	SPT Values (blw/6 in)	Qu (tsf)	Moisture Content (%)
		55		17	10 14 18	3.61 B	14
532.2	Very stiff, gray CLAY to SILTY CLAY, trace gravel						
		60		18	5 9 15	3.69 B	22
	--HARD DRILLING-- --Possible Cobbles--						
	--L_L(%)=34, P_I(%)=19-- --%Gravel=1.4-- --%Sand=5.0-- --%Silt=50.7-- --%Clay=42.9-- --A-6(14)--	65		19	6 7 10	2.21 B	25
520.0	Medium dense, gray SILTY LOAM, trace gravel	70		20	5 5 5	2.75 P	17
517.2	Hard, gray SILTY CLAY to SILTY CLAY LOAM, trace gravel						
	--1" SILT--	75		21	4 9 16	7.05 B	15

Elevation (ft)	SOIL AND ROCK DESCRIPTION	Depth (ft)	Sample Type / Recovery	Sample No.	SPT Values (blw/6 in)	Qu (tsf)	Moisture Content (%)
	--L_L(%)=25, P_I(%)=16-- --%Gravel=1.9-- --%Sand=9.9-- --%Silt=66.6-- --%Clay=21.6-- --A-4(6)-- --HARD DRILLING-- --Possible Cobbles--	80		22	12 19 25	6.07 S	16
504.7	Dense, gray SILTY LOAM, trace gravel	85		23	16 18 21	5.08 B	20
502.2	--HARD DRILLING-- Hard, gray SILTY CLAY LOAM, trace gravel						
		90		24	19 50/6"	6.23 S	11
497.2	Very dense, gray SILTY LOAM, trace gravel						
		95		25	35 50/3"	NP	15
492.2	Very dense, gray SILT, trace CLAY lamination --Saturated-- --%Gravel=0.0-- --%Sand=0.7-- --%Silt=87.7--	100		26	23 33 47	NP	17

GENERAL NOTES

Begin Drilling **10-09-2013** Complete Drilling **10-09-2013**
Drilling Contractor **Wang Testing Services** Drill Rig **D-50 TMR**
Driller **R&R** Logger **D. Kolpacki** Checked by **C. Marin**
Drilling Method **3.25" HSA to 10', mud rotary thereafter, boring backfilled upon completion**

WATER LEVEL DATA

While Drilling ▽ **11.50 ft**
At Completion of Drilling ▼ **96.75 ft**
Time After Drilling **NA**
Depth to Water ▼ **NA**

The stratification lines represent the approximate boundary between soil types; the actual transition may be gradual.

WANGENGINC 11000401.GPJ WANGENG.GDT 4/4/14

BORING LOG 1704-B-01
Wang Engineering
wangeng@wangeng.com
1145 N Main Street
Lombard, IL 60148
Telephone: 630 953-9928
Fax: 630 953-9938
WEI Job No.: 1100-04-01
Client: AECOM
Project: Circle Interchange Reconstruction
Location: Section 17, T39N, R14E of 3rd PM
Datum: NAVD 88
Elevation: 588.98 ft
North: 1897913.67 ft
East: 1171434.80 ft
Station: 5155+31.36
Offset: 19.5036 RT

Elevation (ft)	SOIL AND ROCK DESCRIPTION	Depth (ft)	Sample Type / Recovery	Sample No.	SPT Values (blw/6 in)	Qu (tsf)	Moisture Content (%)
	--%Clay=11.5-- --A-4(0)--						
488.0	--ROLLER BIT REFUSAL-- --Possible BEDROCK--						
	Boring terminated at 101.00 ft	105					
		110					
		115					
		120					
		125					

GENERAL NOTES

Begin Drilling **10-09-2013** Complete Drilling **10-09-2013**
Drilling Contractor **Wang Testing Services** Drill Rig **D-50 TMR**
Driller **R&R** Logger **D. Kolpacki** Checked by **C. Marin**
Drilling Method **3.25" HSA to 10', mud rotary thereafter, boring backfilled upon completion**

WATER LEVEL DATA

While Drilling ▽ **11.50 ft**
At Completion of Drilling ▼ **96.75 ft**
Time After Drilling **NA**
Depth to Water ▼ **NA**

The stratification lines represent the approximate boundary between soil types; the actual transition may be gradual.

WANGENGINC 11000401.GPJ WANGENG.GDT 4/4/14

0161704-60X75-S48-Boring.dgn

AECOM

USER NAME = floresg	DESIGNED - JXH	REVISED	
	CHECKED - DD	REVISED	
PLOT SCALE = N.T.S.	DRAWN - GF	REVISED	
PLOT DATE = 6/28/2017	CHECKED - JXH	REVISED	

STATE OF ILLINOIS
DEPARTMENT OF TRANSPORTATION

SOIL BORING LOGS - 1
STRUCTURE NO. 016-1704

SHEET NO. S1-48 OF S1-52 SHEETS

F.A.I. RTE.	SECTION	COUNTY	TOTAL SHEETS	SHEET NO.
90/94/290	2014-001 R&B	COOK	696	269

CONTRACT NO. 60X75

ILLINOIS FED. AID PROJECT

Wang Engineering
wangeng@wangeng.com
1145 N Main Street
Lombard, IL 60148
Telephone: 630 953-9928
Fax: 630 953-9938

BORING LOG 1704-B-02

WEI Job No.: 1100-04-01

Client: **AECOM**
Project: **Circle Interchange Reconstruction**
Location: **Section 17, T39N, R14E of 3rd PM**

Datum: NAVD 88
Elevation: 575.24 ft
North: 1897908.23 ft
East: 1171582.03 ft
Station: 5156+77.85
Offset: 32.3584 RT

Elevation (ft)	SOIL AND ROCK DESCRIPTION	Depth (ft)	Sample Type	Recovery	Sample No.	SPT Values (blw/6 in)	Qu (tsf)	Moisture Content (%)
574.2	12-inch thick ASPHALT --PAVEMENT--							
	Medium dense, brown SANDY GRAVEL --FILL--				1	17 13 13	NP	5
572.2	Hard, dark gray CLAY LOAM, trace gravel, brick fragments, and cinders --FILL--	5			2	5 7 8	5.17 B	16
569.7	Medium stiff to stiff, gray SILTY CLAY, trace gravel				3	3 4 4	1.64 B	20
567.2	Soft to medium stiff, gray CLAY to SILTY CLAY, trace gravel	10			4	2 2 3	0.49 B	22
					5	0 2 2	0.57 B	22
		15			6	0 2 2	0.66 B	25
					7	0 2 2	0.49 B	25
		20			8	0 1 2	0.33 B	26
					9	0 0 2	0.33 B	26
		25			10	0 1 3	0.41 B	25
541.0	Hard, gray SILTY CLAY, trace gravel	30			11	3 5 6	0.66 B	24
					12	1 2 2	0.33 B	26
		35			13	2 3 3	1.00 N/6	
		40			14	6 9 16	4.35 B	20
		45			15	7 14 26	5.41 B	16
		50			16	9 17 18	4.84 B	22

GENERAL NOTES

Begin Drilling: **10-17-2013** Complete Drilling: **10-17-2013**
Drilling Contractor: **Wang Testing Services** Drill Rig: **D-50 TMR**
Driller: **R&N** Logger: **D. Kolpacki** Checked by: **C. Marin**
Drilling Method: **3.25" HSA to 10', mud rotary thereafter, boring backfilled upon completion**

WATER LEVEL DATA

While Drilling: **52.50 ft**
At Completion of Drilling: **82.00 ft**
Time After Drilling: **NA**
Depth to Water: **NA**

The stratification lines represent the approximate boundary between soil types; the actual transition may be gradual.

WANGENGINC 11000401.GPJ WANGENG.GDT 4/4/14

Wang Engineering
wangeng@wangeng.com
1145 N Main Street
Lombard, IL 60148
Telephone: 630 953-9928
Fax: 630 953-9938

BORING LOG 1704-B-02

WEI Job No.: 1100-04-01

Client: **AECOM**
Project: **Circle Interchange Reconstruction**
Location: **Section 17, T39N, R14E of 3rd PM**

Datum: NAVD 88
Elevation: 575.24 ft
North: 1897908.23 ft
East: 1171582.03 ft
Station: 5156+77.85
Offset: 32.3584 RT

Elevation (ft)	SOIL AND ROCK DESCRIPTION	Depth (ft)	Sample Type	Recovery	Sample No.	SPT Values (blw/6 in)	Qu (tsf)	Moisture Content (%)
523.5	Medium dense, gray, fine SAND --Saturated--	55			17	1 3 7	NP	23
518.5	Hard, gray SILTY CLAY to SILTY CLAY LOAM, trace gravel	60			18	12 20 30	6.97 S	14
		65			19	11 16 21	7.13 B	17
508.5	Very dense, gray SILT --Saturated--	70			20	15 19 43	NP	23
503.5	Hard, gray SILTY CLAY LOAM, trace gravel	75			21	42 50/5	> 4.50 P	9
498.5	Dense to very dense, gray SILT to SILTY LOAM --Saturated--	80			22	21 37 48	NP	22
		85			23	17 20 23	NP	21
488.5	Hard, gray SILTY CLAY, trace gravel	90			24	50/4	> 4.50 P	20
482.2	--ROLLER BIT REFUSAL-- --Possible BEDROCK-- Boring terminated at 93.00 ft	95						
		100						

GENERAL NOTES

Begin Drilling: **10-17-2013** Complete Drilling: **10-17-2013**
Drilling Contractor: **Wang Testing Services** Drill Rig: **D-50 TMR**
Driller: **R&N** Logger: **D. Kolpacki** Checked by: **C. Marin**
Drilling Method: **3.25" HSA to 10', mud rotary thereafter, boring backfilled upon completion**

WATER LEVEL DATA

While Drilling: **52.50 ft**
At Completion of Drilling: **82.00 ft**
Time After Drilling: **NA**
Depth to Water: **NA**

The stratification lines represent the approximate boundary between soil types; the actual transition may be gradual.

WANGENGINC 11000401.GPJ WANGENG.GDT 4/4/14

Wang Engineering
wangeng@wangeng.com
1145 N Main Street
Lombard, IL 60148
Telephone: 630 953-9928
Fax: 630 953-9938

BORING LOG 1704-B-03

WEI Job No.: 1100-04-01

Client: **AECOM**
Project: **Circle Interchange Reconstruction**
Location: **Section 17, T39N, R14E of 3rd PM**

Datum: NAVD 88
Elevation: 575.52 ft
North: 1897910.46 ft
East: 1171681.80 ft
Station: 5157+77.59
Offset: 35.5253 RT

Elevation (ft)	SOIL AND ROCK DESCRIPTION	Depth (ft)	Sample Type	Recovery	Sample No.	SPT Values (blw/6 in)	Qu (tsf)	Moisture Content (%)
574.5	12-inch thick ASPHALT --SHOULDER PAVEMENT--							
	Dense, gray and white LOAM, trace gravel --FILL--				1	17 18 16	NP	7
572.5	Hard, dark brown SILTY CLAY LOAM, trace to little gravel --FILL--	5			2	5 6 8	6.56 B	17
570.0	Loose, black to brown SANDY LOAM, trace gravel --FILL--				3	3 4 4	NP	21
566.5	Stiff, brown and gray SILTY CLAY, trace gravel	10			4	2 3 4	1.31 B	19
565.0	Medium stiff, gray CLAY to SILTY CLAY, trace gravel				5	2 2 2	0.67 N/6	23
		15			6	1 2 2	0.67 N/6	21
					7	1 1 2	0.90 B	22
557.5	Medium stiff, to stiff, gray SILTY CLAY LOAM, trace gravel	20			8	3 4 4	1.15 B	19
					9	2 3 3	0.90 B	19
		25			10	1 2 3	0.75 P	20
550.0	Soft, gray CLAY to SILTY CLAY, trace gravel				11	2 1 2	0.49 B	25
		30			12	2 2 3	0.49 B	28
543.8	Hard, gray SILTY CLAY LOAM, trace gravel --1" SILT; moist--->	35			13	5 3 3	4.92 B	21
		40			14	8 9 12	4.02 B	17
		45			15	10 12 14	4.02 B	18
		50			16	19 34 22	6.01 B	10

GENERAL NOTES

Begin Drilling: **10-21-2013** Complete Drilling: **10-21-2013**
Drilling Contractor: **Wang Testing Services** Drill Rig: **CME-55 TMR**
Driller: **R&J** Logger: **A. Happel** Checked by: **C. Marin**
Drilling Method: **2.25" HSA to 10', mud rotary thereafter, boring backfilled upon completion**

WATER LEVEL DATA

While Drilling: **54.00 ft**
At Completion of Drilling: **NA**
Time After Drilling: **NA**
Depth to Water: **NA**

The stratification lines represent the approximate boundary between soil types; the actual transition may be gradual.

WANGENGINC 11000401.GPJ WANGENG.GDT 4/4/14

0161704-60X75-S49-Boring.dgn

AECOM	USER NAME = floresg	DESIGNED - JXH	REVISED
		CHECKED - DD	REVISED
	PLOT SCALE = N.T.S.	DRAWN - GF	REVISED
	PLOT DATE = 6/28/2017	CHECKED - JXH	REVISED

STATE OF ILLINOIS
DEPARTMENT OF TRANSPORTATION

SOIL BORING LOGS - 2
STRUCTURE NO. 016-1704

SHEET NO. S1-49 OF S1-52 SHEETS

F.A.I. RTE.	SECTION	COUNTY	TOTAL SHEETS	SHEET NO.
90/94/290	2014-001 R&B	COOK	696	270
		CONTRACT NO. 60X75		
		ILLINOIS FED. AID PROJECT		

BORING LOG 1704-B-03

Wang Engineering
wangeng@wangeng.com
1145 N Main Street
Lombard, IL 60148
Telephone: 630 953-9928
Fax: 630 953-9938

WEI Job No.: 1100-04-01

Client: **AECOM**
Project: **Circle Interchange Reconstruction**
Location: **Section 17, T39N, R14E of 3rd PM**

Datum: NAVD 88
Elevation: 575.52 ft
North: 1897910.46 ft
East: 1171681.80 ft
Station: 5157+77.59
Offset: 35.5253 RT

Elevation (ft)	SOIL AND ROCK DESCRIPTION	Depth (ft)	Sample Type / Recovery	Sample No.	SPT Values (blw/6 in)	Qu (tsf)	Moisture Content (%)
521.5	Medium dense, gray SILTY LOAM, trace gravel --Wet--	55		17	4 4 6	NP	23
518.8	Very stiff to hard, gray SILTY CLAY LOAM, trace gravel	60		18	13 12 14	4.50 P	16
		65		19	11 15 23	2.87 B	22
508.8	Very dense, gray SILTY LOAM to SILTY CLAY LOAM, trace gravel	70		20	24 33 37	4.51 S	10
		75		21	15 44 50/3	NP	15
		80		22	28 50/5	3.85 S	9
		85		23	32 35 38	4.10 B	18
488.8	Very stiff, gray SILTY CLAY LOAM, trace gravel	90		24	16 13 18	2.96 B	18
483.8	Very dense, gray GRAVELLY SAND --WEATHERED BEDROCK--	95		25	50/4	NP	16
	--HARD DRILLING-- --Possible Cobbles--	55					
480.0	--ROLLER BIT REFUSAL-- Boring terminated at 95.50 ft	100					

GENERAL NOTES

Begin Drilling: **10-21-2013** Complete Drilling: **10-21-2013**
Drilling Contractor: **Wang Testing Services** Drill Rig: **CME-55 TMR**
Driller: **R&J** Logger: **A. Happel** Checked by: **C. Marin**
Drilling Method: **2.25" HSA to 10', mud rotary thereafter, boring backfilled upon completion**

WATER LEVEL DATA

While Drilling: **54.00 ft**
At Completion of Drilling: **NA**
Time After Drilling: **NA**
Depth to Water: **NA**

The stratification lines represent the approximate boundary between soil types; the actual transition may be gradual.

WANGENGINC 11000401.GPJ WANGENG.GDT 4/4/14

BORING LOG 1704-B-04

Wang Engineering
wangeng@wangeng.com
1145 N Main Street
Lombard, IL 60148
Telephone: 630 953-9928
Fax: 630 953-9938

WEI Job No.: 1100-04-01

Client: **AECOM**
Project: **Circle Interchange Reconstruction**
Location: **Section 17, T39N, R14E of 3rd PM**

Datum: NAVD 88
Elevation: 584.72 ft
North: 1897903.29 ft
East: 1171842.81 ft
Station: 5159+38.86
Offset: 50.4076 RT

Elevation (ft)	SOIL AND ROCK DESCRIPTION	Depth (ft)	Sample Type	Sample No.	SPT Values (blw/6 in)	Qu (tsf)	Moisture Content (%)
583.2	Medium dense, gray GRAVELLY LOAM, trace brick fragments --FILL--			1	14 10 6	NP	6
581.7	Medium dense, brown and black SILTY LOAM. trace plants --FILL--						
	Loose, gray GRAVEL --FILL--	5		2	7 4 3	NP	6
579.2	Soft to medium stiff gray SILTY CLAY LOAM, trace gravel --L_L(%)=31, P_I(%)=16-- --%Gravel=2.9-- --%Sand=19.5-- --%Silt=49.6-- --%Clay=28.0-- --A-6(10)--			3	2 1 1	0.57 B	24
		10		4	0 0 0	0.33 B	24
574.2	Very soft to medium stiff, gray CLAY to SILTY CLAY, trace gravel			5	0 0 0	0.25 B	29
		15		6	0 0 0	0.16 B	20
				7	0 0 0	< 0.25 P	27
		20		8	0 0 0	< 0.25 P	32
				9	0 0 0	< 0.25 P	32
		25		10	0 0 0	< 0.25 P	24
		30		11	0 0 0	< 0.25 P	37
				12	0 0 0	< 0.25 P	36
		35		13	0 1 3	0.66 B	23
	--L_L(%)=37, P_I(%)=18-- --%Gravel=3.1-- --%Sand=11.1-- --%Silt=49.9-- --%Clay=35.9-- --A-6(16)--	40		14	0 2 4	0.90 B	24
543.0	Very stiff to hard, gray SILTY CLAY, trace gravel						
	--Coarse gravel and cobbles-->	45		15	4 5 7	2.00 N/6	
		50		16	12 13 18	5.17 N/6	13

GENERAL NOTES

Begin Drilling: **10-02-2013** Complete Drilling: **10-03-2013**
Drilling Contractor: **Wang Testing Services** Drill Rig: **D-50 TMR**
Driller: **R&R** Logger: **A. Tomaras** Checked by: **C. Marin**
Drilling Method: **3.25" HSA, boring backfilled upon completion**

WATER LEVEL DATA

While Drilling: **10.50 ft**
At Completion of Drilling: **NA**
Time After Drilling: **NA**
Depth to Water: **NA**

The stratification lines represent the approximate boundary between soil types; the actual transition may be gradual.

WANGENGINC 11000401.GPJ WANGENG.GDT 4/4/14

BORING LOG 1704-B-04

Wang Engineering
wangeng@wangeng.com
1145 N Main Street
Lombard, IL 60148
Telephone: 630 953-9928
Fax: 630 953-9938

WEI Job No.: 1100-04-01

Client: **AECOM**
Project: **Circle Interchange Reconstruction**
Location: **Section 17, T39N, R14E of 3rd PM**

Datum: NAVD 88
Elevation: 584.72 ft
North: 1897903.29 ft
East: 1171842.81 ft
Station: 5159+38.86
Offset: 50.4076 RT

Elevation (ft)	SOIL AND ROCK DESCRIPTION	Depth (ft)	Sample Type	Sample No.	SPT Values (blw/6 in)	Qu (tsf)	Moisture Content (%)
		55		17	7 6 10	2.79 B	20
528.0	Very dense, gray SILT						
		60		18	16 20 25	NA	
		65		19	26 34 43	NP	15
518.0	Very dense, gray SILTY LOAM to SILTY CLAY LOAM, trace gravel --L_L(%)=20, P_I(%)=13-- --%Gravel=8.3-- --%Sand=24.4-- --%Silt=57.2-- %Clay=10.1 --A-4(2)--	70		20	22 22 28	6.56 S	12
		75		21	11 30 50/5	4.00 P	8
497.2	Very dense, gray SANDY GRAVEL --Saturated--						
487.7	Very dense, gray GRAVELLY SILTY LOAM, some cobbles and boulders --AUGER REFUSAL--	100					
		80		22	21 50 30/2	> 4.50 P	9
		85		23	33 70/3	8.94 B	20
		90		24	39 33 31	NP	10
		95		25	45 37 27	NP	7
				26	39 60/2	NP	11

GENERAL NOTES

Begin Drilling: **10-02-2013** Complete Drilling: **10-03-2013**
Drilling Contractor: **Wang Testing Services** Drill Rig: **D-50 TMR**
Driller: **R&R** Logger: **A. Tomaras** Checked by: **C. Marin**
Drilling Method: **3.25" HSA, boring backfilled upon completion**

WATER LEVEL DATA

While Drilling: **10.50 ft**
At Completion of Drilling: **NA**
Time After Drilling: **NA**
Depth to Water: **NA**

The stratification lines represent the approximate boundary between soil types; the actual transition may be gradual.

WANGENGINC 11000401.GPJ WANGENG.GDT 4/4/14

0161704-60X75-S50-Boring.dgn

AECOM	USER NAME = floresg	DESIGNED - JXH	REVISED
		CHECKED - DD	REVISED
	PLOT SCALE = N.T.S.	DRAWN - GF	REVISED
	PLOT DATE = 6/28/2017	CHECKED - JXH	REVISED

STATE OF ILLINOIS
DEPARTMENT OF TRANSPORTATION

SOIL BORING LOGS – 3
STRUCTURE NO. 016–1704

SHEET NO. S1-50 OF S1-52 SHEETS

F.A.I. RTE.	SECTION	COUNTY	TOTAL SHEETS	SHEET NO.
90/94/290	2014-001 R&B	COOK	696	271

CONTRACT NO. 60X75

ILLINOIS FED. AID PROJECT

BORING LOG 1704-B-04

Wang Engineering
wangeng@wangeng.com
1145 N Main Street
Lombard, IL 60148
Telephone: 630 953-9928
Fax: 630 953-9938

WEI Job No.: 1100-04-01

Client: **AECOM**
Project: **Circle Interchange Reconstruction**
Location: **Section 17, T39N, R14E of 3rd PM**

Datum: NAVD 88
Elevation: 584.72 ft
North: 1897903.29 ft
East: 1171842.81 ft
Station: 5159+38.86
Offset: 50.4076 RT

Elevation (ft)	SOIL AND ROCK DESCRIPTION	Depth (ft)	Sample Type / Recovery	Sample No.	SPT Values (bw/6 in)	Qu (tsf)	Moisture Content (%)
	--WEATHERED BEDROCK--						
481.2	--ROLLER BIT REFUSAL--						
	Strong, light gray, fair rock mass quality, bedded fresh DOLOSTONE, up to 24-inch beds, 1 to 24-inch spaced joints, horizontal and oblique joints with less than 0.2-inch infilling, hard joint wall, with stylolitic surfaces, and moderately vuggy porosity.	105	CORE	1			
	--Run 1 - RECOVERY=94%-- --RQD=69%--	110					
	--Highly fragmented--->						
471.2	Boring terminated at 113.50 ft	115					
		120					
		125					

GENERAL NOTES

Begin Drilling: **10-02-2013** Complete Drilling: **10-03-2013**
Drilling Contractor: **Wang Testing Services** Drill Rig: **D-50 TMR**
Driller: **R&R** Logger: **A. Tomaras** Checked by: **C. Marin**
Drilling Method: **3.25" HSA, boring backfilled upon completion**

WATER LEVEL DATA

While Drilling: **10.50 ft**
At Completion of Drilling: **NA**
Time After Drilling: **NA**
Depth to Water: **NA**

The stratification lines represent the approximate boundary between soil types; the actual transition may be gradual.

WANGENGINC 1100040 1.GPJ WANGENG.GDT 4/4/14

BORING LOG 21-RWB-05

Wang Engineering
wangeng@wangeng.com
1145 N Main Street
Lombard, IL 60148
Telephone: 630 953-9928
Fax: 630 953-9938

WEI Job No.: 1100-04-01

Client: **AECOM**
Project: **Circle Interchange Reconstruction**
Location: **Section 17, T39N, R14E of 3rd PM**

Datum: NAVD 88
Elevation: 583.32 ft
North: 1897919.78 ft
East: 1171915.09 ft
Station: 1613+69.21
Offset: 25.0245 RT

Elevation (ft)	SOIL AND ROCK DESCRIPTION	Depth (ft)	Sample Type	Sample No.	SPT Values (bw/6 in)	Qu (tsf)	Moisture Content (%)
582.9	5-inch thick, white CRUSHED STONE						
	--FILL--						
	Hard, gray and brown CLAY LOAM, trace gravel			1	6 9 9	6.56 S	15
580.3	--FILL--						
	Medium stiff to stiff, gray SILTY CLAY, trace gravel	5		2	2 2 2	0.82 B	20
				3	1 3 3	1.23 B	17
575.3	Soft to medium stiff, gray CLAY to SILTY CLAY, trace gravel						
		10		4	0 2 1	0.41 B	25
				5	0 0 0	0.41 B	26
		15		6	0 0 2	0.57 B	22
				7	2 3 2	0.66 B	22
		20		8	0 2 3	0.74 B	24
				9	2 2 4	0.82 B	23
		25		10	2 3 3	0.74 B	23
		30		11	2 2 2	0.66 B	24
				12	3 4 6	0.66 B	23
		35		13	2 3 3	0.49 B	25
		40		14	3 3 4	0.41 B	23
541.6	Stiff to hard, gray SILTY CLAY LOAM, trace gravel						
		45		15	2 4 8	1.23 B	18
		50		16	6 12 18	4.26 B	15

GENERAL NOTES

Begin Drilling: **09-24-2013** Complete Drilling: **09-25-2013**
Drilling Contractor: **Wang Testing Services** Drill Rig: **CME-55 TMR**
Driller: **R&J** Logger: **A. Tomaras** Checked by: **L. Iordache**
Drilling Method: **2.25" HSA to 10', mud rotary thereafter, boring backfilled upon completion**

WATER LEVEL DATA

While Drilling: **MUD**
At Completion of Drilling: **NA**
Time After Drilling: **NA**
Depth to Water: **NA**

The stratification lines represent the approximate boundary between soil types; the actual transition may be gradual.

WANGENGINC 1100040 1.GPJ WANGENG.GDT 4/4/14

BORING LOG 21-RWB-05

Wang Engineering
wangeng@wangeng.com
1145 N Main Street
Lombard, IL 60148
Telephone: 630 953-9928
Fax: 630 953-9938

WEI Job No.: 1100-04-01

Client: **AECOM**
Project: **Circle Interchange Reconstruction**
Location: **Section 17, T39N, R14E of 3rd PM**

Datum: NAVD 88
Elevation: 583.32 ft
North: 1897919.78 ft
East: 1171915.09 ft
Station: 1613+69.21
Offset: 25.0245 RT

Elevation (ft)	SOIL AND ROCK DESCRIPTION	Depth (ft)	Sample Type	Sample No.	SPT Values (bw/6 in)	Qu (tsf)	Moisture Content (%)
531.6	Gray, coarse SAND						
529.6	Hard, gray SILTY CLAY LOAM, trace gravel	55		17	13 15 21	5.66 B	14
		60		18	16 24 31	7.13 S	11
		65		19	10 16 21	6.81 S	14
516.6	Very dense, gray SILTY LOAM, trace to some gravel						
		70		20	15 25 30	9.02 S	11
		75		21	41 60/3"	NP	10
501.6	Very dense, gray SANDY LOAM, trace gravel						
		80		22	34 45 20/2"	8.69 S	10
		85		23	78/6" 22/1"	NP	9
	--HARD DRILLING-- --Possible Cobbles--						
		90		24	64 45/6"	NP	13
491.6	Very dense, gray GRAVELLY SILTY LOAM, trace to some cobbles						
		95		25	100/6"	1.31 S	13
	--HARD DRILLING-- --Possible Cobbles--						
		100		26	64 40/2"	0.49 S	9

GENERAL NOTES

Begin Drilling: **09-24-2013** Complete Drilling: **09-25-2013**
Drilling Contractor: **Wang Testing Services** Drill Rig: **CME-55 TMR**
Driller: **R&J** Logger: **A. Tomaras** Checked by: **L. Iordache**
Drilling Method: **2.25" HSA to 10', mud rotary thereafter, boring backfilled upon completion**

WATER LEVEL DATA

While Drilling: **MUD**
At Completion of Drilling: **NA**
Time After Drilling: **NA**
Depth to Water: **NA**

The stratification lines represent the approximate boundary between soil types; the actual transition may be gradual.

WANGENGINC 1100040 1.GPJ WANGENG.GDT 4/4/14

0161704-60X75-S51-Boring.dgn

AECOM

USER NAME = floresg	DESIGNED - JXH	REVISED	
	CHECKED - DD	REVISED	
PLOT SCALE = N.T.S.	DRAWN - GF	REVISED	
PLOT DATE = 6/28/2017	CHECKED - JXH	REVISED	

STATE OF ILLINOIS
DEPARTMENT OF TRANSPORTATION

SOIL BORING LOGS - 4
STRUCTURE NO. 016-1704

SHEET NO. S1-51 OF S1-52 SHEETS

F.A.I. RTE.	SECTION	COUNTY	TOTAL SHEETS	SHEET NO.
90/94/290	2014-001 R&B	COOK	696	272
		CONTRACT NO. 60X75		
		ILLINOIS FED. AID PROJECT		

Wang Engineering
wangeng@wangeng.com
1145 N Main Street
Lombard, IL 60148
Telephone: 630 953-9928
Fax: 630 953-9938

BORING LOG 21-RWB-05

WEI Job No.: 1100-04-01

Client: **AECOM**
Project: **Circle Interchange Reconstruction**
Location: **Section 17, T39N, R14E of 3rd PM**

Datum: NAVD 88
Elevation: 583.32 ft
North: 1897919.78 ft
East: 1171915.09 ft
Station: 1613+69.21
Offset: 25.0245 RT

Profile	Elevation (ft)	SOIL AND ROCK DESCRIPTION	Depth (ft)	Sample Type	Sample No.	SPT Values (blw/6 in)	Qu (tsf)	Moisture Content (%)	Profile	Elevation (ft)	SOIL AND ROCK DESCRIPTION	Depth (ft)	Sample Type	Sample No.	SPT Values (blw/6 in)	Qu (tsf)	Moisture Content (%)
	482.3	--WEATHERED BEDROCK--															
	481.3	--ROLLER BIT REFUSAL--															
		Boring terminated at 102.00 ft															
			105														
			110														
			115														
			120														
			125														

GENERAL NOTES

Begin Drilling: **09-24-2013** Complete Drilling: **09-25-2013**
Drilling Contractor: **Wang Testing Services** Drill Rig: **CME-55 TMR**
Driller: **R&J** Logger: **A. Tomaras** Checked by: **L. Iordache**
Drilling Method: **2.25" HSA to 10', mud rotary thereafter, boring backfilled upon completion**

WATER LEVEL DATA

While Drilling: **MUD**
At Completion of Drilling: **NA**
Time After Drilling: **NA**
Depth to Water: **NA**

The stratification lines represent the approximate boundary between soil types; the actual transition may be gradual.

WANGENGINC 1100401.GPJ WANGENG.GDT 4/4/14

0161704-60X75-S52-Boring.dgn

AECOM	USER NAME = floresg	DESIGNED - JXH	REVISED
		CHECKED - DD	REVISED
	PLOT SCALE = N.T.S.	DRAWN - GF	REVISED
	PLOT DATE = 6/28/2017	CHECKED - JXH	REVISED

STATE OF ILLINOIS
DEPARTMENT OF TRANSPORTATION

SOIL BORING LOGS – 5
STRUCTURE NO. 016–1704
SHEET NO. S1-52 OF S1-52 SHEETS

F.A.I. RTE.	SECTION	COUNTY	TOTAL SHEETS	SHEET NO.
90/94/290	2014-001 R&B	COOK	696	273
		CONTRACT NO. 60X75		
		ILLINOIS FED. AID PROJECT		

FOR INFORMATION ONLY

33

2424.23-B 32 1

INDEX OF SHEETS

SHEET NO.	DESCRIPTION	PAGE NO.
	GENERAL PLANS	
G-1	TITLE SHEET	1
G-2	GENERAL PLAN-PROFILES	2
G-3	PROFILES AND SECTIONS	3
G-4	WESTBOUND ROADWAY	4
G-5	EASTBOUND ROADWAY	5
G-6	TYPICAL CROSS SECTION	6
G-7	DRAINAGE PLAN	7
G-8	DRAINAGE DETAILS	8
G-9	DOWNSPOUT DETAILS	9
G-10	CROSS SECTIONS-STATION 355+52 TO 356+70	10
G-11	CROSS SECTIONS-STATION 357+00 TO 358+50	11
G-12	CROSS SECTIONS-STATION 359+00 TO 360+37.2	12
	STRUCTURAL PLANS	
S-1	KEY PLAN	13
S-2	SUB-PIERS AND FOUNDATION GIRDERS	14
S-3	CONCRETE BENTS-DIMENSIONS AND ELEVATIONS	15
S-4	CONCRETE BENTS-REINFORCEMENT AND DETAILS	16
S-5	STRUCTURAL STEEL-FRAMING PLAN	17
S-6	STRUCTURAL STEEL-CROSS FRAMES AND GIRDER DETAILS	18
S-7	STRUCTURAL STEEL-GIRDER BEARINGS AND DEAD LOAD DEFLECTIONS	19
S-8	STRUCTURAL STEEL-EXPANSION DEVICES	20
S-9	DECK SLAB PLAN	21
S-10	DECK SLAB DETAILS	22
	ARCHITECTURAL PLANS	
A-1	LOCATION PLAN OF RAILING	23
A-2	PLANS AND ELEVATIONS-WESTBOUND ROADWAY-PIERS 5 TO PIER C1	24
A-3	PLANS AND ELEVATIONS-WESTBOUND ROADWAY-PIERS 2 TO PIER 5	25
A-4	PLANS AND ELEVATIONS-EASTBOUND ROADWAY-PIERS 5 TO PIER C1	26
A-5	PLANS AND ELEVATIONS-EASTBOUND ROADWAY-PIERS 2 TO PIER 5	27
A-6	PLANS AND ELEVATIONS-ROADWAY-RAILING BETWEEN PIERS 1 & 2	28
A-7	MISCELLANEOUS RAILING DETAILS-WOOD GUARD RAIL AND SIGN	29
	ELECTRICAL PLANS	
E-1	ELECTRICAL CONDUITS-PLAN AND SECTIONS	30
E-2	ELECTRICAL CONDUITS-EXPANSION JOINT DETAILS	31
E-3	ELECTRICAL CONDUITS-DETAILS	32

STATE OF ILLINOIS
CITY OF CHICAGO
DEPARTMENT OF SUBWAYS AND SUPERHIGHWAYS

WEST ROUTE SUPERHIGHWAY

PLANS FOR SECTION 2424.23-B HALSTED STREET INTERCHANGE

ROADWAY STRUCTURES

F.A. ROUTE NO. 131 PROJECT UI-261(37)

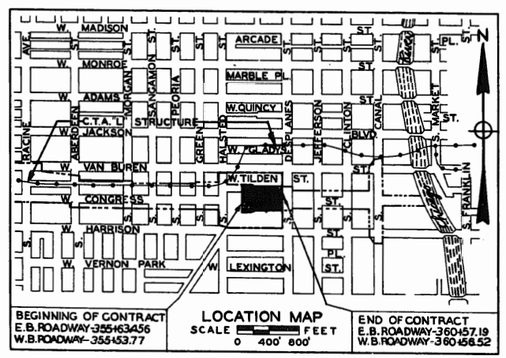

GROSS LENGTH OF CONTRACT = 502.75 FEET OR 0.095 MILES
NET LENGTH OF CONTRACT = 502.75 FEET OR 0.095 MILES

SUMMARY OF ITEMS

ITEM NO.	UNIT	QUANTITY	DESCRIPTION
1	CU.YD.	20,000	SPECIAL EXCAVATION
2	CU.YD.	980	CLASS "A" EXCAVATION FOR STRUCTURES
3	CU.YD.	3,425	CLASS "X" CONCRETE
4	CU.FT.	26,000	SUB-PIERS
5	LB.	820,000	REINFORCEMENT BARS
6	LB.	2,330,000	STRUCTURAL STEEL
7	LIN.FT.	25	8-INCH SEWER, TYPE 2
8	LIN.FT.	330	10-INCH SEWER, TYPE 2
9	LIN.FT.	150	12-INCH SEWER, TYPE 2
10	LIN.FT.	130	15-INCH SEWER, TYPE 2
11	LIN.FT.	145	27-INCH SEWER, TYPE 2
12	LIN.FT.	325	30-INCH SEWER, TYPE 2
13	CU. YD.	420	TRENCH BACKFILL
14	EACH	8	CATCH BASINS, TYPE A
15	EACH	4	MANHOLES, TYPE A, 4 FT.
16	EACH	3	MANHOLES, TYPE A, 3 FT.
17	LB.	7,300	MISCELLANEOUS IRON CASTINGS
18	LB.	1,500	MISCELLANEOUS STEEL
19	LIN. FT.	230	6-INCH CAST IRON PIPE AND FITTINGS
20	LIN. FT	380	8-INCH CAST IRON PIPE AND FITTINGS
21	SQ.FT.	1,675	PREMOULDED JOINT FILLER
22	LIN.FT.	2,100	METAL HANDRAIL
23	LIN.FT.	145	WOOD GUARD RAIL
24	LIN.FT.	3,650	3½ INCH CONDUIT

EXPRESSWAY MAINTENANCE

CONVENTIONAL SIGNS

COMMONWEALTH EDISON CO
WESTERN UNION CO.
WATER
GAS
SEWER
SEWER MANHOLE
CATCH BASIN
VALVE VAULT
LIGHT STANDARD
FIRE HYDRANT
R.O.W LINE
SEWER MANHOLE (NEW)
SEWER MANHOLE (TO BE ADJUSTED)
CATCH BASIN (NEW)
CATCH BASIN (ABANDON)
C.T.A. "L" STRUCTURE

CITY OF CHICAGO
DEPARTMENT OF SUBWAYS AND SUPERHIGHWAYS
DATE APRIL 23, 1952
APPROVED M. E. Ramm
ENGINEER OF SUBWAY DESIGN
APPROVED [redacted]
ASST. CHIEF SUBWAY ENGINEER
APPROVED Dick Van Bolt
CHIEF SUBWAY ENGINEER
APPROVED [redacted]
COMMISSIONER

THE DEPARTMENT OF PUBLIC WORKS AND BUILDINGS
DIVISION OF HIGHWAYS
APPROVED [redacted] 19[redacted]
[redacted]
CHIEF HIGHWAY ENGINEER
APPROVED [redacted] 19[redacted]
[redacted]
DIRECTOR

DEPARTMENT OF COMMERCE
BUREAU OF PUBLIC ROADS
RECOMMENDED FOR APPROVAL
[redacted] DISTRICT ENGINEER [redacted] DATE
APPROVED
[redacted] DIVISION ENGINEER [redacted] DATE

PLANS APPROVED
BY STATE DIVISION OF HIGHWAYS

SHEET NO. G-1 OF 32 SHEETS

0161704-60X75-EXT-01.dgn

AECOM

USER NAME = floresg	DESIGNED -	REVISED	
	CHECKED -	REVISED	
PLOT SCALE = N.T.S.	DRAWN -	REVISED	
PLOT DATE = 5/5/2017	DATE - 5/10/2017	REVISED	

STATE OF ILLINOIS
DEPARTMENT OF TRANSPORTATION

EXISTING PLANS
STRUCTURE NO. 016-1029
SHEET NO. 1 OF 19 SHEETS

F.A.I. RTE.	SECTION	COUNTY	TOTAL SHEETS	SHEET NO.
90/94/290	2014-001 R&B	COOK	696	274

CONTRACT NO. 60X75
ILLINOIS FED. AID PROJECT

FOR INFORMATION ONLY

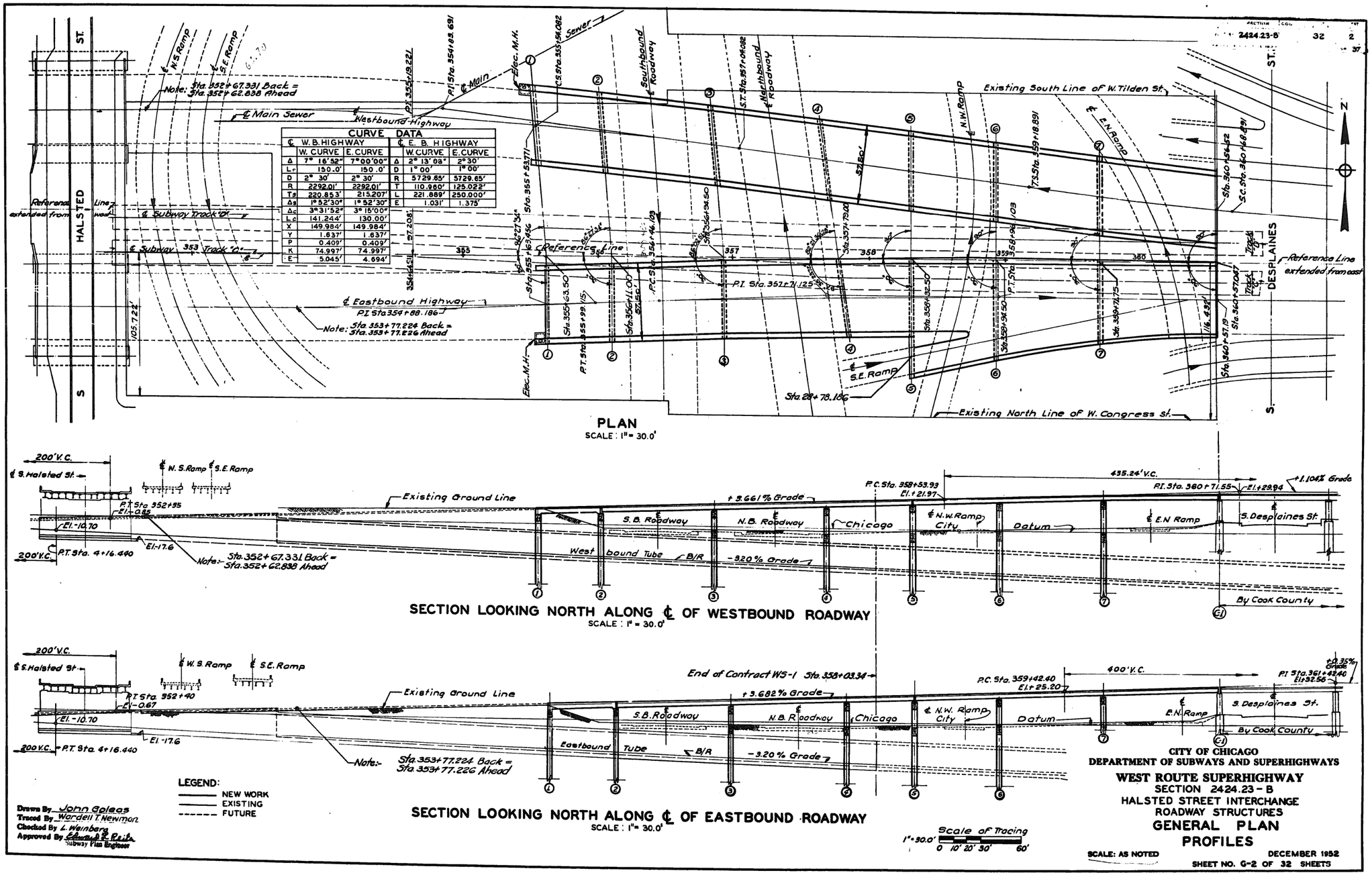

PLAN
SCALE : 1" = 30.0'

CURVE DATA

℄ W. B. HIGHWAY			℄ E. B. HIGHWAY		
	W. CURVE	E. CURVE		W. CURVE	E. CURVE
Δ	7° 16'52"	7° 00'00"	Δ	2° 13'08"	2° 30'
Lc	150.0'	150.0'	D	1° 00'	1° 00'
D	2° 30'	2° 30'	R	5729.65'	5729.65'
R	2292.01'	2292.01'	T	110.960'	125.022'
Ts	220.853'	215.207'	L	221.889'	250.000'
Δs	1° 52'30"	1° 52'30"	E	1.031'	1.375'
Δc	3° 31'52"	3° 15'00"			
Lc	141.244'	130.00'			
X	149.984'	149.984'			
Y	1.637'	1.637'			
P	0.409'	0.409'			
K	74.997'	74.997'			
E	5.045'	4.694'			

SECTION LOOKING NORTH ALONG ℄ OF WESTBOUND ROADWAY
SCALE : 1" = 30.0'

SECTION LOOKING NORTH ALONG ℄ OF EASTBOUND ROADWAY
SCALE : 1" = 30.0'

CITY OF CHICAGO
DEPARTMENT OF SUBWAYS AND SUPERHIGHWAYS

WEST ROUTE SUPERHIGHWAY
SECTION 2424.23 - B
HALSTED STREET INTERCHANGE
ROADWAY STRUCTURES
GENERAL PLAN
PROFILES

SCALE: AS NOTED
DECEMBER 1952
SHEET NO. G-2 OF 32 SHEETS

AECOM

USER NAME = floresg	DESIGNED -	REVISED
	CHECKED -	REVISED
PLOT SCALE = N.T.S.	DRAWN -	REVISED
PLOT DATE = 5/5/2017	DATE - 5/10/2017	REVISED

STATE OF ILLINOIS
DEPARTMENT OF TRANSPORTATION

EXISTING PLANS
STRUCTURE NO. 016-1029
SHEET NO. 2 OF 19 SHEETS

F.A.I. RTE.	SECTION	COUNTY	TOTAL SHEETS	SHEET NO.
90/94/290	2014-001 R&B	COOK	696	275

CONTRACT NO. 60X75
ILLINOIS FED. AID PROJECT

0161704-60X75-EXT-02.dgn

FOR INFORMATION ONLY

ROUTE NO.	SECTION	COUNTY	TOTAL SHEETS	SHEET NO.
F.A. 131	2424.23-B	COOK	32	13
FED. ROAD DIV. NO. 4	ILLINOIS		PROJECT LN 281 (37)	

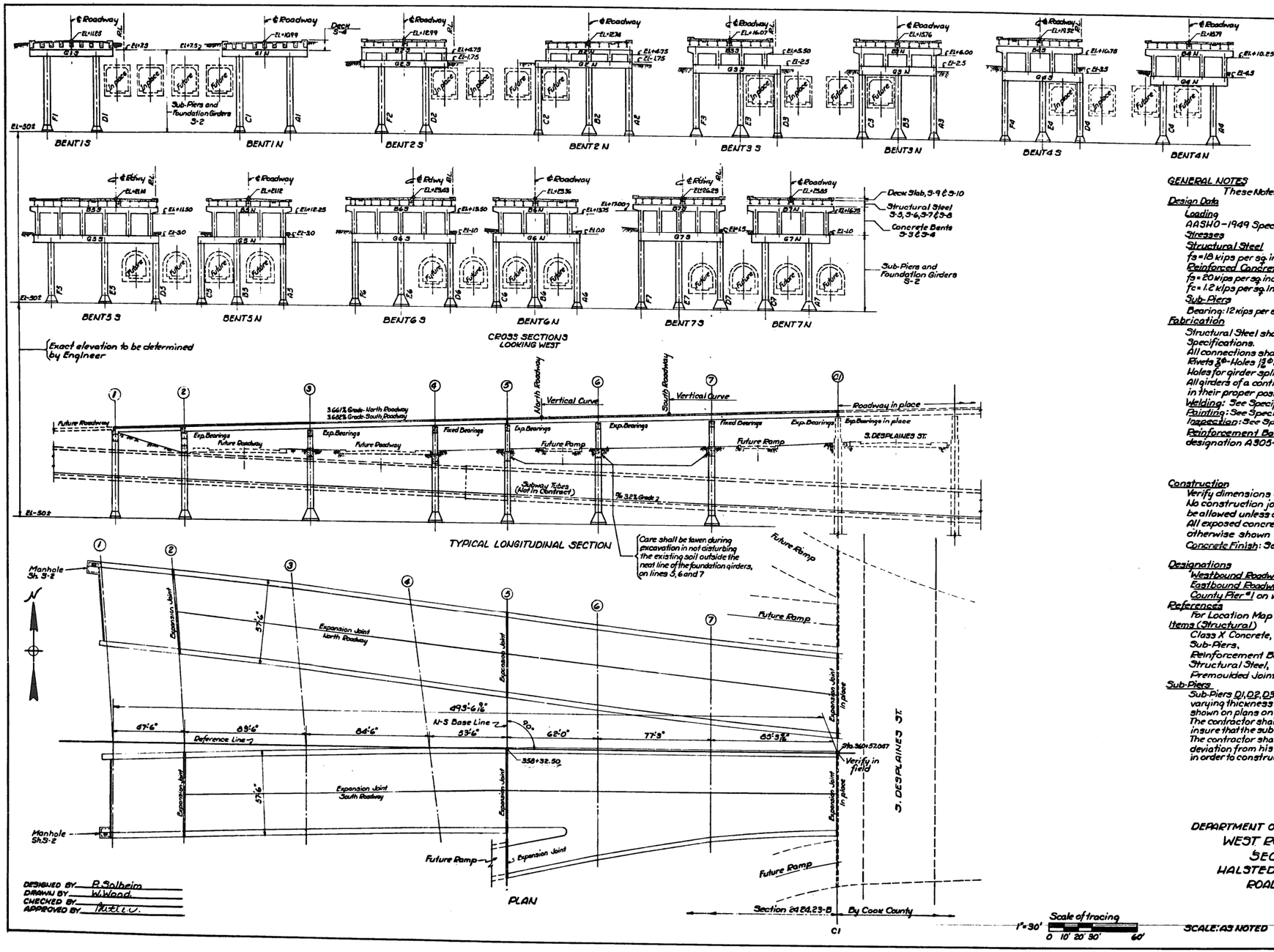

Note:
Roadway elevations given are at center line of Sub-Piers

R.L. = Reference Line

GENERAL NOTES

These Notes apply to Sheets S-1 to S-10 inclusive

Design Data

Loading
AASHO-1949 Specifications - H20-S16-44

Stresses

Structural Steel
f_s = 18 kips per sq. inch

Reinforced Concrete
f_s = 20 kips per sq. inch } n=10
f_c = 1.2 kips per sq. inch }

Sub-Piers
Bearing: 12 kips per sq. foot.

Fabrication

Structural Steel shall conform to current A.S.T.M.-A7 Specifications.
All connections shall be riveted unless otherwise shown
Rivets 7/8"ϕ - Holes 15/16"ϕ unless otherwise shown.
Holes for girder splices to be reamed or drilled - See Detail S-5
All girders of a continuous unit shall be assembled in the shop in their proper position
Welding: See Specifications
Painting: See Specifications
Inspection: See Specifications
Reinforcement Bars shall conform to current A.S.T.M. designation A305-49 - Lap 20 bar Dia. unless otherwise noted.

Construction

Verify dimensions and elevations of adjoining structure in field
No construction joints except those shown on the plans will be allowed unless otherwise ordered by the Engineer
All exposed concrete edges shall have 3/4" chamfer unless otherwise shown on the plans.
Concrete Finish: See Specifications

Designations

Westbound Roadway is designated North Roadway
Eastbound Roadway is designated South Roadway
County Pier #1 on west side of Desplaines Street is designated C1

References

For Location Map and index of drawings see Sheet G-1

Items (Structural)

Class X Concrete,	Item 3
Sub-Piers,	Item 4
Reinforcement Bars,	Item 5
Structural Steel,	Item 6
Premoulded Joint Filler,	Item 21

Sub-Piers

Sub-Piers D1, D2, D3, E3, D4, and E4 are to be constructed thru varying thickness of gravel, crushed stone, and clay backfill as shown on plans on file in the Commissioner's office.
The contractor shall take such precautions as are necessary to insure that the sub-piers will not be in contact with the subway tubes.
The contractor shall submit to the Engineer any planned deviation from his normal procedure that may become necessary, in order to construct these sub-piers.

CITY OF CHICAGO
DEPARTMENT OF SUBWAYS AND SUPERHIGHWAYS
WEST ROUTE SUPERHIGHWAY
SECTION 2424.23-B
HALSTED STREET INTERCHANGE
ROADWAY STRUCTURES
KEY PLAN

DESIGNED BY P. Solheim
DRAWN BY W. Wood
CHECKED BY
APPROVED BY [signature]

Scale of tracing 1" = 30'
0 10' 20' 30' 60'

SCALE: AS NOTED

DECEMBER 1952
SHEET NO. S-1 OF 32 SHEETS

0161704-60X75-EXT-03.dgn

AECOM

USER NAME = floresg	DESIGNED -	REVISED
	CHECKED -	REVISED
PLOT SCALE = N.T.S.	DRAWN -	REVISED
PLOT DATE = 5/5/2017	DATE - 5/10/2017	REVISED

STATE OF ILLINOIS
DEPARTMENT OF TRANSPORTATION

EXISTING PLANS
STRUCTURE NO. 016-1029
SHEET NO. 3 OF 19 SHEETS

F.A.I. RTE.	SECTION	COUNTY	TOTAL SHEETS	SHEET NO.
90/94/290	2014-001 R&B	COOK	696	276
		CONTRACT NO. 60X75		
		ILLINOIS FED. AID PROJECT		

FOR INFORMATION ONLY

ROUTE NO.	SECTION	COUNTY	TOTAL SHEETS	SHEET NO.
F.A. 131	2424.23-B	COOK	32	14

FED. ROAD DIST. NO. 6 ILLINOIS HIGHWAY U1 201 (37)

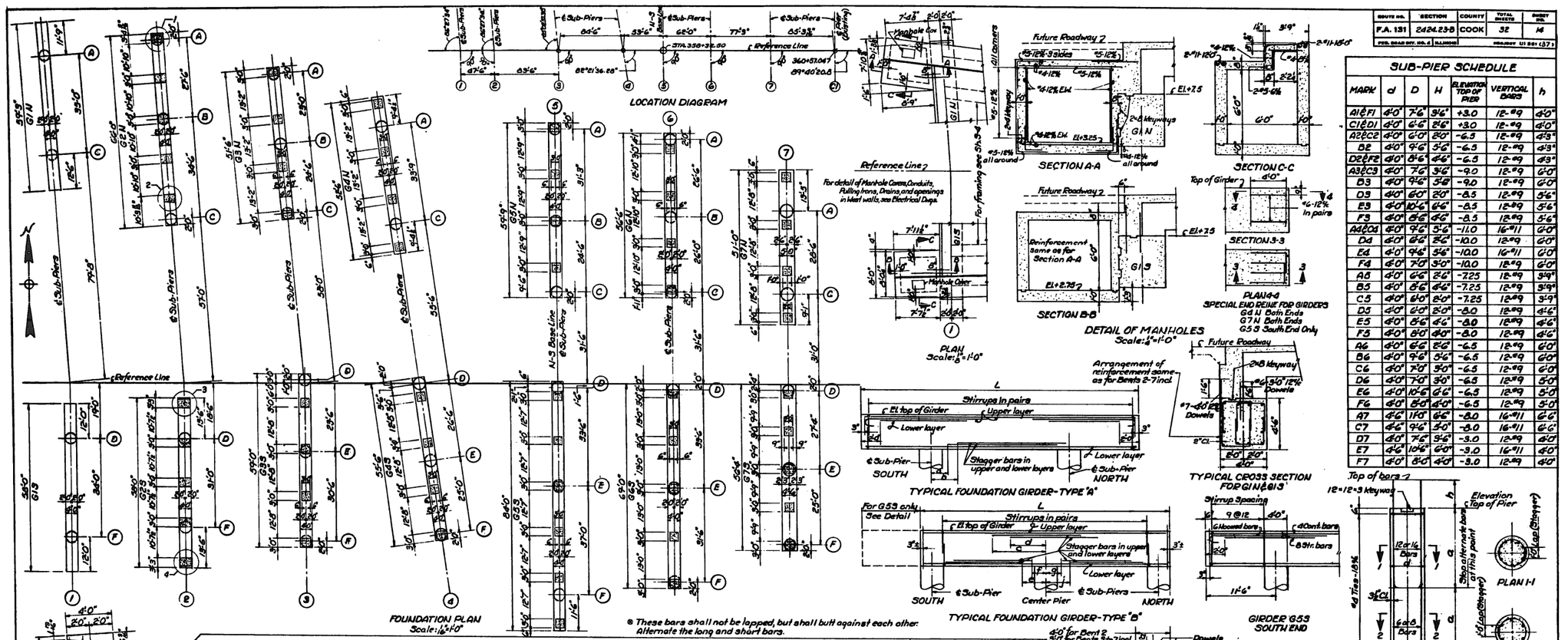

SUB-PIER SCHEDULE

MARK	d	D	H	ELEVATION TOP OF PIER	VERTICAL BARS	h
A1&F1	4'-0"	7'-6"	9'-6"	+3.0	12-#9	4'-0"
C1&D1	4'-0"	6'-6"	8'-6"	+3.0	12-#9	4'-0"
A2&C2	4'-0"	6'-0"	8'-0"	-6.5	12-#9	4'-9"
D2	4'-0"	9'-6"	5'-6"	-6.5	12-#9	4'-9"
D2&F2	4'-0"	8'-6"	4'-6"	-6.5	12-#9	4'-9"
A3&C3	4'-0"	7'-6"	3'-6"	-9.0	12-#9	6'-0"
D3	4'-0"	9'-6"	3'-6"	-9.0	12-#9	6'-0"
D3	4'-0"	6'-0"	2'-0"	-8.5	12-#9	5'-6"
E3	4'-0"	10'-6"	6'-6"	-8.5	12-#9	5'-6"
F3	4'-0"	8'-6"	4'-6"	-8.5	12-#9	5'-6"
A4&C4	4'-0"	9'-6"	5'-6"	-11.0	16-#11	6'-0"
D4	4'-0"	8'-6"	2'-6"	-10.0	12-#9	6'-0"
E4	4'-0"	9'-6"	3'-6"	-10.0	16-#11	6'-0"
F4	4'-0"	7'-0"	3'-0"	-10.0	12-#9	6'-0"
A5	4'-0"	6'-6"	2'-6"	-7.25	12-#9	3'-9"
B5	4'-0"	8'-6"	4'-6"	-7.25	12-#9	3'-9"
C5	4'-0"	8'-0"	2'-0"	-7.25	12-#9	3'-9"
D5	4'-0"	6'-0"	2'-0"	-8.0	12-#9	4'-6"
E5	4'-0"	8'-6"	4'-6"	-8.0	12-#9	4'-6"
F5	4'-0"	8'-0"	4'-0"	-8.0	12-#9	4'-6"
A6	4'-0"	6'-6"	2'-6"	-6.5	12-#9	6'-0"
B6	4'-0"	9'-6"	3'-6"	-6.5	12-#9	6'-0"
C6	4'-0"	7'-0"	3'-0"	-6.5	12-#9	6'-0"
D6	4'-0"	7'-0"	3'-0"	-6.5	12-#9	5'-0"
E6	4'-0"	10'-6"	6'-6"	-6.5	12-#9	5'-0"
F6	4'-0"	8'-0"	4'-0"	-6.5	12-#9	5'-0"
A7	4'-6"	11'-0"	6'-6"	-8.0	16-#11	6'-6"
C7	4'-6"	9'-6"	3'-0"	-8.0	16-#11	6'-6"
D7	4'-0"	7'-6"	3'-6"	-9.0	12-#9	4'-0"
E7	4'-6"	10'-6"	6'-0"	-9.0	16-#11	4'-0"
F7	4'-0"	8'-0"	4'-0"	-9.0	12-#9	4'-0"

FOUNDATION GIRDER SCHEDULE

TYPE	MARK	W	T	L	ELEVATION TOP OF GIRDER	TOP BARS #11 UPPER LAYER NO.	LENGTH	NO.	LENGTH	LOWER LAYER NO.	LENGTH	NO.	LENGTH	DIMENSIONS
						CONTINUOUS		HOOKED SOUTH END		HOOKED NORTH END		SOUTH END		NORTH END
A	G1N	4'-0"	4'-6"	54'-3"	+7.5	4	58'-9"	6	26'-0"	6	23'-0"	2	18'-0"	4 17'-0"
A	G1S	4'-0"	4'-6"	58'-0"	+7.5	4	57'-6"	6	23'-0"	6	23'-0"	4	17'-0"	2 17'-0"
A	G2S	4'-0"	4'-9"	58'-0"	-1.75	4	57'-6"	6	29'-0"	6	24'-0"	10	22'-0"	10 22'-0"
A	G4N	4'-0"	6'-6"	52'-6"	-4.5	4	52'-0"	6	19'-6"	6	19'-6"	6	13'-6"	6 13'-6"
A	G7N	5'-0"	7'-0"	51'-0"	-1.0	4	50'-6"	9	19'-6"	9	26'-6"	3	15'-6"	13 19'-6"
B						CONTINUOUS		HOOKED SOUTH END		AT CENTER PIER		SOUTH END		AT CENTER PIER
B	G2N	4'-0"	4'-7"	66'-0"	-1.75	4	52'-0"* 4 15'-0"*	—	—	6	17'-0"	—	—	10 17'-0"
B	G3S	4'-0"	6'-0"	57'-0"	-2.5	4	58'-6"	—	—	6	17'-0"	—	—	6 17'-0"
B	G3N	4'-0"	6'-6"	51'-6"	-2.5	4	51'-0"	—	—	6	15'-0"	—	—	4 15'-0"
B	G4S	4'-0"	6'-6"	55'-6"	-3.5	4	55'-0"	—	—	6	15'-0"	—	—	4 15'-0"
B	G5N	4'-0"	5'-5"	59'-9"	-3.0	4	59'-3"	—	—	6	15'-0"	—	—	6 15'-0"
B	G6S	4'-0"	5'-6"	64'-0"	-1.0	4	50'-0"* 4 18'-6"*	—	—	6	19'-0"	—	—	10 19'-0"
B	G6N	4'-0"	6'-6"	56'-6"	0.0	4	56'-0"	—	—	6	15'-0"	—	—	6 15'-0"
B	G7S	4'-6"	6'-6"	56'-6"	+1.5	4	55'-9"	—	—	6	15'-0"	—	—	10 15'-0"
B	G5S	4'-0"	5'-0"	84'-0"	-3.0	4	59'-0"* 4 28'-6"*	6	29'-6"	6	17'-0"	8	17'-6"	6 17'-0"

TYPE	MARK	BOTTOM BARS #11 LOWER LAYER NO.	LENGTH	NO.	LENGTH	UPPER LAYER NO.	LENGTH	NO.	LENGTH	DIMENSIONS a	b	c	d	STIRRUPS #6 PAIRS REQ'D	TOTAL NO. REQ'D	SPACINGS SHOWN ARE FROM SOUTH TO NORTH FIGURES THUS (12) ARE SPACINGS IN INCHES FROM END	CANTILEVER	SUB PIER	BETWEEN SUB-PIERS	SUB PIER	CANTILEVER	FROM END
		CONTINUOUS		BETWEEN PIERS				BETWEEN PIERS														
A	G1N	4	58'-9"	6	25'-0"	—	—	6	25'-0"	—	—	4'-0"	6'-0"	—	—	48	192	6	6(18)-2(6)	4'-0"	4(6)-4(12)-14(18)-4(12)-4(6)	4'-0"	1(6)-1(18)-3(18)	6
A	G1S	4	57'-6"	6	24'-0"	—	—	4	24'-0"	—	—	4'-0"	6'-0"	—	—	45	180	6	6(18)-1(6)	4'-0"	3(6)-4(12)-14(18)-4(12)-3(6)	4'-0"	1(6)-6(18)	6
A	G2S	4	57'-6"	6	15'-0"	—	—	—	—	—	—	7'-0"	9'-0"	—	—	52	208	6	6(18)-2(12)	4'-0"	6(6)-21(12)-6(6)	4'-0"	2-(12)-6(18)	6
A	G4N	4	52'-0"	6	22'-0"	—	—	4	22'-0"	—	—	5'-0"	6'-9"	—	—	51	204	6	4(12)-3(11½)	4'-0"	2(6)-11(9)-7(18)-12(9)-2(6)	4'-0"	3(11½)-4(12)	6
A	G7N	4	50'-6"	4	26'-0"	—	—	—	—	—	—	2'-3"	2'-9"	—	—	48	192	6	3(18)-2(6)	4'-6"	2(6)-9(12)-6(18)-10(6)	4'-6"	2(10)-9(12)	6
B																						
B	G2N	4	53'-6"* 4 30'-0"*	6	26'-0"	6	15'-0"	8	26'-0"	2	15'-0"	9'-0"	7'-0"	7'-0"	9'-0"	56	224	4'-0"	4(12)-7(18)-18(9)-1(6)	4'-0"	4(9)-10(12)-6(18)-2(9)	4'-0"
B	G3S	4	55'-6"	6	21'-0"	6	15'-0"	10	21'-0"	4	15'-0"	9'-6"	6'-6"	6'-6"	9'-6"	48	192	4'-0"	1(9)-7(18)-19(9)-2(6)	4'-0"	3(6)-11(18)-3(10)	4'-0"
B	G3N	4	51'-0"	6	15'-0"	4	15'-0"	—	—	—	—	6'-0"	6'-0"	6'-0"	6'-0"	41	164	4'-0"	1(6)-2(18)-10(9)-1(6)	4'-0"	1(6)-10(9)-7(18)-1(6)	4'-0"
B	G4S	4	55'-0"	6	17'-0"	6	22'-0"	—	—	—	—	6'-6"	6'-6"	8'-0"	6'-0"	45	180	4'-0"	1(6)-7(18)-9(18)-2(6)	4'-0"	4(6)-6(9)-2(18)-4(9)-2(6)	4'-0"
B	G5N	4	59'-3"	6	15'-0"	6	22'-0"	2	15'-0"	10	22'-0"	8'-0"	6'-0"	5'-0"	7'-0"	43	172	4'-0"	2(9)-12(18)-2(6)	4'-0"	1(9)-17(12)-6(18)-1(6)	4'-0"
B	G6S	4	58'-6"* 4 35'-0"*	6	19'-0"	6	22'-0"	8	19'-0"	8	22'-0"	10'-0"	7'-0"	7'-0"	10'-0"	57	228	4'-0"	1(6)-7(18)-15(12)-3(6)	4'-0"	3(9)-15(18)-6(18)-3(9)-2(6)	4'-0"
B	G6N	4	56'-0"	6	15'-0"	6	20'-0"	—	—	—	—	6'-0"	6'-0"	6'-0"	6'-0"	44	176	4'-0"	1(9)-7(18)-9(12)-3(7)	4'-0"	2(6)-10(9)-9(18)-1(6)	4'-0"
B	G7S	4	55'-9"	6	15'-0"	6	17'-0"	6	15'-0"	10	17'-0"	5'-0"	5'-0"	5'-0"	5'-0"	53	212	4'-0"	2(9)-5(18)-15(9)-1(6)	4'-6"	4(7)-15(9)-5(18)-4(6)	4'-0"
B	G5S	4	59'-0"* 4 28'-6"*	6	25'-0"	6	25'-0"	2	25'-0"	4	25'-0"	7'-0"	5'-0"	5'-0"	7'-0"	68	272	4'-0"	6(6)-4(9)-16(18)-4(9)	4'-0"	6(9)-16(18)-4(9)-2(6)	4'-0"

* These bars shall not be lapped, but shall butt against each other. Alternate the long and short bars.

DESIGNED BY B. Salhein
DRAWN BY W. Wood
CHECKED BY
APPROVED BY

Scales of tracing: 1/16"=1'-0" (0 4 8 12 16 32'); 1/4"=1'-0" (0 1 2 3 4 8')

SCALE: AS NOTED

CITY OF CHICAGO
DEPARTMENT OF SUBWAYS AND SUPERHIGHWAYS
WEST ROUTE SUPERHIGHWAY
SECTION 2424.23-B
HALSTED STREET INTERCHANGE
ROADWAY STRUCTURES
SUB-PIERS
AND FOUNDATION GIRDERS

DECEMBER 1952
SHEET NO. 3-2 OF 32 SHEETS

0161704-60X75-EXT-04.dgn

AECOM

USER NAME = floresg	DESIGNED -	REVISED
	CHECKED -	REVISED
PLOT SCALE = N.T.S.	DRAWN -	REVISED
PLOT DATE = 5/5/2017	DATE - 5/10/2017	REVISED

STATE OF ILLINOIS
DEPARTMENT OF TRANSPORTATION

EXISTING PLANS
STRUCTURE NO. 016-1029
SHEET NO. 4 OF 19 SHEETS

F.A.I. RTE.	SECTION	COUNTY	TOTAL SHEETS	SHEET NO.
90/94/290	2014-001 R&B	COOK	696	277

CONTRACT NO. 60X75
ILLINOIS FED. AID PROJECT

FOR INFORMATION ONLY

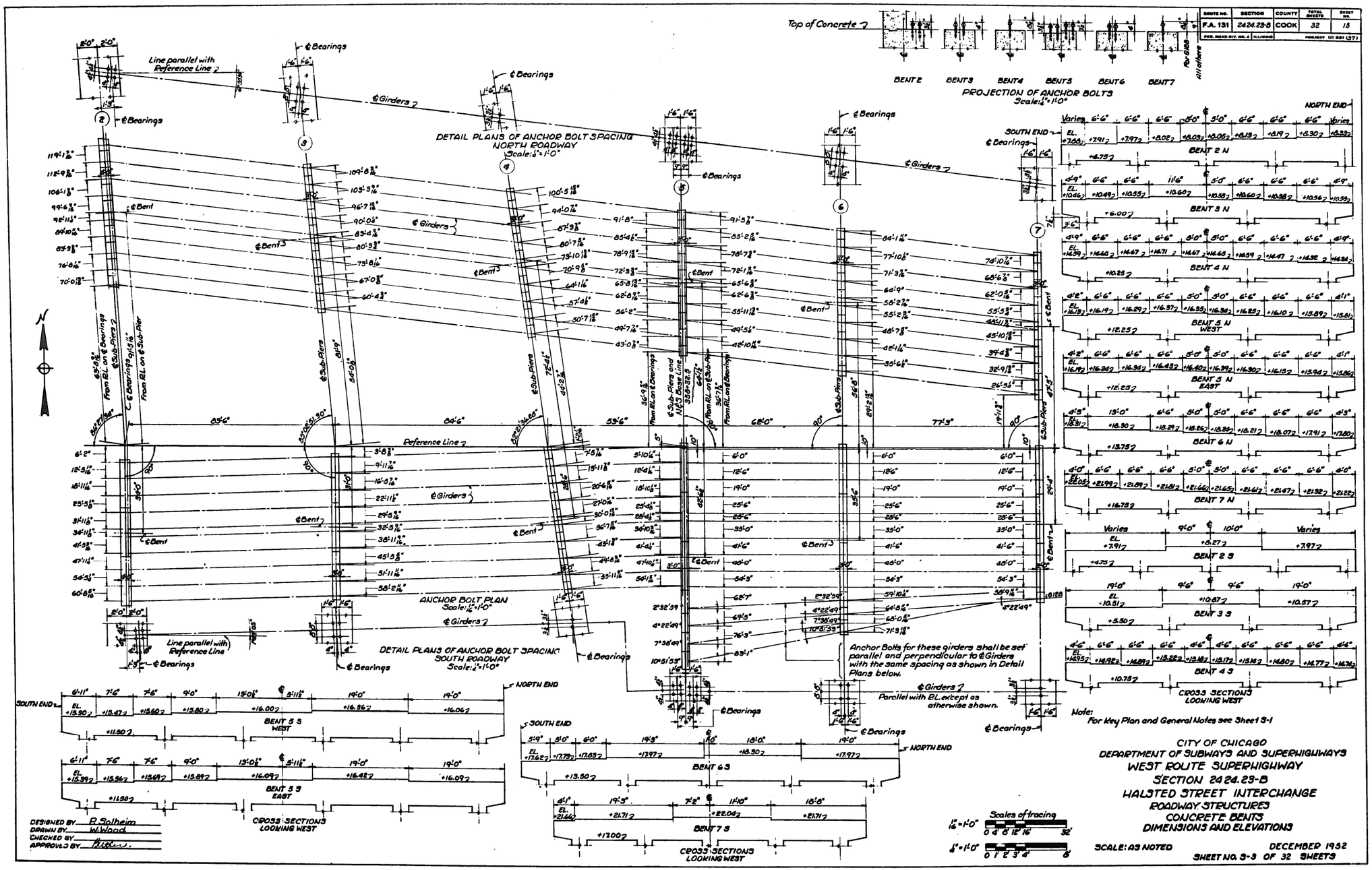

AECOM	USER NAME = floresg	DESIGNED -	REVISED	STATE OF ILLINOIS DEPARTMENT OF TRANSPORTATION	EXISTING PLANS STRUCTURE NO. 016-1029	F.A.I. RTE.	SECTION	COUNTY	TOTAL SHEETS	SHEET NO.
		CHECKED -	REVISED			90/94/290	2014-001 R&B	COOK	696	278
	PLOT SCALE = N.T.S.	DRAWN -	REVISED			CONTRACT NO. 60X75				
	PLOT DATE = 5/5/2017	DATE - 5/10/2017	REVISED		SHEET NO. 5 OF 19 SHEETS	ILLINOIS FED. AID PROJECT				

0161704-60X75-EXT-05.dgn

FOR INFORMATION ONLY

ROUTE NO	SECTION	COUNTY	TOTAL SHEETS	SHEET NO.
F.A. 131	2424.23-B	COOK	32	16
FED. ROAD DIV. NO. 6	ILLINOIS		PROJECT UI 261 (57)	

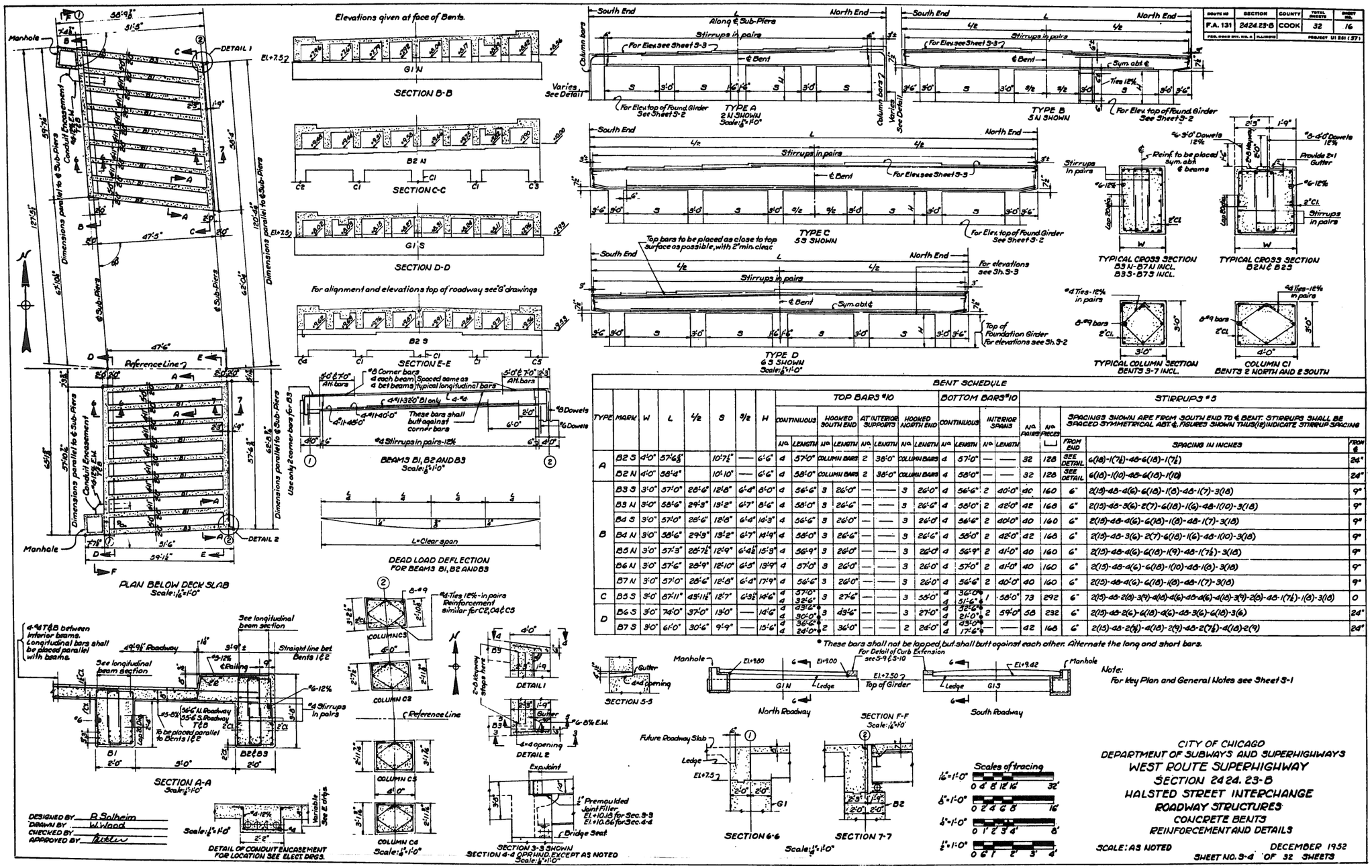

BENT SCHEDULE

TYPE	MARK	W	L	1/2	S	3/2	H	TOP BARS #10 CONTINUOUS		HOOKED SOUTH END		AT INTERIOR SUPPORTS		HOOKED NORTH END		BOTTOM BARS #10 CONTINUOUS		INTERIOR SPANS		STIRRUPS #5 N° PAIRS	N° PIECES	SPACINGS SHOWN ARE FROM SOUTH END TO ℄ BENT. STIRRUPS SHALL BE SPACED SYMMETRICAL ABT ℄. FIGURES SHOWN THUS (18) INDICATE STIRRUP SPACING		
								N°	LENGTH	N°	LENGTH	N°	LENGTH	N°	LENGTH	N°	LENGTH	N°	LENGTH			FROM END	SPACING IN INCHES	FROM ℄
A	B2 S	4'-0"	57'-6 5/8"		10'-7 1/2"	—	6'-6"	4	57'-0"	COLUMN BARS		2	38'-0"	COLUMN BARS		4	57'-0"	—	—	32	128	SEE DETAIL	6(18)-1(7 1/2)-4B-6(18)-1(7 1/2)	24"
	B2 N	4'-0"	58'-4"		10'-10"	—	6'-6"	4	58'-0"	COLUMN BARS		2	38'-0"	COLUMN BARS		4	58'-0"	—	—	32	128	SEE DETAIL	6(18)-1(10)-4B-6(18)-1(10)	24"
B	B3 S	3'-0"	57'-0"	28'-6"	12'-8"	6'-4"	8'-0"	4	56'-6"	3	26'-0"	—	—	3	26'-0"	4	56'-6"	2	40'-0"	40	160	6"	2(15)-4B-4(6)-6(18)-1(8)-4B-1(7)-3(18)	9"
	B3 N	3'-0"	58'-6"	29'-3"	13'-2"	6'-7"	8'-6"	4	58'-0"	3	26'-6"	—	—	3	26'-6"	4	58'-0"	2	42'-0"	42	168	6"	2(15)-4B-3(6)-2(7)-6(18)-1(6)-4B-1(10)-3(18)	9"
	B4 S	3'-0"	57'-0"	28'-6"	12'-8"	6'-4"	14'-3"	4	56'-6"	3	26'-0"	—	—	3	26'-0"	4	56'-6"	2	40'-0"	40	160	6"	2(15)-4B-4(6)-6(18)-1(8)-4B-1(7)-3(18)	9"
	B4 N	3'-0"	58'-6"	29'-9"	13'-2"	6'-7"	14'-9"	4	58'-0"	3	26'-6"	—	—	3	26'-6"	4	58'-0"	2	42'-0"	42	168	6"	2(15)-4B-3(6)-2(7)-6(18)-1(6)-4B-1(10)-3(18)	9"
	B5 N	3'-0"	57'-3"	28'-7 1/2"	12'-9"	6'-4 1/2"	15'-3"	4	56'-9"	3	26'-0"	—	—	3	26'-0"	4	56'-9"	2	41'-0"	40	160	6"	2(15)-4B-4(6)-6(18)-1(9)-4B-1(7 1/2)-3(18)	9"
	B6 N	3'-0"	57'-6"	28'-9"	12'-10"	6'-5"	13'-9"	4	57'-0"	3	26'-0"	—	—	3	26'-0"	4	57'-0"	2	41'-0"	40	160	6"	2(15)-4B-4(6)-6(18)-1(10)-4B-1(8)-3(18)	9"
	B7 N	3'-0"	57'-0"	28'-6"	12'-8"	6'-4"	17'-9"	4	56'-6"	3	26'-0"	—	—	3	26'-0"	4	56'-6"	2	40'-0"	40	160	6"	2(15)-4B-4(6)-6(18)-1(8)-4B-1(7)-3(18)	9"
C	B5 S	3'-0"	57'-11"	43'-11 1/2"	12'-7"	6'-3 1/2"	14'-6"	4 4	57'-0" 33'-6"	3	27'-6"	—	—	3	58'-0"	4 4	32'-0"* 31'-6" *	1	58'-0"	73	292	6"	2(15)-4B-2(8)-3(9)-4(18)-4(6)-4B-4(6)-4(18)-3(9)-2(8)-4B-1(7 1/2)-1(8)-3(18)	0
D	B6 S	3'-0"	74'-0"	37'-0"	13'-0"	—	14'-6"	4 4	43'-6"* 30'-0"	3	43'-6"	—	—	3	27'-0"	4 4	32'-6"* 21'-0" *	2	59'-0"	58	232	6"	2(15)-4B-2(6)-6(18)-4(6)-4B-3(6)-6(18)-3(6)	24"
	B7 S	3'-0"	61'-0"	30'-6"	9'-9"	—	15'-6"	4 4	36'-6"* 26'-0"*	2	36'-0"	—	—	2	26'-0"	4 4	43'-0"* 17'-6"*	—	—	42	168	6"	2(15)-4B-2(8 1/2)-4(18)-2(9)-4B-2(7 1/2)-4(18)-2(9)	24"

* These bars shall not be lapped, but shall butt against each other. Alternate the long and short bars.

Note: For Key Plan and General Notes see Sheet 3-1

CITY OF CHICAGO
DEPARTMENT OF SUBWAYS AND SUPERHIGHWAYS
WEST ROUTE SUPERHIGHWAY
SECTION 2424.23-B
HALSTED STREET INTERCHANGE
ROADWAY STRUCTURES
CONCRETE BENTS
REINFORCEMENT AND DETAILS

SCALE: AS NOTED — DECEMBER 1952
SHEET NO. 3-4 OF 32 SHEETS

AECOM

USER NAME = floresg	DESIGNED -	REVISED
	CHECKED -	REVISED
PLOT SCALE = N.T.S.	DRAWN -	REVISED
PLOT DATE = 5/5/2017	DATE - 5/10/2017	REVISED

STATE OF ILLINOIS
DEPARTMENT OF TRANSPORTATION

EXISTING PLANS
STRUCTURE NO. 016-1029
SHEET NO. 6 OF 19 SHEETS

F.A.I. RTE.	SECTION	COUNTY	TOTAL SHEETS	SHEET NO.
90/94/290	2014-001 R&B	COOK	696	279
		CONTRACT NO. 60X75		
		ILLINOIS FED. AID PROJECT		

0161704-60X75-EXT-06.dgn

FOR INFORMATION ONLY

ROUTE NO.	SECTION	COUNTY	TOTAL SHEETS	SHEET NO.
F.A. 131	2424.23-B	COOK	32	17
FED. ROAD DIST. NO. 6	RAILROAD		PROJECT U1 661 (57)	

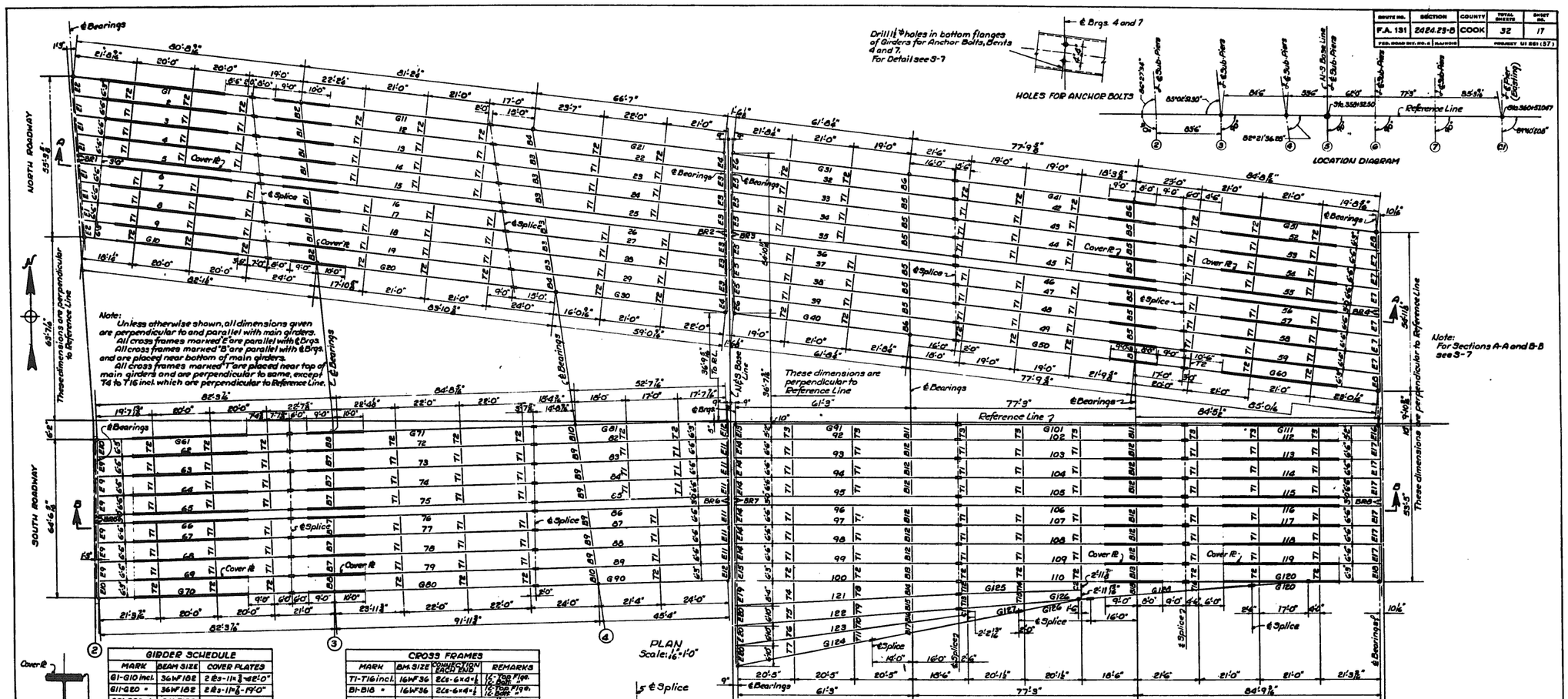

GIRDER SCHEDULE		
MARK	BEAM SIZE	COVER PLATES
G1-G10 incl.	36WF182	2 Pls-1 1/4"×44"-0"
G11-G20 *	36WF182	2 Pls-1 1/2"-19'-0"
G21-G30 *	36WF182	——
G31-G60 *	36WF182	——
G61-G50 *	36WF182	2 Pls-1 1/2"-17'-0"
G61-G60 *	36WF182	2 Pls-1 1/2"-46'-0"
G61-G70 *	36WF194	2 Pls-1 1/2"-46'-0"
G71-G80 *	36WF194	2 Pls-1 1/2"-19'-0"
G81-G90 *	36WF194	——
G91-G100 *	36WF182	——
G101-G110 *	36WF182	2 Pls-1 1/2"-17'-0"
G111-G120 *	36WF182	2 Pls-1 1/2"-46'-0"
G121-G128 *	36WF182	——

CROSS FRAMES			
MARK	BM SIZE	CONNECTION EACH END	REMARKS
T1-T16 incl.	16WF36	2 Ls-6×4×½	1/2" Top Flge.
B1-B18 *	16WF36	2 Ls-6×4×½	1/2" Top Flge. 1/2" Bott. "
E1-E20 *	12WF40	2 Ls-6×4×½ or 2-½" Ex (Bent)	
C1 & C2	30WF108	2 Ls-4×3×½ or 2-½" Ex (Bent)	
BR1-BR8 incl.	16WF64	See Detail	

* Cantilever Beam

Provide 6×4×½ shelf Ls for Girders G3, G6, G15, G16, G23, G26, G33, G36, G43, G46, G53, G56, G63, G66, G73, G76, G83, G86, G93, G96, G105, G106, G115 and G116. See detail below.

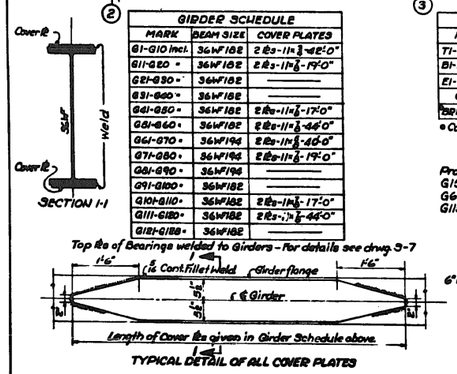

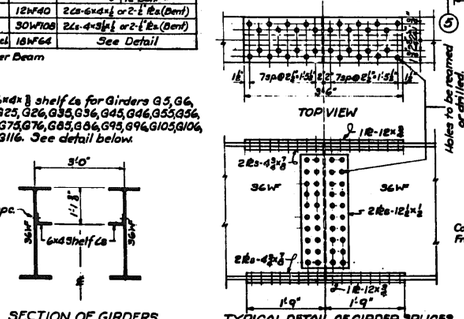

For location of bent splices see S-7
Vertical angles between adjacent girders to be determined from elevations shown on S-6

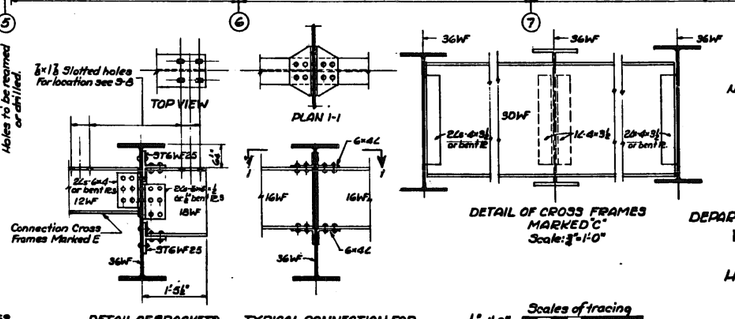

Note: For Key Plan and General Notes see Sheet S-1

Scales of tracing
1/16" = 1'-0"
3/8" = 1'-0"

CITY OF CHICAGO
DEPARTMENT OF SUBWAYS AND SUPERHIGHWAYS
WEST ROUTE SUPERHIGHWAY
SECTION 2424.23-B
HALSTED STREET INTERCHANGE
ROADWAY STRUCTURES
STRUCTURAL STEEL
FRAMING PLAN

SCALE: AS NOTED — DECEMBER 1952
SHEET NO. S-6 OF 32 SHEETS

DESIGNED BY P. Solheim
DRAWN BY W. Wood
CHECKED BY
APPROVED BY

FOR INFORMATION ONLY

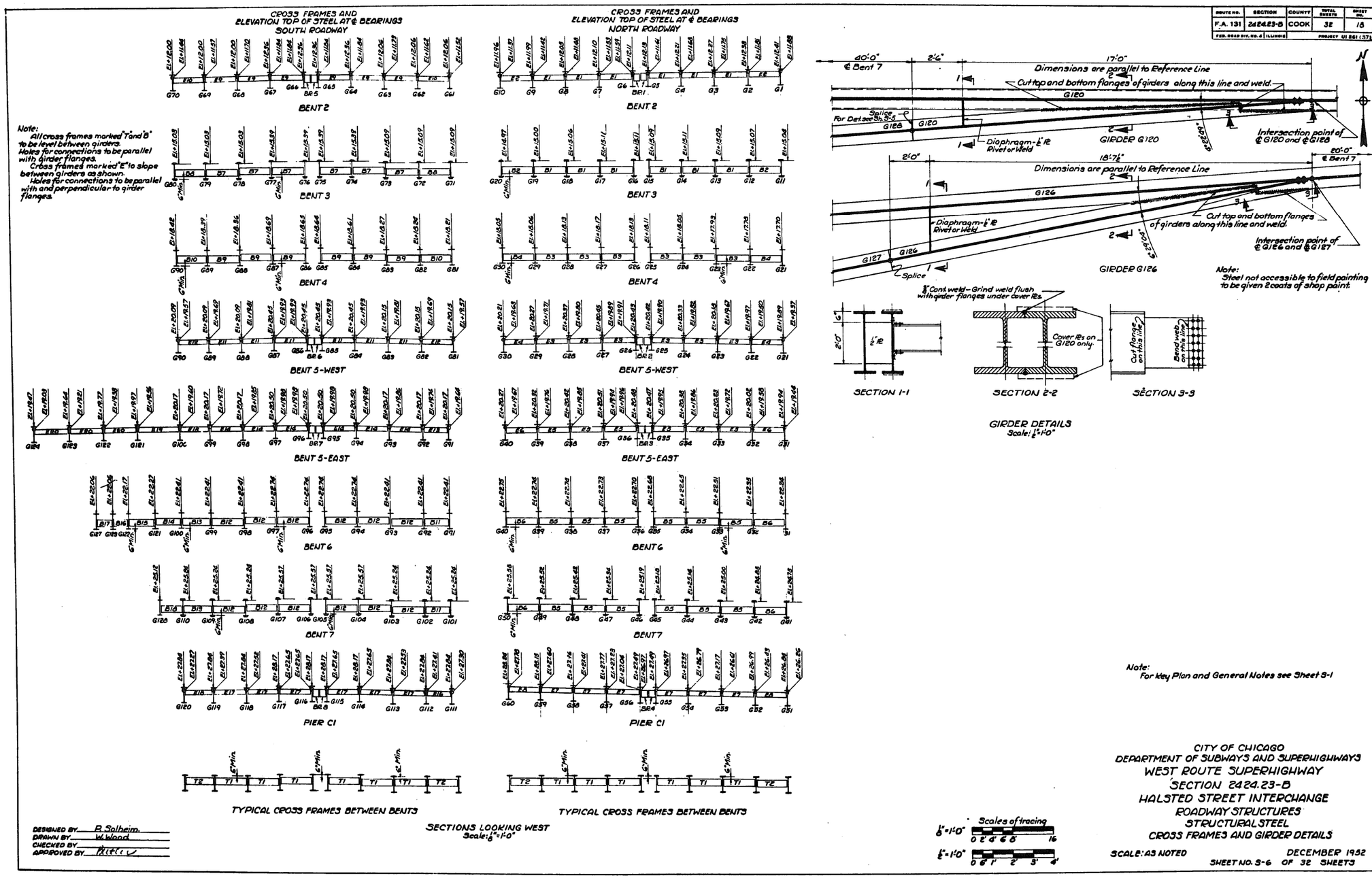

ROUTE NO.	SECTION	COUNTY	TOTAL SHEETS	SHEET NO.
F.A. 131	2424.23-B	COOK	32	18

FED. ROAD DIV. NO. 4 | ILLINOIS | PROJECT UI 261 (37)

AECOM

USER NAME = floresg	DESIGNED -	REVISED
	CHECKED -	REVISED
PLOT SCALE = N.T.S.	DRAWN -	REVISED
PLOT DATE = 5/5/2017	DATE - 5/10/2017	REVISED

STATE OF ILLINOIS
DEPARTMENT OF TRANSPORTATION

EXISTING PLANS
STRUCTURE NO. 016-1029
SHEET NO. 8 OF 19 SHEETS

F.A.I. RTE.	SECTION	COUNTY	TOTAL SHEETS	SHEET NO.
90/94/290	2014-001 R&B	COOK	696	281

CONTRACT NO. 60X75
ILLINOIS FED. AID PROJECT

0161704-60X75-EXT-08.dgn

FOR INFORMATION ONLY

ROUTE NO.	SECTION	COUNTY	TOTAL SHEETS	SHEET NO.
F.A. 131	2424.23-B	COOK	32	19
FED. ROAD DIV. NO. 6 ILLINOIS			PROJECT UI 281 (37)	

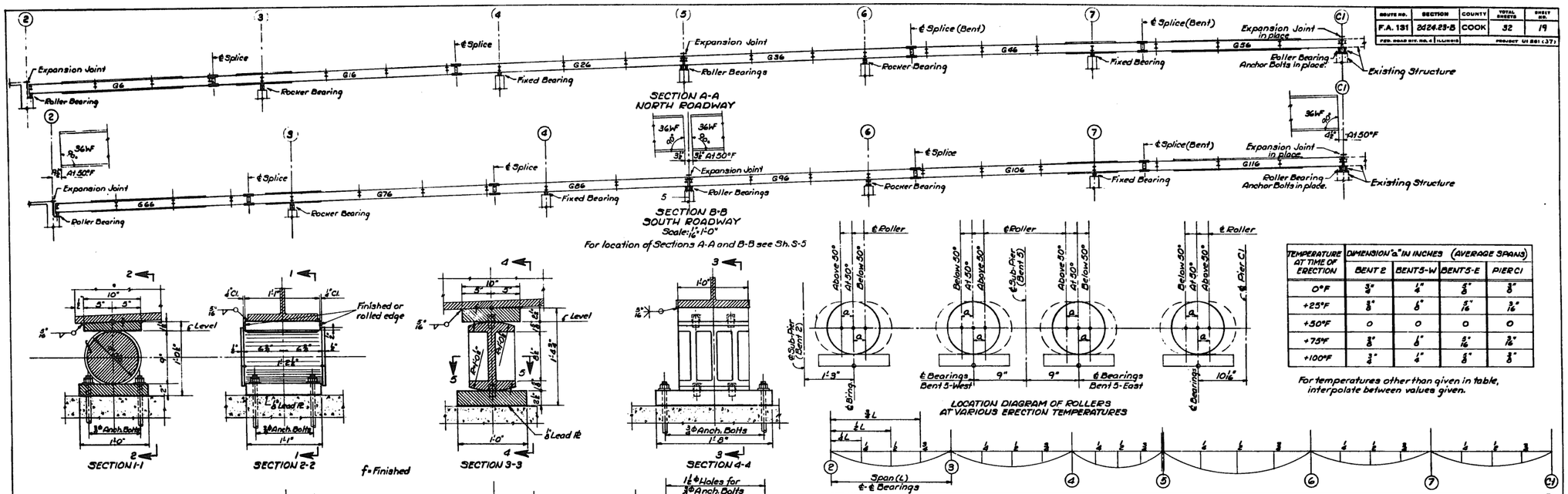

TEMPERATURE AT TIME OF ERECTION	DIMENSION "a" IN INCHES (AVERAGE SPANS)			
	BENT 2	BENT 5-W	BENT 5-E	PIER C1
0°F	3/8"	1/4"	5/8"	3/8"
+25°F	3/8"	0	5/16"	3/16"
+50°F	0	0	0	0
+75°F	3/8"	1/8"	5/16"	3/16"
+100°F	3/8"	1/4"	5/8"	3/8"

For temperatures other than given in table, interpolate between values given.

SPAN	GIRDER	POINT 1/4	POINT 1/2	POINT 3/4
2-3	G1℄G10	5/16"	1 7/16"	5/8"
	G2-G9 incl.	13/16"	1"	9/16"
3-4	G11℄G12	1/8"	3/8"	1/4"
	G13℄G14	1/8"	7/16"	1/4"
	G15, G16 G17℄G18	3/16	1/2	5/16
	G19	1/4"	9/16"	3/8"
	G20	1/4"	11/16"	7/16"
4-5	G21	3/16"	3/8"	5/8"
	G22℄G23	5/16"	9/16"	1/2"
	G24, G25 ℄G26	1/4"	1/2"	7/16"
	G27	3/16"	7/16"	3/8"
	G28	3/16"	3/8"	5/16"
	G29℄G30	1/8"	5/16"	1/4"
5-6	G31℄G40	7/16"	1/2"	1/4"
	G32-G39 inc.	3/8"	7/16"	1/4"
6-7	G41℄G50	7/16"	1/4"	—
	G42-G49 inc.	1/8"	7/16"	—
7-C1	G51℄G60	3/8"	1 1/16"	1/16"
	G52-G59 inc.	5/8"	1/16"	1/8"

NORTH ROADWAY
DEAD LOAD DEFLECTION OF GIRDERS

SPAN	GIRDER	POINT 1/4	POINT 1/2	POINT 3/4
2-3	G61	15/16"	1/2"	9/16
	G62-G66 inc.	3/8"	15/16"	1/2"
	G67, G68 ℄G69	3/8"	13/16	7/16
	G70	3/8"	1"	1/2"
3-4	G71℄G72	5/16	3/8"	1/2"
	G73℄G74	3/8"	13/16	9/16
	G75, G76 ℄ G77	7/16	7/8	5/8
	G78	1/2"	1"	11/16"
	G79	9/16	1 1/16"	3/4"
	G80	11/16"	1 3/16"	7/8"
4-5	G81℄G82	—	1/8"	1/8"
	G83	—	1/16"	1/8"
	G84, G85 ℄G86	—	1/16"	1/16"
	G87, G88 ℄G89	(-)1/16"	—	—
	G90	(-)1/8"	(-)1/16"	—
5-6	G91	7/16	9/16	5/16
	G92-G99 inc.	3/8"	7/16	1/4
	G100	1/2"	11/16"	3/8"
	G101℄G124	1/2"	5/8	5/16
	G122	3/16	3/16	1/16"
	G123	3/8"	7/16	1/8"
6-7	G101	3/16	1/8"	—
	G102-G109 incl.	1/8	3/16	—
	G110	1/8"	1/4"	1/8"
	G125	3/16	3/8"	3/16
	G126	1/4"	1/2"	1/4"
	G127	1/8"	1/2"	—
7-C1	G111℄G120	13/16	1 7/16	1/8"
	G112-G119 inc.	5/8"	1 1/8"	3/8"
	G128	13/16"	1 7/16"	—

(-) Indicates upward deflection.

SOUTH ROADWAY
DEAD LOAD DEFLECTION OF GIRDERS

Note:
For Key Plan and General Notes see Sheet S-1

Scales of tracing
1/16" = 1'-0"
1/2" = 1'-0"

CITY OF CHICAGO
DEPARTMENT OF SUBWAYS AND SUPERHIGHWAYS
WEST ROUTE SUPERHIGHWAY
SECTION 2424.23-B
HALSTED STREET INTERCHANGE
ROADWAY STRUCTURES
STRUCTURAL STEEL
GIRDER BEARINGS AND DEAD LOAD DEFLECTIONS

SCALE: AS NOTED
DECEMBER 1952
SHEET NO. S-7 OF 32 SHEETS

0161704-60X75-EXT-09.dgn

AECOM

USER NAME = floresg	DESIGNED -	REVISED
	CHECKED -	REVISED
PLOT SCALE = N.T.S.	DRAWN -	REVISED
PLOT DATE = 5/5/2017	DATE - 5/10/2017	REVISED

STATE OF ILLINOIS
DEPARTMENT OF TRANSPORTATION

EXISTING PLANS
STRUCTURE NO. 016-1029
SHEET NO. 9 OF 19 SHEETS

F.A.I. RTE.	SECTION	COUNTY	TOTAL SHEETS	SHEET NO.
90/94/290	2014-001 R&B	COOK	696	282
		CONTRACT NO. 60X75		
		ILLINOIS FED. AID PROJECT		

FOR INFORMATION ONLY

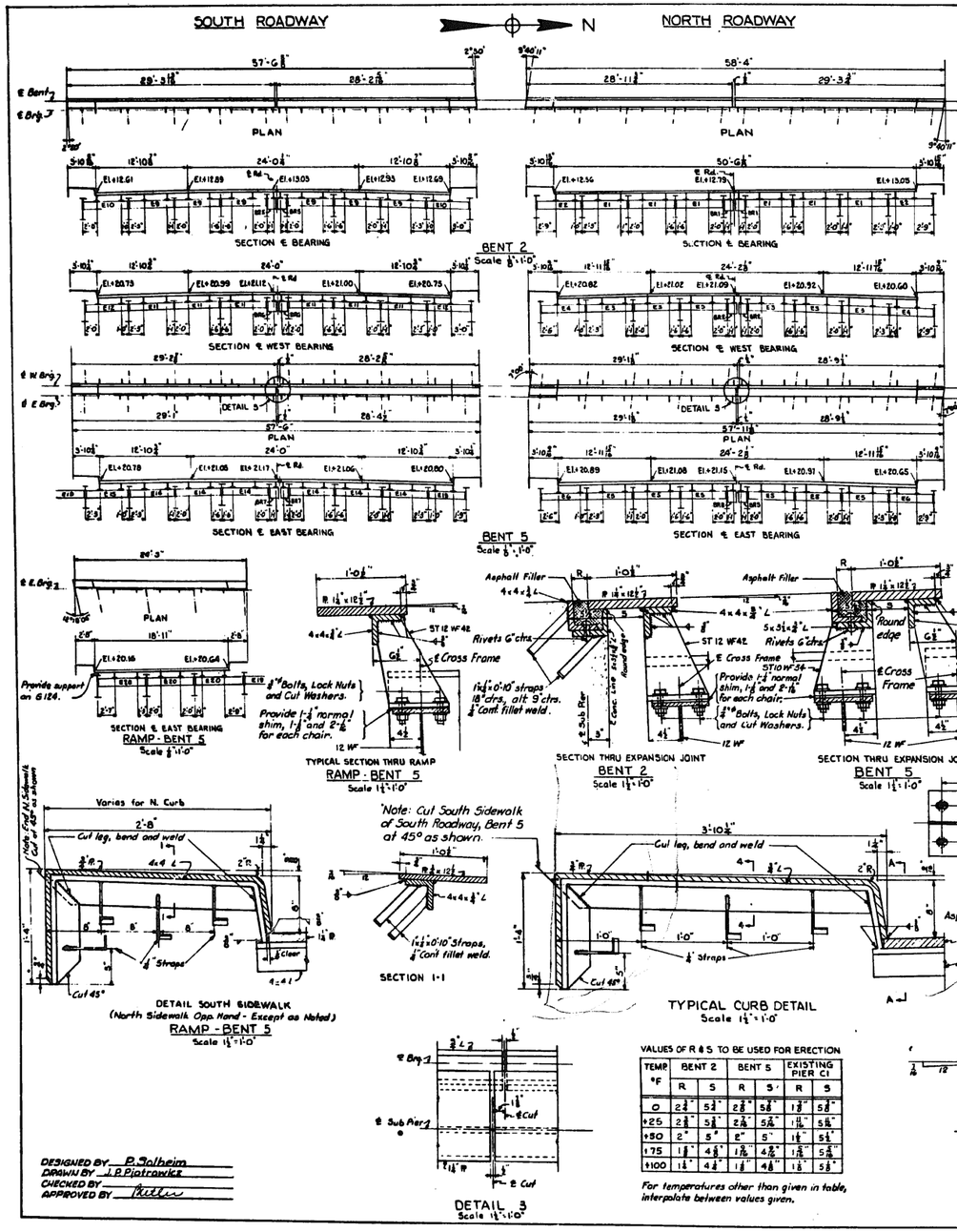

TEMP °F	BENT 2 R	BENT 2 S	BENT 5 R	BENT 5 S	EXISTING PIER C1 R	EXISTING PIER C1 S
0	2 3/4"	5 3/4"	2 7/8"	5 7/8"	1 7/8"	5 7/8"
+25	2 3/8"	5 3/8"	2 7/16"	5 7/16"	1 11/16"	5 11/16"
+50	2"	5"	2"	5"	1 1/2"	5 1/2"
+75	1 5/8"	4 5/8"	1 9/16"	4 9/16"	1 5/16"	5 5/16"
+100	1 1/4"	4 1/4"	1 1/8"	4 1/8"	1 1/8"	5 1/8"

For temperatures other than given in table, interpolate between values given.

DESIGNED BY P. Solheim
DRAWN BY J.P. Piotrowicz
CHECKED BY
APPROVED BY

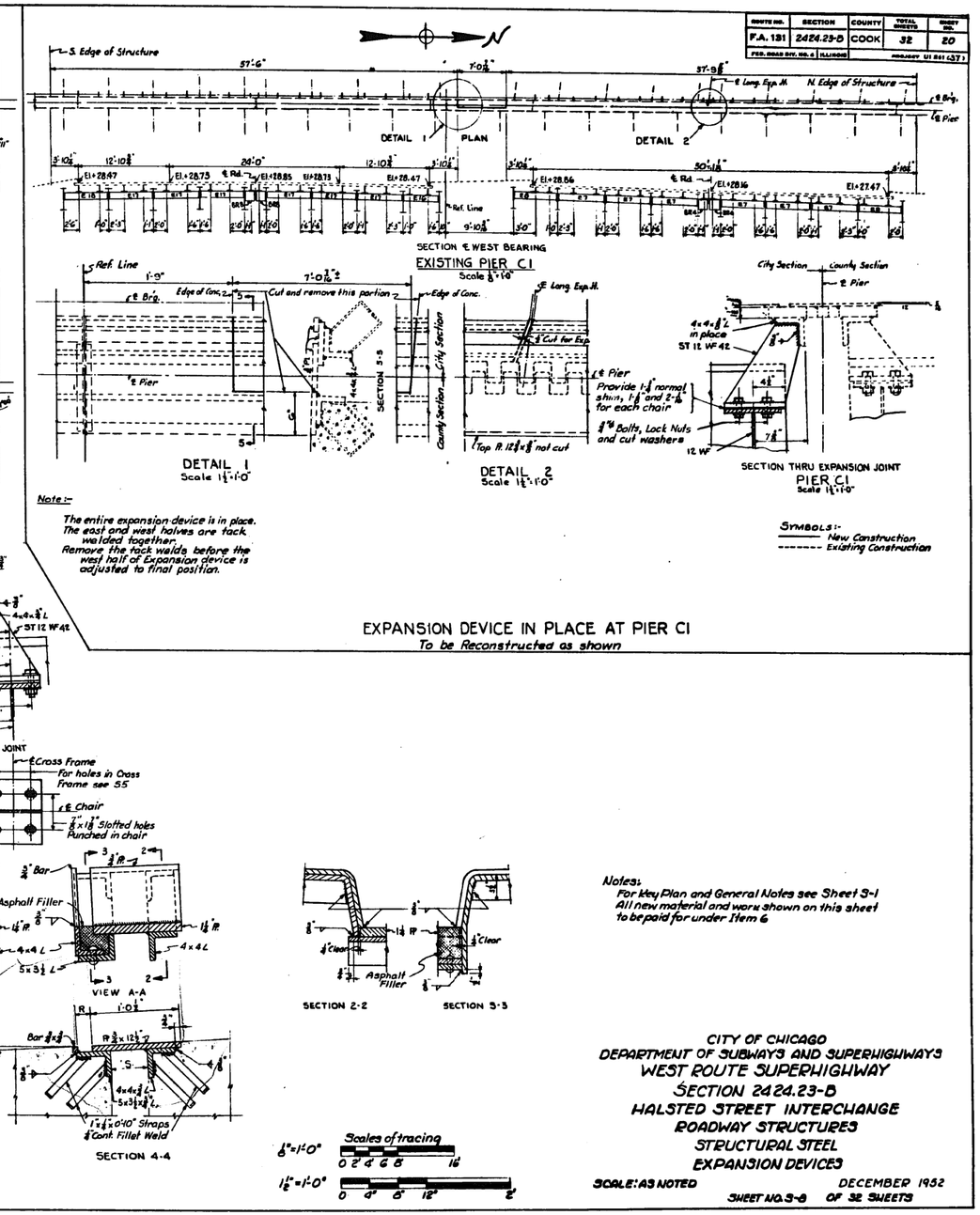

ROUTE NO.	SECTION	COUNTY	TOTAL SHEETS	SHEET NO.
F.A. 131	2424.23-B	COOK	32	20

FED. ROAD DIV. NO. 6 ILLINOIS PROJECT U1 241 (37)

CITY OF CHICAGO
DEPARTMENT OF SUBWAYS AND SUPERHIGHWAYS
WEST ROUTE SUPERHIGHWAY
SECTION 2424.23-B
HALSTED STREET INTERCHANGE
ROADWAY STRUCTURES
STRUCTURAL STEEL
EXPANSION DEVICES

SCALE: AS NOTED DECEMBER 1952
SHEET NO. S-8 OF 32 SHEETS

0161704-60X75-EXT-10.dgn

AECOM

USER NAME = floresg	DESIGNED -	REVISED
	CHECKED -	REVISED
PLOT SCALE = N.T.S.	DRAWN -	REVISED
PLOT DATE = 5/5/2017	DATE - 5/10/2017	REVISED

STATE OF ILLINOIS
DEPARTMENT OF TRANSPORTATION

EXISTING PLANS
STRUCTURE NO. 016-1029
SHEET NO. 10 OF 19 SHEETS

F.A.I. RTE.	SECTION	COUNTY	TOTAL SHEETS	SHEET NO.
90/94/290	2014-001 R&B	COOK	696	283

CONTRACT NO. 60X75
ILLINOIS FED. AID PROJECT

FOR INFORMATION ONLY

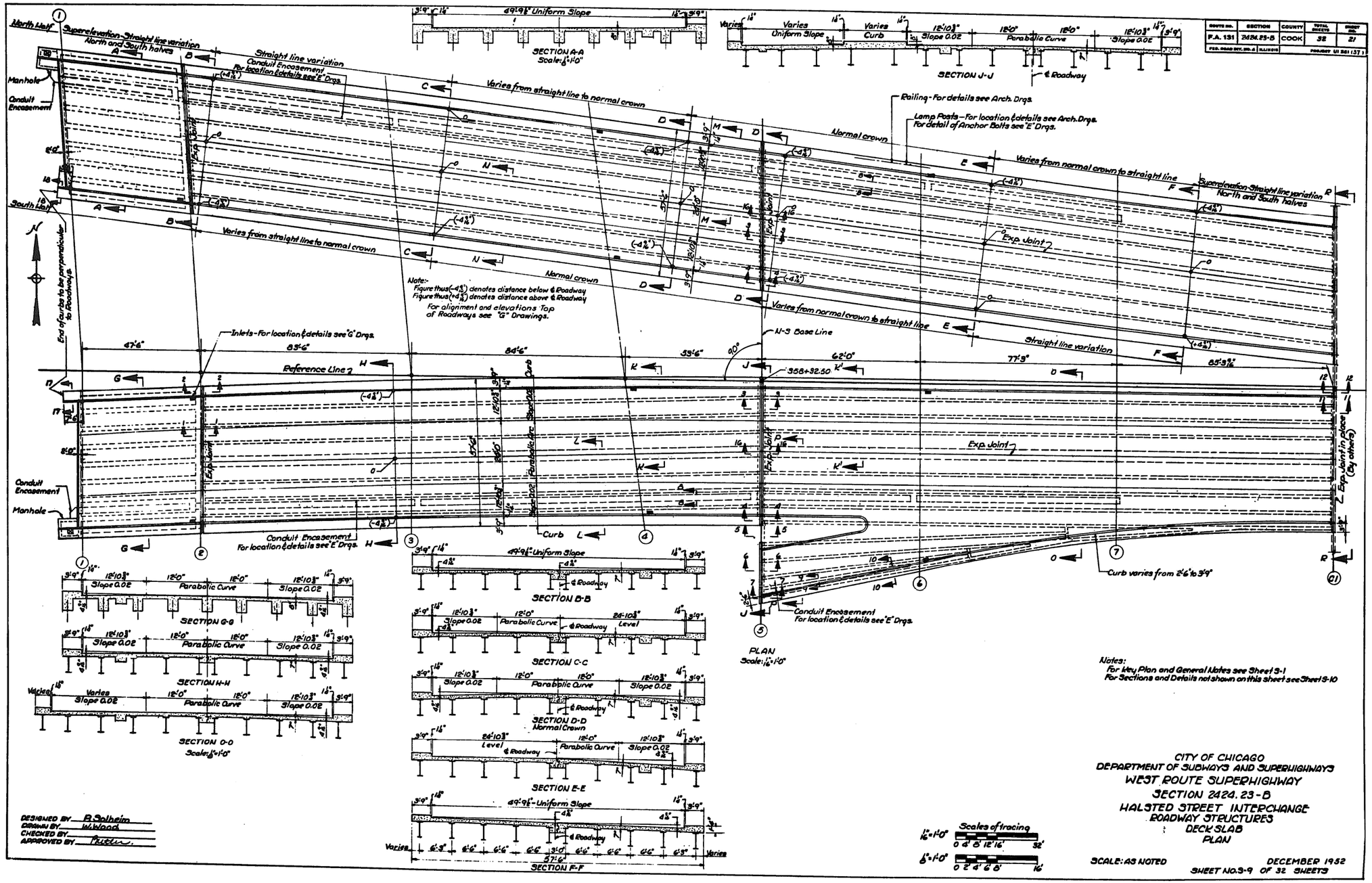

AECOM	USER NAME = floresg	DESIGNED -	REVISED	STATE OF ILLINOIS DEPARTMENT OF TRANSPORTATION	EXISTING PLANS STRUCTURE NO. 016-1029	F.A.I. RTE.	SECTION	COUNTY	TOTAL SHEETS	SHEET NO.
		CHECKED -	REVISED			90/94/290	2014-001 R&B	COOK	696	284
	PLOT SCALE = N.T.S.	DRAWN -	REVISED			CONTRACT NO. 60X75				
	PLOT DATE = 5/5/2017	DATE - 5/10/2017	REVISED		SHEET NO. 11 OF 19 SHEETS	ILLINOIS FED. AID PROJECT				

0161704-60X75-EXT-11.dgn

FOR INFORMATION ONLY

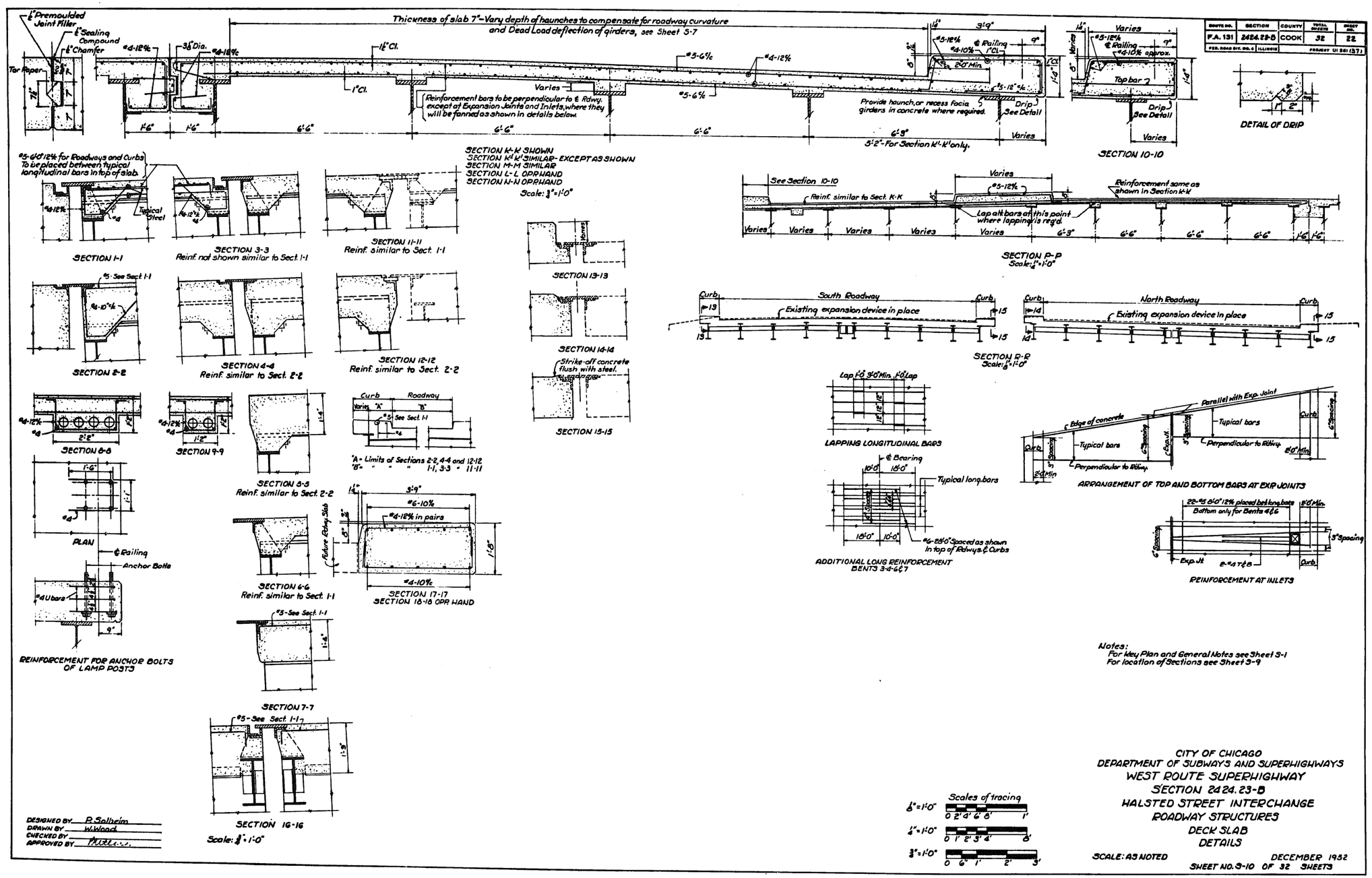

ROUTE NO.	SECTION	COUNTY	TOTAL SHEETS	SHEET NO.
F.A. 131	2424.23-B	COOK	32	22
FED. ROAD DIV. NO. 4	ILLINOIS	PROJECT U1 281 (57)		

Notes:
For Key Plan and General Notes see Sheet 3-1
For location of Sections see Sheet 3-9

CITY OF CHICAGO
DEPARTMENT OF SUBWAYS AND SUPERHIGHWAYS
WEST ROUTE SUPERHIGHWAY
SECTION 2424.23-B
HALSTED STREET INTERCHANGE
ROADWAY STRUCTURES
DECK SLAB
DETAILS

SCALE: AS NOTED
DECEMBER 1952
SHEET NO. 3-10 OF 32 SHEETS

AECOM

USER NAME = floresg	DESIGNED -	REVISED
	CHECKED -	REVISED
PLOT SCALE = N.T.S.	DRAWN -	REVISED
PLOT DATE = 5/5/2017	DATE - 5/10/2017	REVISED

STATE OF ILLINOIS
DEPARTMENT OF TRANSPORTATION

EXISTING PLANS
STRUCTURE NO. 016-1029
SHEET NO. 12 OF 19 SHEETS

F.A.I. RTE.	SECTION	COUNTY	TOTAL SHEETS	SHEET NO.
90/94/290	2014-001 R&B	COOK	696	285
		CONTRACT NO. 60X75		
		ILLINOIS FED. AID PROJECT		

0161704-60X75-EXT-12.dgn

FOR INFORMATION ONLY

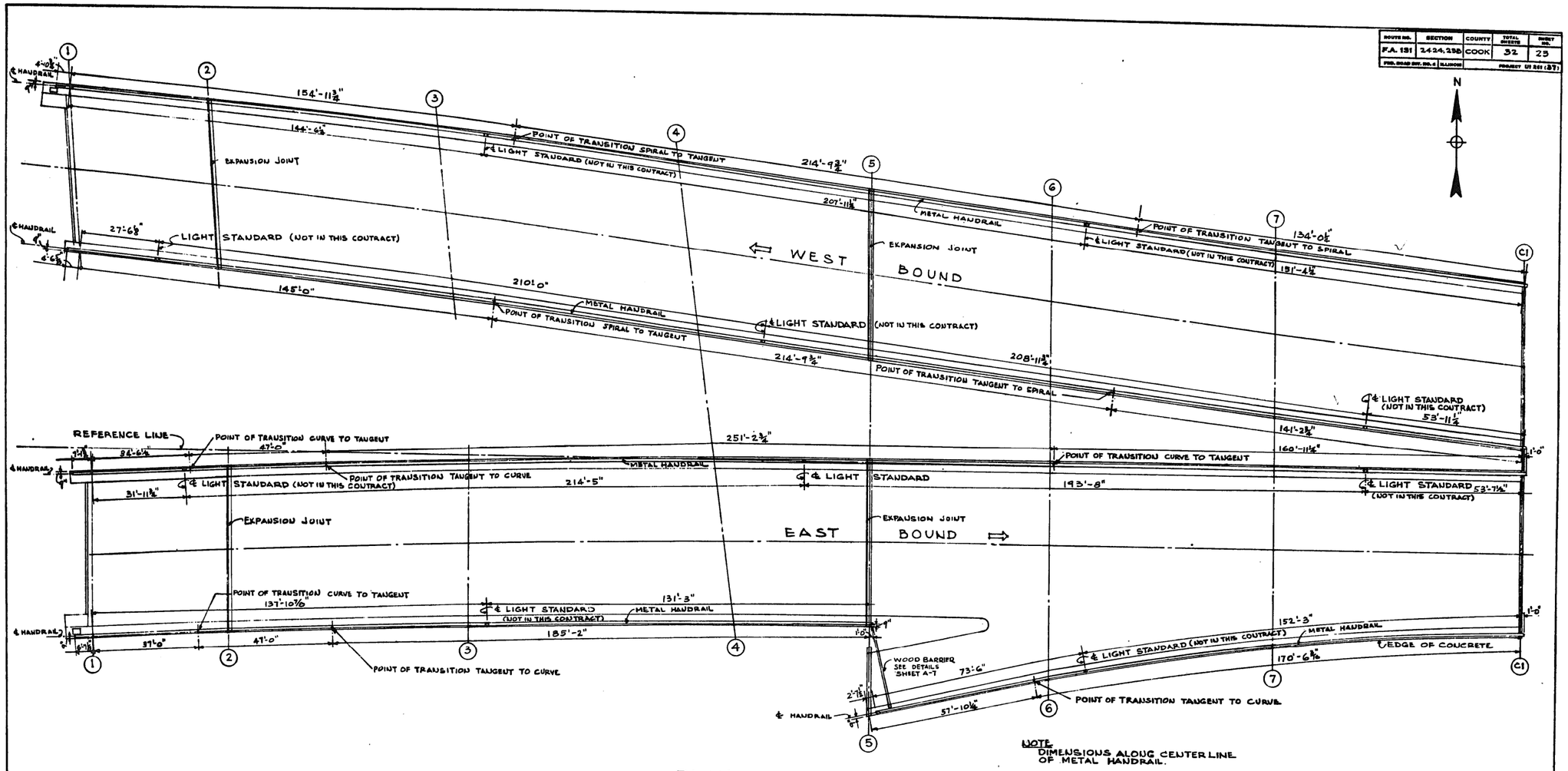

Drawn By J. GROSGUTH
Traced By
Checked By
Approved By
Subway Architect

CITY OF CHICAGO
DEPARTMENT OF SUBWAYS AND SUPERHIGHWAYS
WEST ROUTE SUPERHIGHWAY
SECTION 2424.23-B
HALSTED STREET INTERCHANGE
ROADWAY STRUCTURES
LOCATION PLAN OF RAILING

SCALE: AS NOTED
DECEMBER 1952
SHEET NO. A-1 OF 32 SHEETS

0161704-60X75-EXT-13.dgn

AECOM	USER NAME = floresg	DESIGNED -	REVISED	STATE OF ILLINOIS DEPARTMENT OF TRANSPORTATION	EXISTING PLANS STRUCTURE NO. 016-1029	F.A.I. RTE.	SECTION	COUNTY	TOTAL SHEETS	SHEET NO.
		CHECKED -	REVISED			90/94/290	2014-001 R&B	COOK	696	286
	PLOT SCALE = N.T.S.	DRAWN -	REVISED					CONTRACT NO. 60X75		
	PLOT DATE = 5/5/2017	DATE - 5/10/2017	REVISED		SHEET NO. 13 OF 19 SHEETS		ILLINOIS	FED. AID PROJECT		

FOR INFORMATION ONLY

ROUTE NO.	SECTION	COUNTY	TOTAL SHEETS	SHEET NO.
F.A. 131	2424.23B	COOK	32	24
FED. ROAD DIST. NO. 4	ILLINOIS		FOR/SCT 131 (37)	

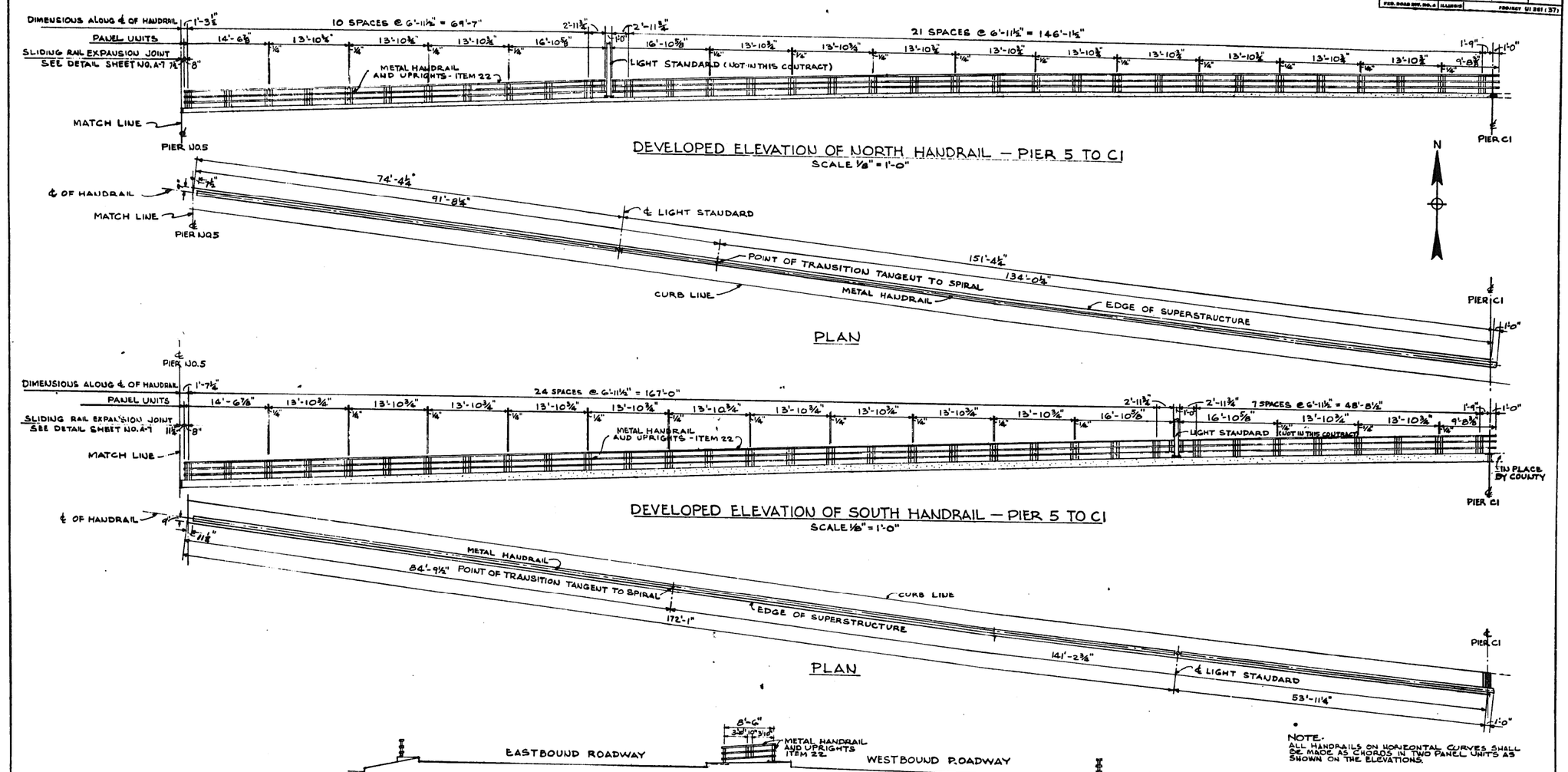

NOTE.
ALL HANDRAILS ON HORIZONTAL CURVES SHALL BE MADE AS CHORDS IN TWO PANEL UNITS AS SHOWN ON THE ELEVATIONS.

Drawn By V. GROSGUTH
Traced By
Checked By
Approved By
Subway Architect

SCALE OF TRACING
1/8" = 1'-0"
0 2' 4' 6' 8' 16'

CITY OF CHICAGO
DEPARTMENT OF SUBWAYS AND SUPERHIGHWAYS
WEST ROUTE SUPERHIGHWAY
SECTION 2424.23-B
HALSTED STREET INTERCHANGE
ROADWAY STRUCTURES
PLANS AND ELEVATIONS OF RAILING
WESTBOUND ROADWAY – PIERS 5 TO C1

SCALE: AS NOTED DECEMBER **1952**
SHEET NO. A-2 OF 32 SHEETS

0161704-60X75-EXT-14.dgn

AECOM

USER NAME = floresg	DESIGNED -	REVISED
	CHECKED -	REVISED
PLOT SCALE = N.T.S.	DRAWN -	REVISED
PLOT DATE = 5/5/2017	DATE - 5/10/2017	REVISED

STATE OF ILLINOIS
DEPARTMENT OF TRANSPORTATION

EXISTING PLANS
STRUCTURE NO. 016-1029
SHEET NO. 14 OF 19 SHEETS

F.A.I. RTE.	SECTION	COUNTY	TOTAL SHEETS	SHEET NO.
90/94/290	2014-001 R&B	COOK	696	287
		CONTRACT NO. 60X75		
		ILLINOIS FED. AID PROJECT		

FOR INFORMATION ONLY

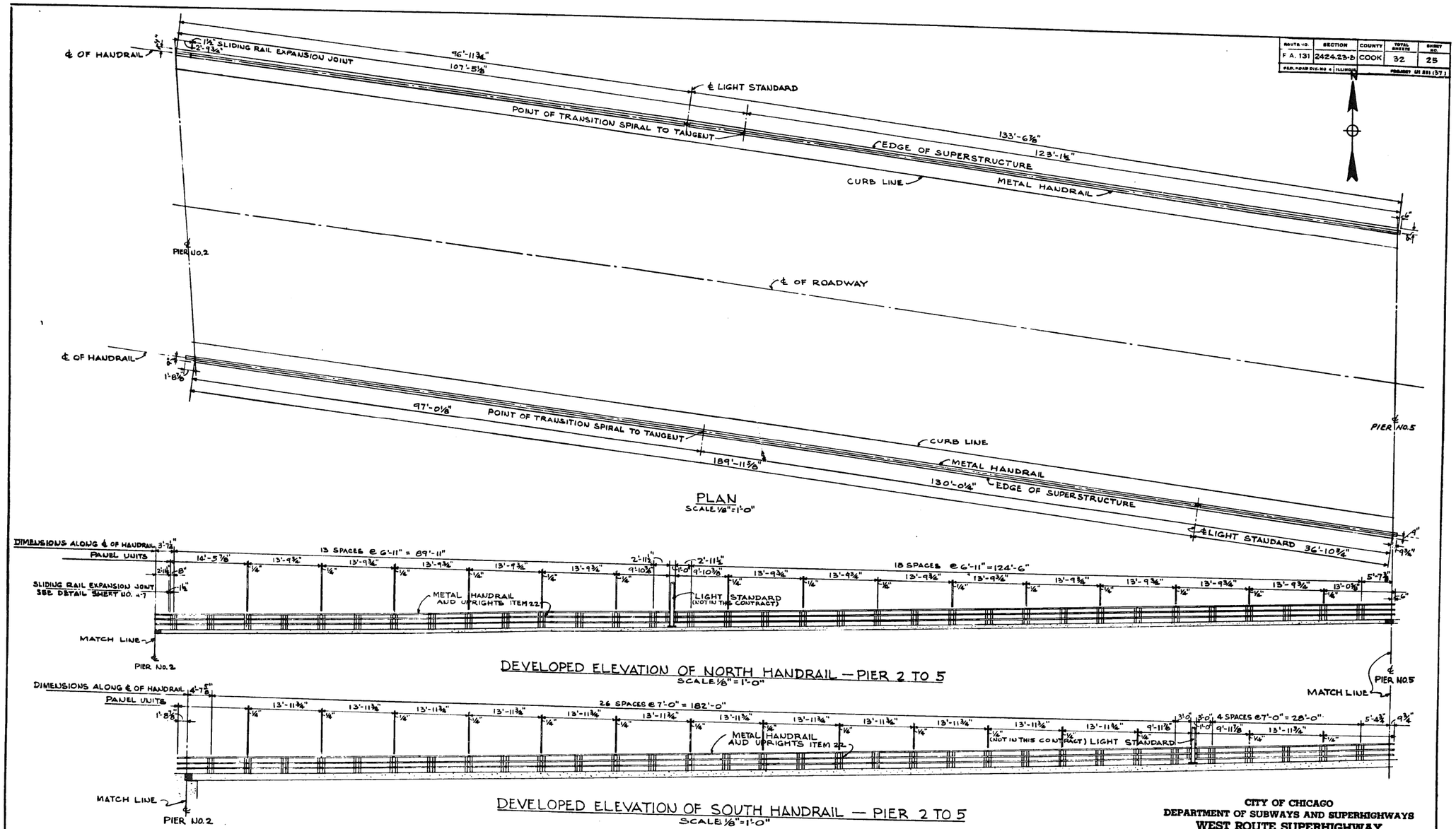

ROUTE NO.	SECTION	COUNTY	TOTAL SHEETS	SHEET NO.
F.A. 131	2424.23-B	COOK	32	25

FED. ROAD DIV. NO. 4 ILLINOIS — PROJECT U1 251 (37)

Drawn By J. GROSGUTH
Traced By
Checked By
Approved By M. J. Fluden
Subway Architect

NOTE:
ALL HANDRAILS ON HORIZONTAL CURVES SHALL BE MADE AS CHORDS IN TWO PANEL UNITS AS SHOWN ON ELEVATIONS

SCALE OF TRACING
⅛" = 1'-0"
0' 2' 4' 6' 8' 16'

CITY OF CHICAGO
DEPARTMENT OF SUBWAYS AND SUPERHIGHWAYS
WEST ROUTE SUPERHIGHWAY
SECTION 2424.23-B
HALSTED STREET INTERCHANGE
ROADWAY STRUCTURES
PLAN AND ELEVATIONS OF RAILING
WESTBOUND ROADWAY — PIERS 2 TO 5
SCALE: AS NOTED
DECEMBER 1952
SHEET NO. A-3 OF 32 SHEETS

0161704-60X75-EXT-15.dgn

AECOM

USER NAME = floresg	DESIGNED -	REVISED	
	CHECKED -	REVISED	
PLOT SCALE = N.T.S.	DRAWN -	REVISED	
PLOT DATE = 5/5/2017	DATE - 5/10/2017	REVISED	

STATE OF ILLINOIS
DEPARTMENT OF TRANSPORTATION

EXISTING PLANS
STRUCTURE NO. 016-1029
SHEET NO. 15 OF 19 SHEETS

F.A.I. RTE.	SECTION	COUNTY	TOTAL SHEETS	SHEET NO.
90/94/290	2014-001 R&B	COOK	696	288
		CONTRACT NO. 60X75		
		ILLINOIS FED. AID PROJECT		

FOR INFORMATION ONLY

ROUTE NO.	SECTION	COUNTY	TOTAL SHEETS	SHEET NO.
F.A. 131	2424.23B	COOK	32	26
FED. ROAD DIST. NO. 4	ILLINOIS		PROJECT U1881(37)	

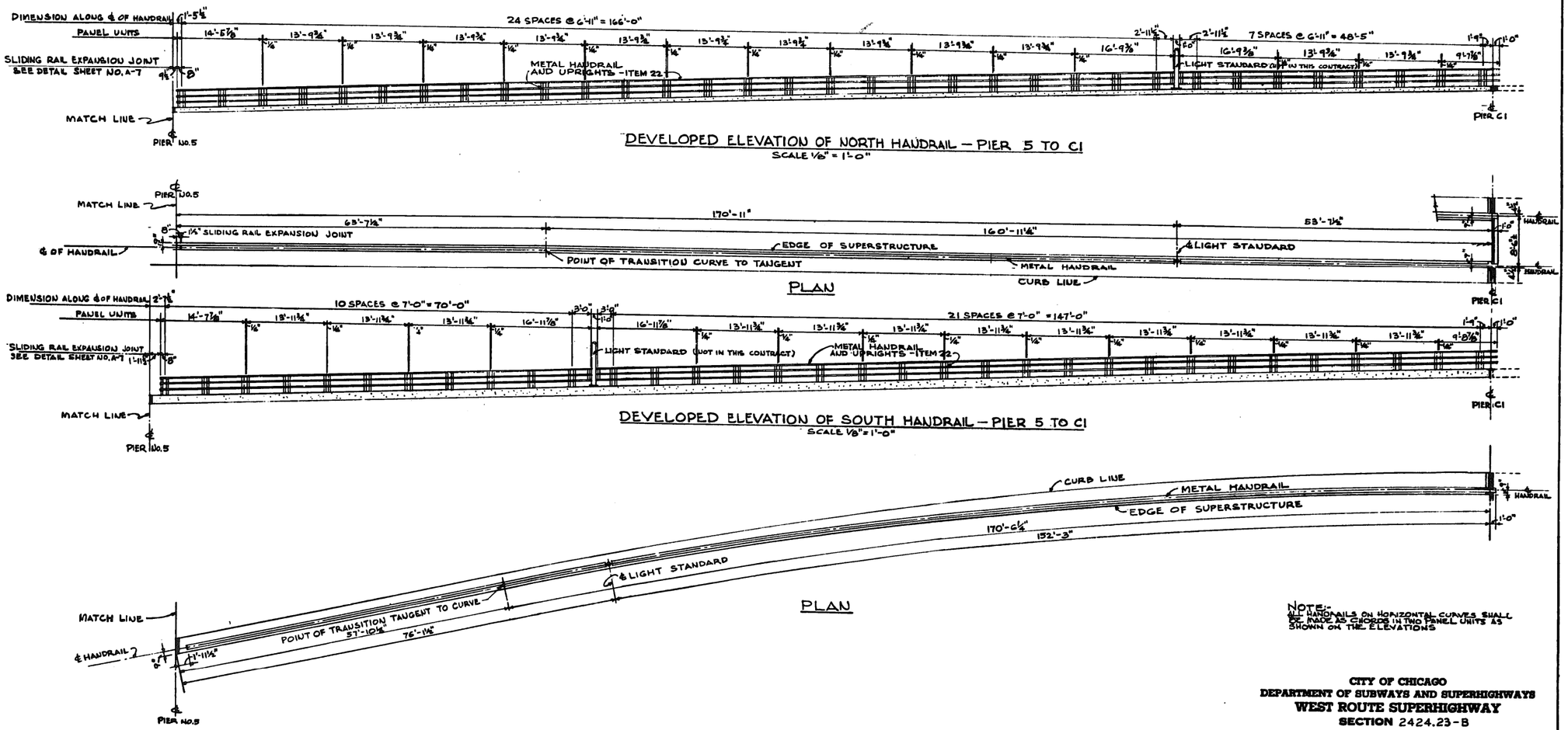

NOTE:
ALL HANDRAILS ON HORIZONTAL CURVES SHALL BE MADE AS CHORDS IN TWO PANEL UNITS AS SHOWN ON THE ELEVATIONS

Drawn By J. GROSGUTH
Traced By
Checked By
Approved By
Subway Architect

SCALE OF TRACING
1/8" = 1'-0"

CITY OF CHICAGO
DEPARTMENT OF SUBWAYS AND SUPERHIGHWAYS
WEST ROUTE SUPERHIGHWAY
SECTION 2424.23-B
HALSTED STREET INTERCHANGE
ROADWAY STRUCTURES
PLANS AND ELEVATIONS OF RAILING
EASTBOUND ROADWAY - PIERS 5 TO C1

SCALE: AS NOTED
DECEMBER 1952
SHEET NO. A-4 OF 32 SHEETS

AECOM

USER NAME = floresg	DESIGNED -	REVISED
	CHECKED -	REVISED
PLOT SCALE = N.T.S.	DRAWN -	REVISED
PLOT DATE = 5/5/2017	DATE - 5/10/2017	REVISED

STATE OF ILLINOIS
DEPARTMENT OF TRANSPORTATION

EXISTING PLANS
STRUCTURE NO. 016-1029
SHEET NO. 16 OF 19 SHEETS

F.A.I. RTE.	SECTION	COUNTY	TOTAL SHEETS	SHEET NO.
90/94/290	2014-001 R&B	COOK	696	289
		CONTRACT NO. 60X75		
		ILLINOIS FED. AID PROJECT		

0161704-60X75-EXT-16.dgn

FOR INFORMATION ONLY

ROUTE NO.	SECTION	COUNTY	TOTAL SHEETS	SHEET NO.
F.A. 131	2424.23B	COOK	32	27
FED. ROAD DIST. NO. 4	ILLINOIS		PROJECT	

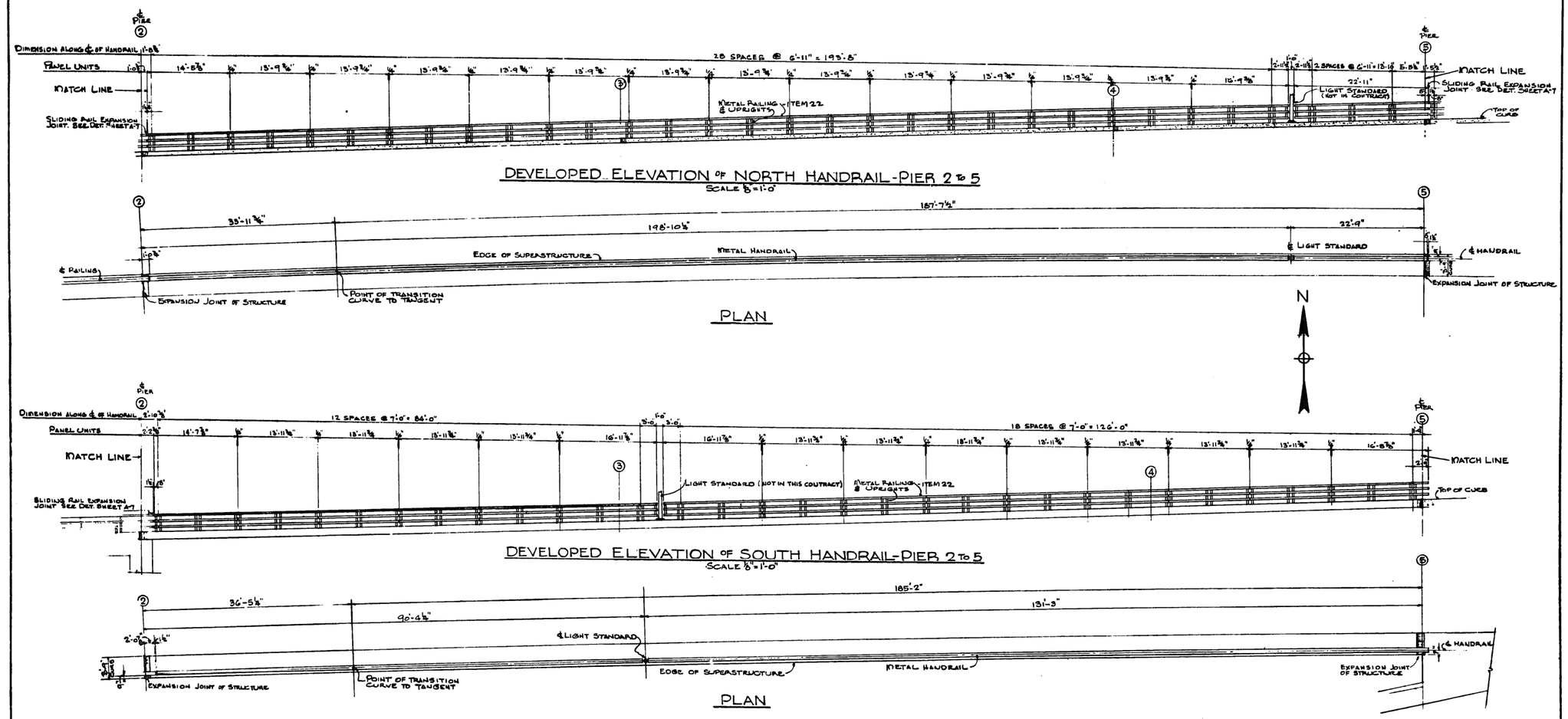

NOTE:
ALL HANDRAILS ON HORIZONTAL CURVES SHALL BE MADE AS CHORDS IN TWO PANEL UNITS AS SHOWN ON THE ELEVATIONS

Drawn By ROAT D. CHIDESTER
Traced By
Checked By
Approved By
Subway Architect

SCALE OF TRACING
⅛"=1'-0"

CITY OF CHICAGO
DEPARTMENT OF SUBWAYS AND SUPERHIGHWAYS
WEST ROUTE SUPERHIGHWAY
SECTION 2424.23-B
HALSTED STREET INTERCHANGE
ROADWAY STRUCTURES
PLANS AND ELEVATIONS OF RAILING
EASTBOUND ROADWAY - PIERS 2 TO 5

SCALE: AS NOTED DECEMBER **1952**
SHEET NO. A-5 OF 32 SHEETS

0161704-60X75-EXT-17.dgn

AECOM

USER NAME = floresg	DESIGNED -	REVISED
	CHECKED -	REVISED
PLOT SCALE = N.T.S.	DRAWN -	REVISED
PLOT DATE = 5/5/2017	DATE - 5/10/2017	REVISED

STATE OF ILLINOIS
DEPARTMENT OF TRANSPORTATION

EXISTING PLANS
STRUCTURE NO. 016-1029
SHEET NO. 17 OF 19 SHEETS

F.A.I. RTE.	SECTION	COUNTY	TOTAL SHEETS	SHEET NO.
90/94/290	2014-001 R&B	COOK	696	290
		CONTRACT NO. 60X75		
		ILLINOIS FED. AID PROJECT		

FOR INFORMATION ONLY

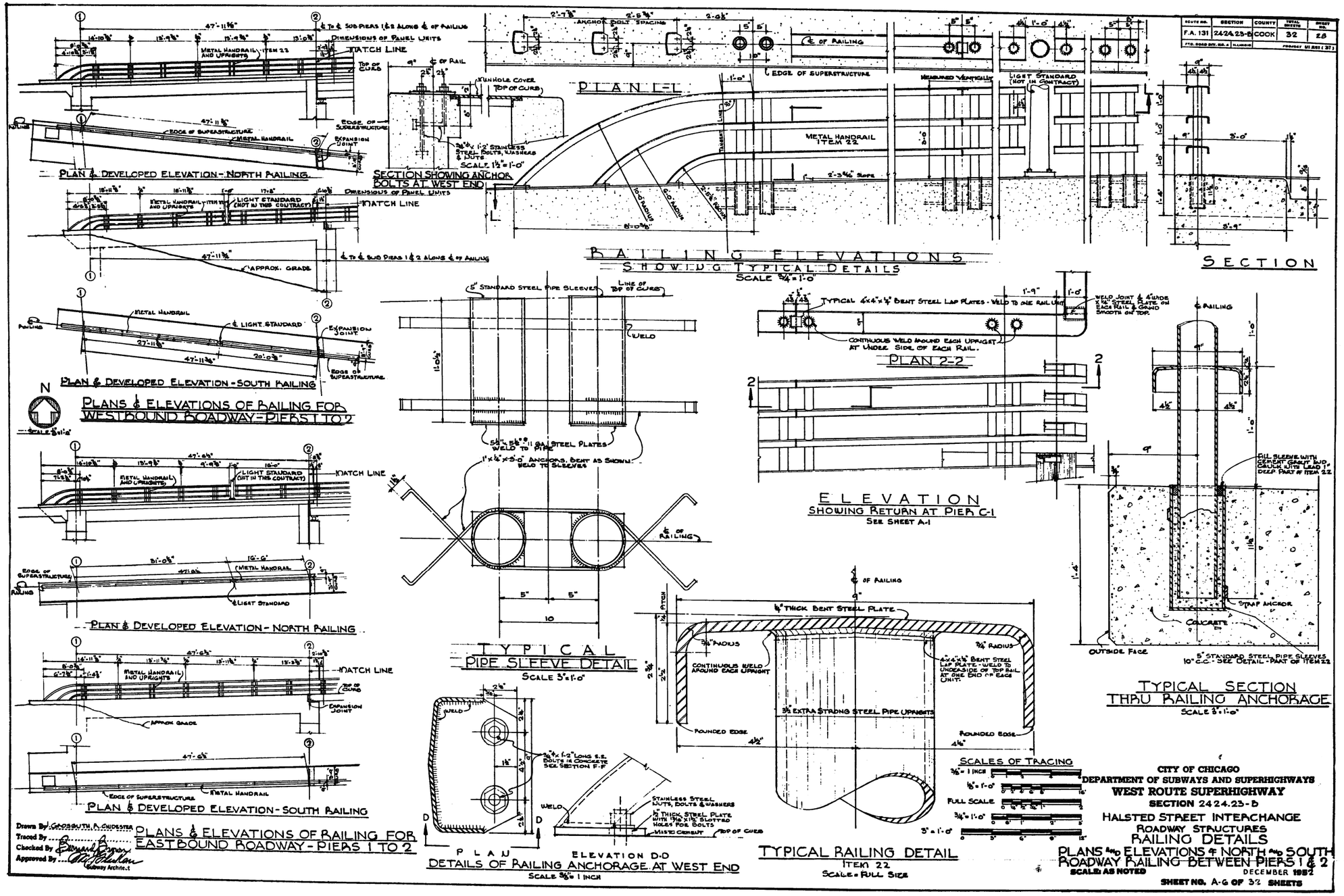

ROUTE NO.	SECTION	COUNTY	TOTAL SHEETS	SHEET NO.
F.A. 131	2424.23-B	COOK	32	28

FOR INFORMATION ONLY

ROUTE NO.	SECTION	COUNTY	TOTAL SHEETS	SHEET NO.
F.A. 131	2424.23b	COOK	32	29
FED. ROAD DIV. NO. 6	ILLINOIS		PROJECT UI 201.27	

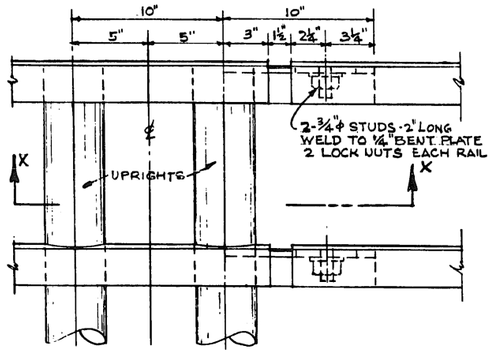

ELEVATION

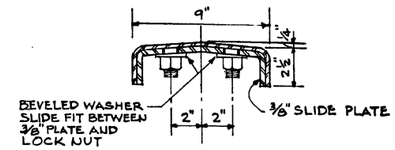

SECTION Y-Y

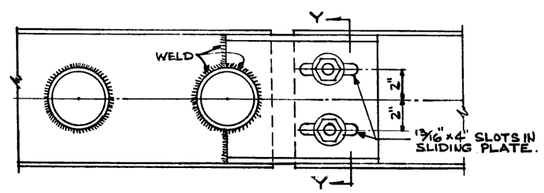

SECTION X-X

DETAILS OF SLIDING RAIL EXPANSION JOINT

SCALE 3"=1'-0"

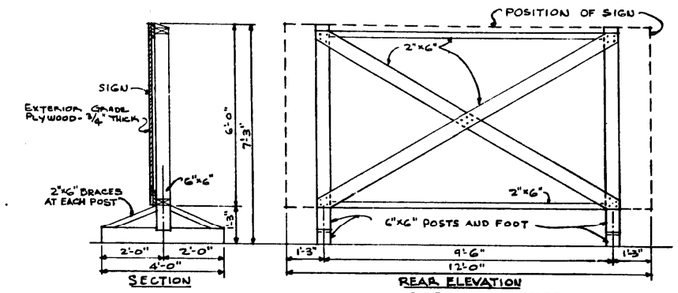

SECTION

REAR ELEVATION

SIGN SUPPORT

SCALE ½"=1'-0"

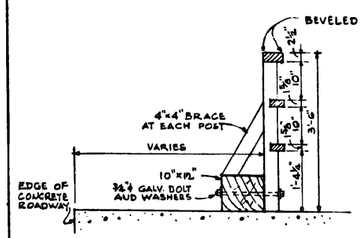

SECTION A-A

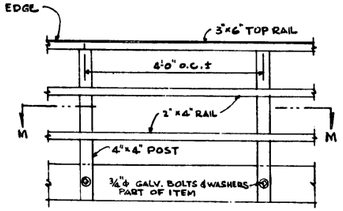

TYPICAL ELEVATION

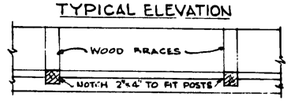

PLAN M-M

WOOD GUARD RAIL DETAILS

ITEM 23

SCALE ¾"=1'-0"

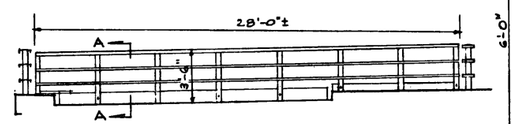

ELEVATION WOOD GUARD RAIL

SCALE ½"=1'-0"

SEE SHEET A-1 FOR LOCATION

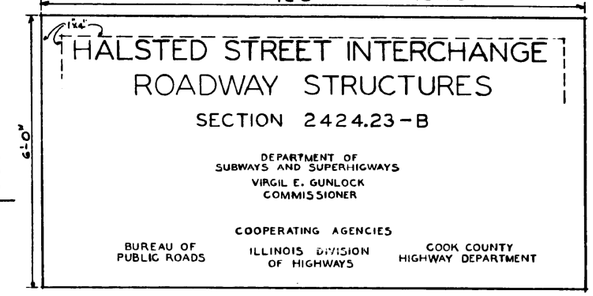

ELEVATION OF SIGN

SCALE: ¾"=1'-0"

SIGN TO BE IN THREE COLORS

PROJECT SIGN DETAILS

2 REQUIRED

Drawn By J. GROZEUTH

Traced By

Checked By

Approved By

Subway Architect

SCALES OF TRACING

½"=1'-0" 0 1' 2' 3' 4' 8'

½"=1'-0" 0 6" 1' 2' 3' 4'

¾"=1'-0" 0 6" 1' 2' 3

3"=1'-0" 0 3" 6" 9" 1' 12'

SCALE: AS NOTED

CITY OF CHICAGO

DEPARTMENT OF SUBWAYS AND SUPERHIGHWAYS

WEST ROUTE SUPERHIGHWAY

SECTION 2424.23-B

HALSTED STREET INTERCHANGE

ROADWAY STRUCTURES

MISCELLANEOUS RAILING DETAILS

WOOD GUARD RAIL AND SIGN

DECEMBER 1952

SHEET NO. A-7 OF 32 SHEETS

0161704-60X75-EXT-19.dgn

AECOM

USER NAME = floresg	DESIGNED -	REVISED	
	CHECKED -	REVISED	
PLOT SCALE = N.T.S.	DRAWN -	REVISED	
PLOT DATE = 5/5/2017	DATE - 5/10/2017	REVISED	

STATE OF ILLINOIS

DEPARTMENT OF TRANSPORTATION

EXISTING PLANS

STRUCTURE NO. 016-1029

SHEET NO. 19 OF 19 SHEETS

F.A.I. RTE.	SECTION	COUNTY	TOTAL SHEETS	SHEET NO.
90/94/290	2014-001 R&B	COOK	696	292
		CONTRACT NO. 60X75		
		ILLINOIS FED. AID PROJECT		

Bench Mark: Square cut at center of door entrance to 707 W. Harrison St; South side of Harrison St. ±90' west of west line of Des Plaines. Elevation 597.47. A + cut in the SE anchor bolt at the 11th street light N. of Roosevelt on the W. side of Halsted. Elev. = 594.06.

Existing Structure: S.N. 016-0461 was originally built in 1952 as F.A. Route Number 131, Section 062-2424.4. The existing structure consists of 16 main spans of multi-unit steel continuous multi-beam superstructures with additional entrance and exit ramp spans along Spans 12 and 13. The existing structure has an overall length of approximately 1301'-4" and an average out-to-out width of approximately 162'-0" for the main spans and 25'-0" for the ramp spans. The substructure units are founded on drilled shafts and consist of 17 multi column piers. The existing bridge is to be rehabilitated through a combination of partial removal and replacement, repairs, and partial infill of ramp spans.

Traffic Control: Two lanes of mainline traffic will be maintained utilizing stage construction. Canal Street Exit Ramp will be closed during stage construction. Ramp traffic will be maintained utilizing stage construction.

Salvage: None

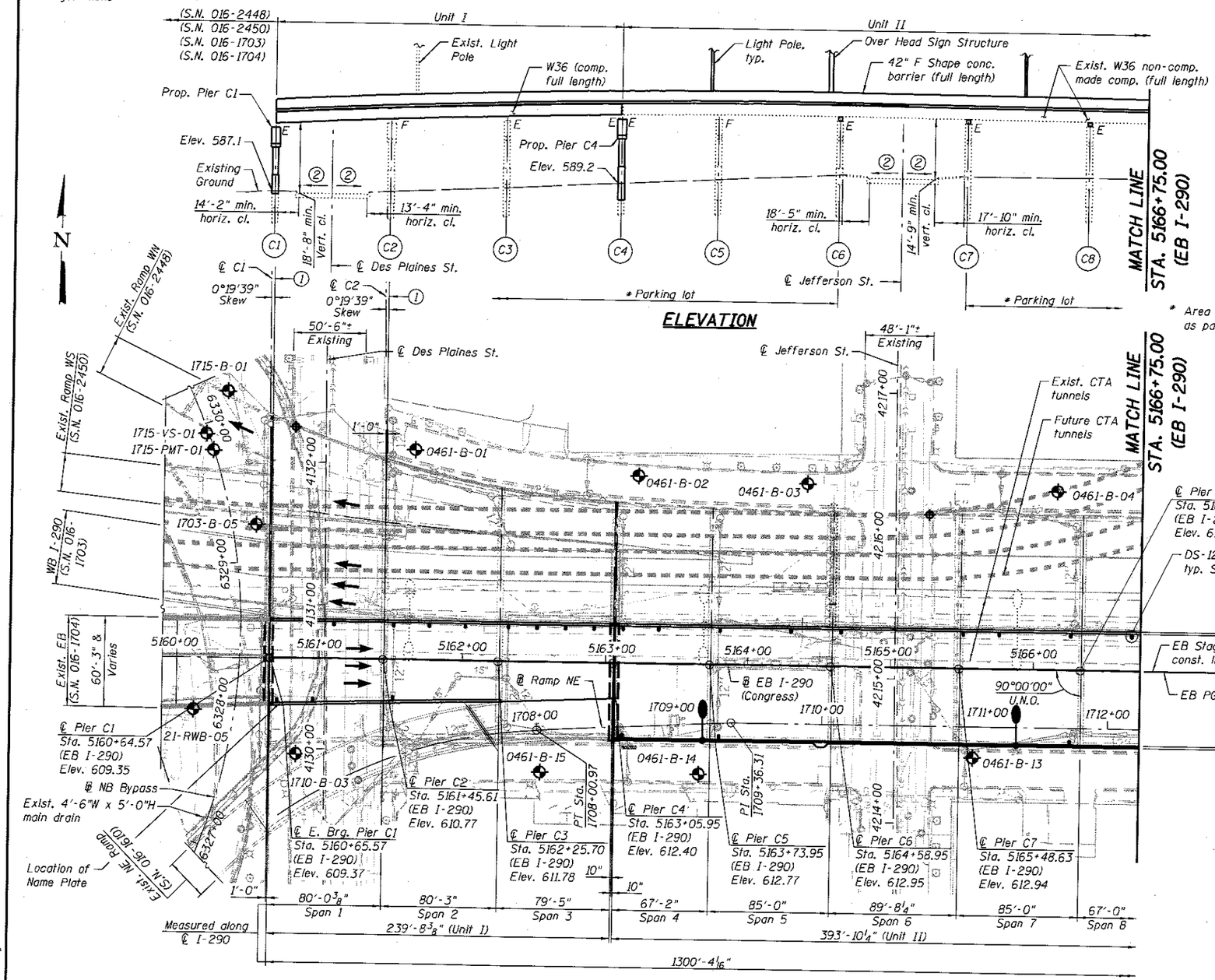

① Line perpendicular to ℄ I-290

② Varies 1.4% to 3.6%

Notes:
1. For Scope of Work light pole location sign structure location and Scupper Table, see sheet S2-2.
2. For ℄ Pier & ℄ I-290 Intersect Stationing, see sheet S2-5.
3. For Curve Data and Geometric Layout, see sheet S2-5.
4. For Profile Grades, see sheet S2-6 and S2-7.
5. For Protective Shield limits, see sheet S2-17.
6. Skew is taken from a line normal to ℄ I-290.
7. Existing utilities attached to structure will be maintained/relocated during construction.

* Area below structure is utilized as parking lot.

DESIGN SPECIFICATIONS

2014 AASHTO LRFD Bridge Design Specifications, 7th Edition with 2015 and 2016 Interims (Spans 1-3)
2002 AASHTO Standard Specifications for Highway Bridges (Spans 4-16)

DESIGN STRESSES

FIELD UNITS (New Construction)

f'c = 3,500 psi
fy = 60,000 psi (Reinforcement)
fy = 50,000 psi (M270 Grade 50)

FIELD UNITS (Exist. Construction)

f'c = 3,500 psi
fy = 60,000 psi (Deck Reinforcement)
fy = 40,000 psi (Pier Reinforcement)
fy = 33,000 psi (ASTM A7)

LOADING HL-93 (SPANS 1-3 & PIER C1 THRU C4)
LOADING HS20-44 & ALT. MILITARY (SPANS 4-16)

Allow 25#/sq. ft. for future wearing surface

SEISMIC DATA

Seismic Performance Zone (SPZ) = 1
Design Spectral Acceleration at 1.0 sec. (S_{D1}) = 0.085
Design Spectral Acceleration at 0.2 sec. (S_{DS}) = 0.144
Soil Site Class = D

APPROVED
For Structural Adequacy Only
Engineer of Bridges & Structures

STATE OF ILLINOIS
JAMAL L GRAINAWI
081-005161
CHICAGO, ILLINOIS
LICENSED STRUCTURAL ENGINEER

Signed Jamal Grainawi
JAMAL I. GRAINAWI, S.E. Il. Lic. No. 081-005161
Expires 11-30-2018.
Date May 8, 2017

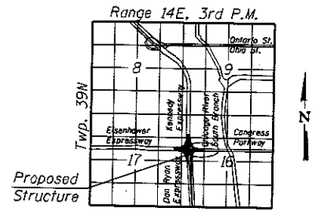

LOCATION SKETCH

LEGEND:

- Water Line
- Electric
- Telephone line
- Television line
- Combined Sewer
- Storm Sewer
- Light Standard
- Point of min. vert. cl.
- Soil Boring Location

GENERAL PLAN & ELEVATION - I
EB I-290 (CONGRESS) VIADUCT OVER DES PLAINES ST. TO CANAL ST.
F.A.I. ROUTE 90/94/290
SECTION 2014-001 R&B (EB)
COOK COUNTY
STATION 5165+03.09
STRUCTURE NO. 016-0461

PARSONS BRINCKERHOFF	USER NAME = patald	DESIGNED - PJL	REVISED -
		CHECKED - AH	REVISED -
	PLOT SCALE = N.T.S.	DRAWN - DCP	REVISED -
	PLOT DATE = 6/28/2017	CHECKED - JIG	REVISED -

STATE OF ILLINOIS
DEPARTMENT OF TRANSPORTATION

SHEET NO. S2-01 OF S2-137 SHEETS

F.A.I. RTE.	SECTION	COUNTY	TOTAL SHEETS	SHEET NO.
90/94/290	2014-001 R&B (EB)	COOK	696	293

CONTRACT NO. 60X75
ILLINOIS FED. AID PROJECT

016046I-60X75-S001-CPE.dgn

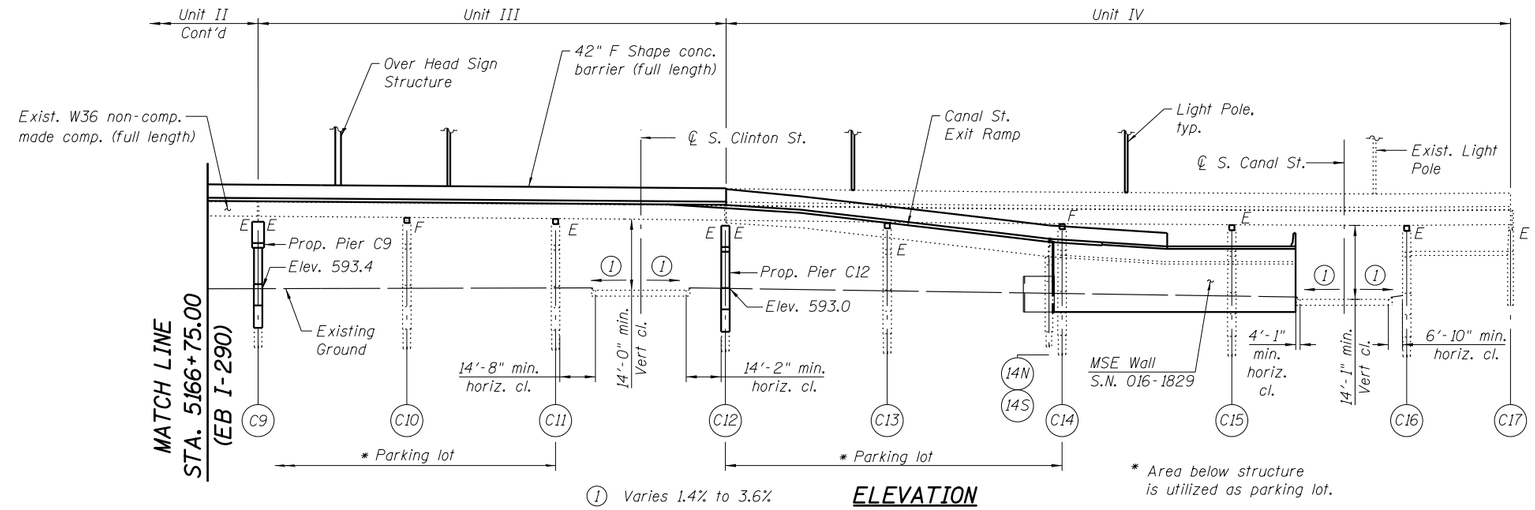

ELEVATION

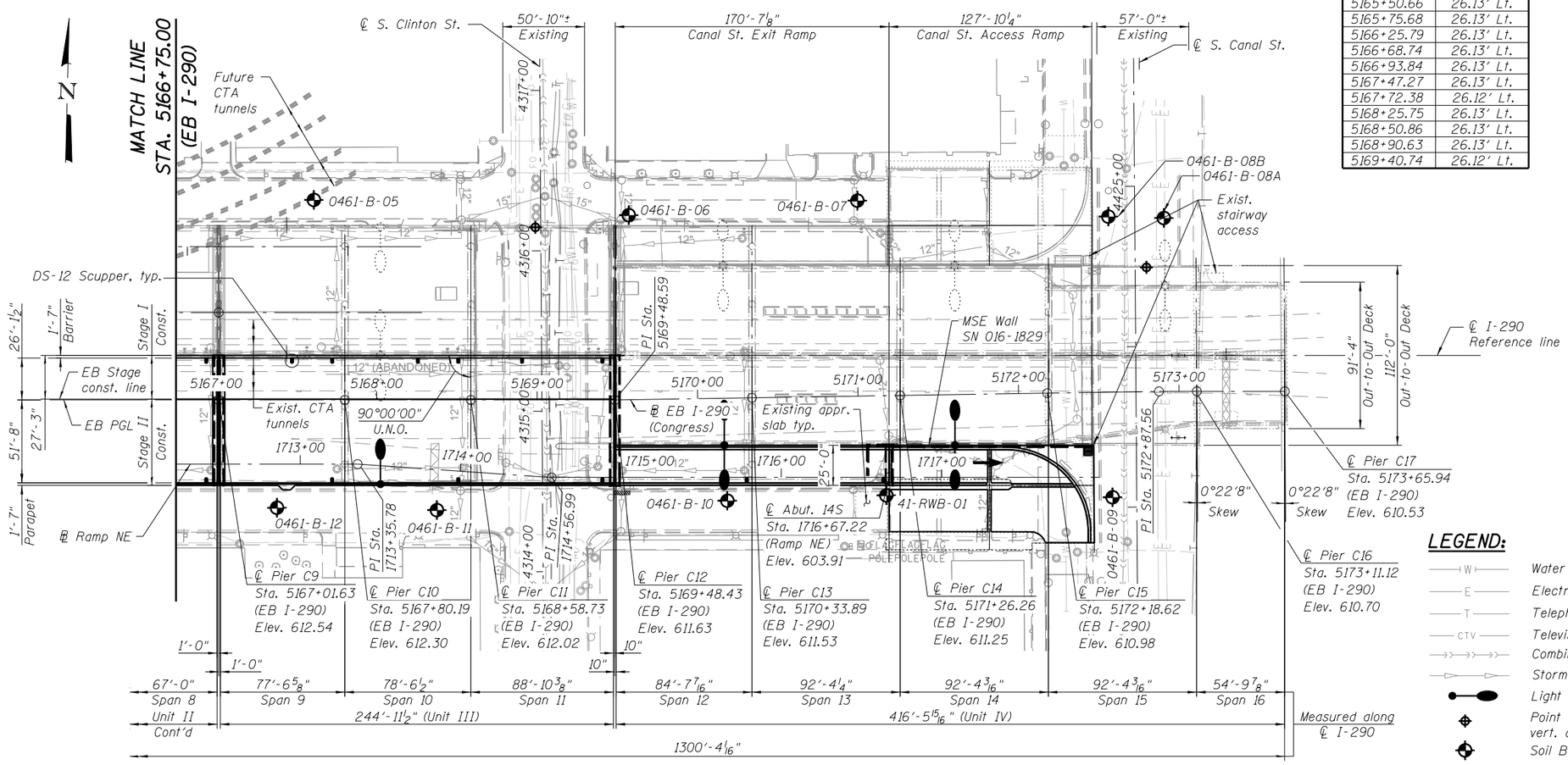

PLAN

DS-12 SCUPPER LOCATIONS EB I-290

Station	Offset
5160+70.75	30.77' Rt.
5160+95.75	30.01' Rt.
5161+10.00	26.13' Lt.
5161+51.76	28.29' Rt.
5163+12.13	51.67' Rt.
5163+80.15	51.67' Rt.
5166+25.80	51.67' Rt.
5166+93.81	51.69' Rt.
5167+72.28	51.68' Rt.
5168+50.87	51.67' Rt.
5169+40.71	51.67' Rt.
5170+29.74	52.95' Rt.
5171+14.87	54.29' Rt.
5161+51.82	26.13' Lt.
5161+76.72	26.13' Lt.
5162+01.72	26.13' Lt.
5162+31.76	26.13' Lt.
5162+51.65	26.13' Lt.
5162+71.65	26.13' Lt.
5162+91.65	26.13' Lt.
5163+12.00	26.13' Lt.
5163+36.90	26.13' Lt.
5163+80.00	26.13' Lt.
5164+29.94	26.13' Lt.
5164+65.07	26.13' Lt.
5165+50.66	26.13' Lt.
5165+75.68	26.13' Lt.
5166+25.79	26.13' Lt.
5166+68.74	26.13' Lt.
5166+93.84	26.13' Lt.
5167+47.27	26.13' Lt.
5167+72.38	26.12' Lt.
5168+25.75	26.13' Lt.
5168+50.86	26.13' Lt.
5168+90.63	26.13' Lt.
5169+40.74	26.12' Lt.

SCOPE OF WORK

1. Replace EB deck in Spans 1 through 11 with a composite deck.
2. Repair EB deck in Spans 12 through 15.
3. Repair EB superstructure in Spans 4 through 15. (End diaphragms).
4. Remove and replace EB superstructure between Piers C1 & C4.
5. Replace EB bridge deck expansion joints with modular type at Piers C9 & C12 and strip seal type at Piers C1, C4 & 14S.
6. Replace high profile rocker bearings with elastomeric bearings at EB Piers C3, C6, C7, C8, C11, C13, C15 & C16.
7. Repair all EB substructure units except Piers C1, C4, C9, C12 & C17.
8. Reconstruct concrete columns and caps of EB Piers C1, C4, C9 & C12 and reconfigure beam seats at Piers C1 through C4 to accommodate the proposed EB deck geometry.
9. Remove and replace existing Chain Link Fence in Spans 14 through 16 (See roadway plans).
10. Remove and replace drainage system in EB Spans 1 through 11 (See drainage plans). Clean and/or repair the existing scupper system (grates and pipes) in Spans 12 through 15.
11. Remove and replace underpass lighting over the existing roadways (See electrical plan).

SIGN STRUCTURE LOCATIONS EB I-290

Station	Offset
5164+51.95	54.25 Rt.
5167+43.94	54.25 Rt.

LIGHT POLE LOCATIONS EB I-290

Station	Offset
5163+68.70	52.46 Rt.
5165+88.37	52.46 Rt.
5168+02.38	52.46 Rt.
5170+16.19	29.22 Rt.
5171+59.91	31.46 Rt.

** Existing light poles in Unit IV to be removed and replaced and to utilize existing light support. The Contractor shall provide all precautions necessary to prevent damage to the existing light support during the removal work. If the existing light support is damaged such as the new light pole cannot be installed properly, contractor must provide detail to match existing light support to be approved by the engineer. All Cost of new light support shall be included in Concrete Superstructure. For existing light support detail, See sheet 178 of 194 of existing plans for S.N. 016-0461.

Notes:
1. For ℄ Pier & ℄ I-290 Intersect Stationing, see sheet S2-5.
2. For Curve Data and Geometric Layout, see sheet S2-5.
3. For Profile Grades, see sheet S2-6 and S2-7.
4. For Protective Shield limits, see sheet S2-17.
5. Skew is taken from a line normal to ℄ I-290.
6. Existing utilities attached to structure will be maintained/relocated during construction.

LEGEND:

- Water Line
- Electric
- Telephone line
- Television line
- Combined Sewer
- Storm Sewer
- Light Standard
- Point of min. vert. cl.
- Soil Boring Location

GENERAL PLAN & ELEVATION - II
EB I-290 (CONGRESS) VIADUCT OVER DES PLAINES ST. TO CANAL ST.
F.A.I. ROUTE 90/94/290
SECTION 2014-001 R&B (EB)
COOK COUNTY
STATION 5165+03.09
STRUCTURE NO. 016-0461

PARSONS BRINCKERHOFF

USER NAME = pateld	DESIGNED - PJL	REVISED -	
	CHECKED - AH	REVISED -	
PLOT SCALE = N.T.S.	DRAWN - DCP	REVISED -	
PLOT DATE = 6/28/2017	CHECKED - JIG	REVISED -	

STATE OF ILLINOIS
DEPARTMENT OF TRANSPORTATION

SHEET NO. S2-02 OF S2-137 SHEETS

F.A.I. RTE.	SECTION	COUNTY	TOTAL SHEETS	SHEET NO.
90/94/290	2014-001 R&B (EB)	COOK	696	294

CONTRACT NO. 60X75

ILLINOIS FED. AID PROJECT

0160461-60X75-S002-GPE.dgn

GENERAL NOTES:

1. Fasteners shall be ASTM A325 Type 1, hot dipped galvanized bolts. Bolts $^{7}/_{8}$" ϕ, holes $^{15}/_{16}$" ϕ, unless otherwise noted.

2. Calculated weight of Structural Steel = 434,130 lbs. (Gr. 50)
   = 3,300 lbs. (Gr. 36)

3. All structural steel except for steel in Temporary Support System shall be hot-dip galvanized (see special provisions).

4. No field welding is permitted except as specified in the contract documents.

5. The Contractor shall test the existing welds by non-destructive methods within 2 ft. of the end of the existing cover plates for cracks after removal of the existing concrete deck. Dye penetrant (PT), magnetic particle (MT), or other approved testing method shall be performed by qualified personnel approved by the Engineer. If cracks are found, report them to the Bureau of Bridges and Structures for disposition. The cost of testing is included in Removal of Existing Concrete Deck. The cost of crack repair, if necessary, will be paid for according to Article 109.04 of the Standard Specifications.

6. Reinforcement bars designated (E) shall be epoxy coated.

7. Prior to pouring the new concrete deck, all heavy or loose rust, loose mill scale, and other loose or potentially detrimental foreign material shall be removed from the surfaces in contact with concrete. Tightly adhered paint may remain unless otherwise noted. Removal shall be accomplished by methods that will not damage the steel and the cost will be included in the pay item covering removal of the existing concrete.

   As directed by the Engineer, existing construction accessories welded to the top flange of beams and girders shall be removed. The weld areas shall be ground flush and inspected for cracks using magnetic particle testing (MT) or dye penetrant testing (PT) by qualified personnel approved by the Engineer. Any cracks that cannot be removed by grinding $^{1}/_{4}$ in. deep shall be identified and reported to the Bureau of Bridges and Structures for further disposition. The cost of removing welded accessories, grinding and inspecting weld areas and grinding cracks will be paid for according to Article 109.04 of the Standard Specifications.

8. If the Contractor elects to use cantilever forming brackets on the exterior beams or girders, the brackets shall be placed at the same locations as required for the hardwood blocks in Article 503.06(b) of the Standard Specifications. If additional cantilever forming brackets are required, hardwood blocking shall be wedged between the exterior and first interior beam at each of these additional bracket locations.

9. Plan dimensions and details relative to existing plans are subject to nominal construction variations. The Contractor shall field verify existing dimensions and details affecting new construction and make necessary approved adjustments prior to construction or ordering of materials. Such variations shall not be cause for additional compensation for a change in scope of the work, however, the Contractor will be paid for the quantity actually furnished at the unit price bid for the work.

10. Bearing seat surfaces shall be constructed or adjusted to the designated elevations within a tolerance of $^{1}/_{8}$" (0.01 ft.). Adjustment shall be made either by grinding the surface or by shimming the bearings.

11. Concrete Sealer shall be applied to the designated areas of the Piers C1, C4, C9 & C12.

12. Cleaning and field painting of structural steel shall be done under a separate painting contract, unless noted otherwise.

13. The existing structural steel coating contains lead. The Contractor shall take appropriate precautions to deal with the presence of lead on this project.

14. Existing structural steel shall only be cleaned and painted as required by the Special Provision "Cleaning and Painting Contact Surface Areas of Existing Steel Structures".

15. Slipforming of the parapet is not allowed.

16. Temporary Soil Retention System shall be as per Std. Spec. Section 522.07 and as modified herein. Temporary Soil Retention System shall be installed without the use of impact-type pile drivers. The proposed equipment and procedures used for the installation of Temporary Soil Retention System shall be submitted to the Engineer for approval prior to their use. If vibratory equipment utilized, the Contractor shall also submit documentation regarding the operating noise levels and operating vibration characteristics of the equipment proposed. The approval of the equipment and procedure by the Engineer does not guarantee the performance in the field of the equipment will be acceptable. If in the judgment of the Engineer, the noise and/or vibration effects exceed those required by the local residents, then the Contractor must halt production and find a remedy suitable to the Engineer. Threshold values for vibration monitoring are included in the special provision "CONSTRUCTION VIBRATION MONITORING". The costs incurred finding suitable equipment and procedures shall be included in the cost of Temporary Soil Retention System. No additional costs shall be paid for this effort.

INDEX OF SHEETS

S2-1 General Plan & Elevation I
S2-2 General Plan & Elevation II
S2-3 General Data I
S2-4 General Data II
S2-5 Geometric Layout & Curve Data
S2-6 Profile Grade
S2-7 Offset Sketch
S2-8 Substructure Layout I
S2-9 Substructure Layout II
S2-10 Stage Construction Details I - Unit I
S2-11 Stage Construction Details II - Unit I
S2-12 Stage Construction Details I - Unit II
S2-13 Stage Construction Details II - Unit II
S2-14 Stage Construction Details I - Unit III
S2-15 Stage Construction Details II - Unit III
S2-16 Stage Construction Details - Unit IV & Exit Ramp
S2-17 Existing Structure Removal Details I
S2-18 Existing Structure Removal Details II
S2-19 Existing Structure Removal Details III
S2-20 Existing Structure Removal Details IV
S2-21 Temporary Concrete Barrier for Stage Construction
S2-22 Top of Slab Elevation Plan - Unit I
S2-23 Top of Slab Elevations I - Unit I
S2-24 Top of Slab Elevations II - Unit I
S2-25 Top of Slab Elevations III - Unit I
S2-26 Top of Slab Elevations IV - Unit I
S2-27 Top of Slab Elevation Plan - Unit II
S2-28 Top of Slab Elevations I - Unit II
S2-29 Top of Slab Elevations II - Unit II
S2-30 Top of Slab Elevations III - Unit II
S2-31 Top of Slab Elevations IV - Unit II
S2-32 Top of Slab Elevations V - Unit II
S2-33 Top of Slab Elevations VI - Unit II
S2-34 Top of Slab Elevations VII - Unit II
S2-35 Top of Slab Elevation Plan - Unit III
S2-36 Top of Slab Elevations I - Unit III
S2-37 Top of Slab Elevations II - Unit III
S2-38 Top of Slab Elevations III - Unit III
S2-39 Top of Slab Elevations IV - Unit III
S2-40 Top of Slab Elevations V - Unit III
S2-41 Top of Slab Elevations VI - Unit III
S2-42 Top of Slab Elevation Plan - Exit Ramp
S2-43 Top of Slab Elevations - Exit Ramp
S2-44 Deck Plan - Unit I
S2-45 Deck Details I - Unit I
S2-46 Deck Details II - Unit I
S2-47 Deck Details III - Unit I
S2-48 Deck Details IV - Unit I
S2-49 Deck Plan I - Unit II
S2-50 Deck Plan II - Unit II
S2-51 Deck Details I - Unit II
S2-52 Deck Details II - Unit II
S2-53 Deck Details III - Unit II
S2-54 Deck Details IV - Unit II
S2-55 Deck Details V - Unit II
S2-56 Deck Plan - Unit III
S2-57 Deck Details I - Unit III
S2-58 Deck Details II - Unit III
S2-59 Deck Details III - Unit III
S2-60 Deck Details IV - Unit III
S2-61 Deck Details V - Unit III
S2-62 Deck Plan Exit Ramp
S2-63 Deck Details I - Exit Ramp
S2-64 Deck Details II - Exit Ramp
S2-65 Deck Details III - Exit Ramp
S2-66 Approach Span Plan
S2-67 Approach Span Details
S2-68 Preformed Joint Strip Seal - Pier C1, C4 & 14S
S2-69 Modular Expansion Joint - Pier C9
S2-70 Modular Expansion Joint - Pier C12
S2-71 Modular Expansion Joint Details
S2-72 Drainage System Details - Pier C1, C2, C3 & C4
S2-73 Drainage System Details - Pier C5, C8 & C9
S2-74 Drainage System Details - Pier C10 & C11
S2-75 Drainage System Details - Pier C12
S2-76 Drainage System Details - Pier C13 & C14
S2-77 Drainage System Details - Pier 14S & C15
S2-78 Cleaning Bridge Scuppers and Downspouts
S2-79 Drainage Scupper, DS-12
S2-80 Framing Plan - Unit I
S2-81 Superstructure Steel Details I - Unit I
S2-82 Superstructure Steel Details II - Unit I
S2-83 Framing Plan - Unit II
S2-84 Superstructure Steel Details I - Unit II
S2-85 Framing Plan - Unit III
S2-86 Superstructure Steel Details - Unit III
S2-87 Framing Plan - Exit Ramp
S2-88 Superstructure Steel Details - Unit II, Unit III & Exit Ramp
S2-89 Bearing Details I - Unit I
S2-90 Bearing Details II - Unit I
S2-91 Bearing Details I - Unit II
S2-92 Bearing Details II - Unit II
S2-93 Bearing Details III - Unit II
S2-94 Bearing Details I - Unit III
S2-95 Bearing Details II - Unit III
S2-96 Bearing Details I - Unit IV
S2-97 Bearing Details II - Unit IV
S2-98 Bearing Details - Exit Ramp
S2-99 Column Bearing Details I
S2-100 Pier C1
S2-101 Pier C1 Details
S2-102 Pier C2 & C3 Details
S2-103 Pier C4
S2-104 Pier C4 Details
S2-105 Piers C6 to C8 Details
S2-106 Pier C9
S2-107 Pier C9 Details
S2-108 Pier C11 Details
S2-109 Pier C12
S2-110 Pier C12 Details
S2-111 Pier C13 Details
S2-112 Pier C15 & C16 Details
S2-113 Pier C2 Repair
S2-114 Pier C3 Repair
S2-115 Pier C5 Repair
S2-116 Pier C6 Repair
S2-117 Pier C7 Repair
S2-118 Pier C8 Repair
S2-119 Pier C10 Repair
S2-120 Pier C11 Repair
S2-121 Pier C13 Repair
S2-122 Pier C14 Repair
S2-123 Pier 14S Repair
S2-124 Pier C15 Repair
S2-125 Pier C16 Repair
S2-126 Door Repair - North Enclosure Wall
S2-127 Deck Repair I - Unit IV
S2-128 Deck Repair II - Unit IV
S2-129 Bar Splicer Assembly and Mechanical Splicer Details
S2-130 Boring Logs I
S2-131 Boring Logs II
S2-132 Boring Logs III
S2-133 Boring Logs IV
S2-134 Boring Logs V
S2-135 Boring Logs VI
S2-136 Boring Logs VII
S2-137 Boring Logs VIII

STRUCTURAL ASSESSMENT OF EXISTING STRUCTURE NOTES:

1. In order to construct proposed superstructure & substructure elements, Contractor may elect to support temporary construction material and/or equipment, on the existing structures in the vicinity of the proposed structure. The Contractor shall submit Structural Assessment Report(s) for approval prior to beginning the work. See Special Provision.

2. An Existing Structure Information Package (ESIP) will be provided by the Department to the Contractor upon request.

3. The Contractor shall retain the services of an engineering firm, prequalified in the IDOT consultant selection category of Highway Bridge (Advance Typical), for preparation of the Structural Assessment Report(s). Contractor's pre-approval shall not be applicable for this project. See Special Provision.

   Current Ratings on File for Existing Structures are as follows:

   S.N. 016-0461 (I-290 (Congress) Viaduct over Des Plaines St. to Canal St.)
   Inventory: HS 21.3
   Operating: HS 34.3
   Live Load Restrictions: None

   S.N. 016-1029 (EB I-290 over I-90/94)
   Inventory: HS 17.2
   Operating: HS 28.7
   Live Load Restrictions: None

   S.N. 016-1030 (WB I-290 over I-90/94)
   Inventory: HS 14.7
   Operating: HS 24.5
   Live Load Restrictions: None

4. Inventory and Operating Ratings and Live Load Restrictions are provided for information only. Inventory and Operating Ratings are based on HS loading and configuration. Live Load Restrictions are based on Illinois legal loads and configurations. The Ratings and Live load Restrictions are not necessarily representative of capacities to support the Contractor's equipment.

5. The contractor is advised that the existing structures may contain members in deteriorated conditions with reduced load carrying capacities. It is the Contractor's responsibility to account for the condition of existing structures when developing construction procedures for using them to support construction loads and for the complete or partial removal or replacement of the structure.

6. The contractor shall verify that the structural demands of the applied loads due to the Contractor's means and methods will not exceed the available capacity of the structure at the time loads are applied. Most likely, the Contractor will be required to provide additional shoring under the existing bridges (or other methods of retrofitting) to support construction loads. Design, installation and subsequent removal of such shoring system will be the responsibility of the Contractor and will not be paid separately.

7. The Contractor shall use caution and not damage any component of the existing structure. Upon completion of work and prior to allowing traffic back on the existing structure the contractor must restore existing structure in its original condition.

TOTAL BILL OF MATERIAL

ITEM	UNIT	SUPER	SUB	TOTAL
Removal of Existing Structures No. 2	Each	1		1
Concrete Removal	Cu. Yd.	15.0	153.5	168.5
Removal of Existing Concrete Deck	Each	3		3
Protective Shield	Sq. Yd.	8,198		8,198
Structure Excavation	Cu. Yd.		82	82
Concrete Structures	Cu. Yd.		347.7	347.7
Concrete Superstructure	Cu. Yd.	2,198.5		2,198.5
Bridge Deck Grooving	Sq. Yd.	7,182		7,182
Protective Coat	Sq. Yd.	8,476		8,476
Furnishing and Erecting Structural Steel	L. Sum	0.3		0.3
Stud Shear Connectors	Each	33,438		33,438
Reinforcement Bars, Epoxy Coated	Pound	589,720		589,720
Bar Splicers	Each	2,660		2,660
Name Plate	Each	1		1
Preformed Joint Strip Seal	Foot	163		163
Elastomeric Bearing Assembly, Type I	Each	101		101
Elastomeric Bearing Assembly, Type II	Each	77		77
Elastomeric Bearing Assembly, Type III	Each	14		14
Anchor Bolts, 3/4"	Each	114		114
Anchor Bolts, 1"	Each	286		286
Anchor Bolts, 1 1/4"	Each	20		20
Temporary Soil Retention System	Sq. Ft.		711	711
Concrete Sealer	Sq. Ft.		7,032	7,032
Temporary Drainage System No. 2	L. Sum	1		1
Cleaning Bridge Scuppers and Downspouts	Each	6		6
Removal of Temporary Soil Retension System	Sq. Ft.		3,916	3,916
Access Door	Each		1	1
High Load Multi-Rotational Bearings, Guided Expansion, 250k	Each		8	8
Jack and Remove Existing Bearings	Each	162		162
Structural Steel Repair	Pound	18,774		18,774
Bridge Deck Latex Concrete Overlay, 2 3/4 inches	Sq. Yd.	606		606
Handrail Removal	Foot	63		63
Bridge Deck Scarification 2 3/4"	Sq. Yd.	606		606
Structural Repair of Concrete (Depth Equal to or Less than 5 Inches)	Sq. Ft.		768	768
Structural Repair of Concrete (Depth Greater than 5 Inches)	Sq. Ft.	24		24
Deck Slab Repair (Full Depth, Type I)	Sq. Yd.	2		2
Deck Slab Repair (Full Depth, Type II)	Sq. Yd.	38		38
Drainage Scuppers, DS-12	Each	36		36
Drainage System	L. Sum	0.7		0.7
Silicone Joint Sealer, 1/2"	Foot	75		75
Silicone Joint Sealer, 1"	Foot	102		102
Modular Expansion Joint 6"	Foot	158		158
Temporary Shoring	Each	6	4	10

STATION 5165+06.00
RE-BUILT 20-- BY
STATE OF ILLINOIS
F.A.I. RT. 90/94/290
SEC. 2014-001 R&B
LOADING HL-93
STR. NO. 016-0461

NAME PLATE

See Std. 515001
Existing Name Plate shall be cleaned and relocated next to new Name Plate. Cost included with Name Plate.

CURVE DATA
(WB I-290 (Congress))

CURVE P-CON-WB-1
PI STA. = 5212+68.02
Δ = 8° 12′ 18″ (RT)
D = 3° 30′ 31″
R = 1,633.00′
T = 117.13′
L = 233.85′
E = 4.20′
e = 4.40%
T.R. = 67′
S.E. RUN = 147′
P.C. STA. = 5211+50.90
P.T. STA. = 5213+84.75
DS = 45
PS = 45

CURVE DATA
(EB I-290 (Congress))

PROP. CURVE P-CON-EB-2
PI STA. = 5159+19.48
Δ = 1° 39′ 04″ (RT)
D = 0° 52′ 23″
R = 6,562.00′
T = 94.56′
L = 189.11′
E = 0.68′
e = 2.00%
T.R. = 72′
S.E. RUN = 72′
P.C. STA. = 5158+24.92
P.T. STA. = 5160+14.03
DS = 50
PS = 45

PROP. CURVE P-CON-EB-3
PI STA. = 5184+63.84
Δ = 2° 50′ 37″ (RT)
D = 1° 02′ 45″
R = 5,478.00′
T = 135.97′
L = 271.88′
E = 1.69′
e = NC
T.R. = NA
S.E. RUN = NA
P.C. STA. = 5183+27.87
P.T. STA. = 5185+99.75
DS = 40
PS = 35

CURVE DATA
(Ramp NE)

CURVE P-CIR-NE-1
PI STA. = 1706+01.77
Δ = 86° 38′ 23″ (RT)
D = 16° 22′ 13″
R = 350.00′
T = 330.05′
L = 529.25′
E = 131.08′
e = 5.60%
T.R. = 48′
S.E. RUN = 136′
P.C. STA. = 1702+71.71
P.T. STA. = 1708+00.97
DS = 30
PS = 30

CURVE DATA
(Ramp WN)

PROP. CURVE P-CIR-WN-1
PI STA. = 1102+20.05
Δ = 4° 14′ 49″ (RT)
D = 3° 34′ 52″
R = 1,600.00′
T = 59.33′
L = 118.60′
E = 1.10′
e = 4.40%
T.R. = NA
S.E. RUN = 64′
P.C. STA. = 1101+60.73
P.T. STA. = 1102+79.32
DS = 30
PS = 30

PROP. CURVE P-CIR-WN-2
PI STA. = 1105+88.67
Δ = 69° 00′ 44″ (RT)
D = 12° 43′ 57″
R = 450.00′
T = 309.35′
L = 542.02′
E = 96.07′
e = 5.20%
T.R. = NA
S.E. RUN = 46′
P.C. STA. = 1102+79.32
P.T. STA. = 1108+21.34
DS = 30
PS = 30

CURVE DATA
(Ramp WS)

PROP. CURVE P-CIR-WS-1
PI STA. = 1210+36.88
Δ = 26° 00′ 07″ (RT)
D = 8° 48′ 53″
R = 650.00′
T = 150.08′
L = 294.98′
E = 17.10′
e = 5.20%
T.R. = 52′
S.E. RUN = 134′
P.C. STA. = 1208+86.80
P.T. STA. = 1211+81.78
DS = 35
PS = 25

For information only.
part of future contract

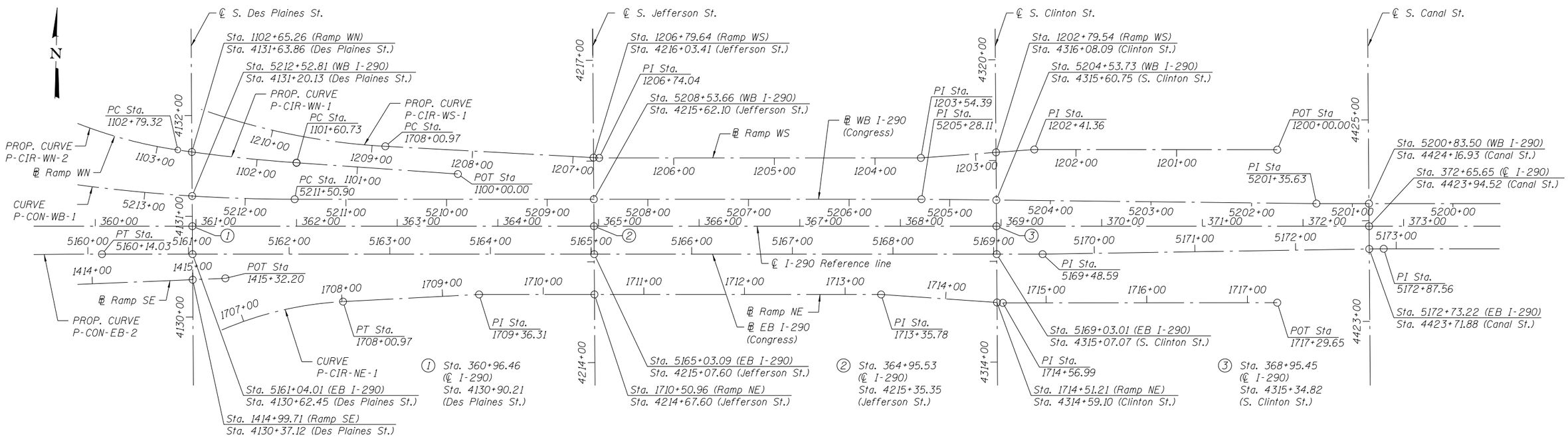

GEOMETRIC LAYOUT

PARSONS BRINCKERHOFF	USER NAME = pateld	DESIGNED - PJL	REVISED -	STATE OF ILLINOIS DEPARTMENT OF TRANSPORTATION	GEOMETRIC LAYOUT & CURVE DATA STRUCTURE NO. 016-0461	F.A.I. RTE.	SECTION	COUNTY	TOTAL SHEETS / SHEET NO.
		CHECKED - AH	REVISED -			90/94/290	2014-001 R&B (EB)	COOK	696 / 297
	PLOT SCALE = N.T.S.	DRAWN - DCP	REVISED -					CONTRACT NO. 60X75	
	PLOT DATE = 6/28/2017	CHECKED - JIG	REVISED -		SHEET NO. S2-05 OF S2-137 SHEETS		ILLINOIS FED. AID PROJECT		

0160461-60X75-S005-DET.dgn

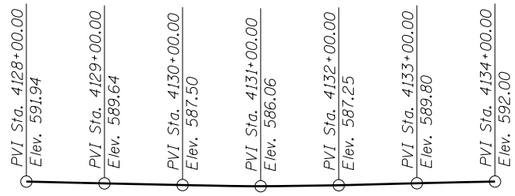

EXISTING PROFILE GRADE
(Along ℄ S. Des Plaines St.)

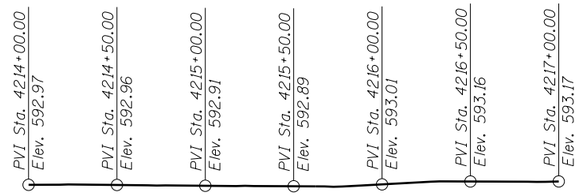

EXISTING PROFILE GRADE
(Along ℄ S. Jefferson St.)

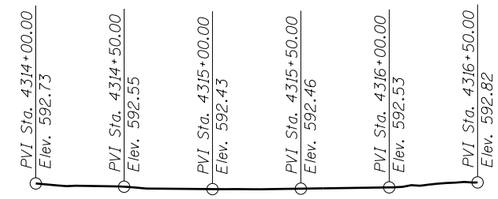

EXISTING PROFILE GRADE
(Along ℄ S. Clinton St.)

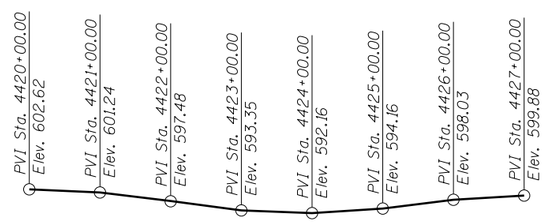

EXISTING PROFILE GRADE
(Along ℄ S. Canal St.)

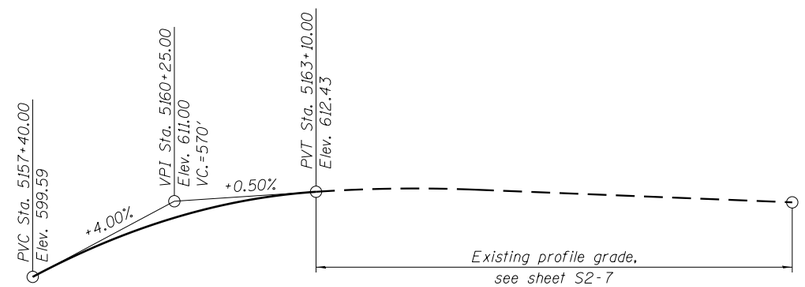

PROFILE GRADE
(Along ℄ EB I-290 (Congress))

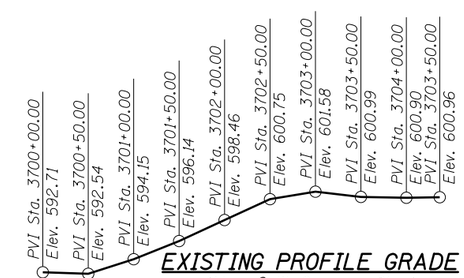

EXISTING PROFILE GRADE
(Along ℄ W. Congress Pkwy)

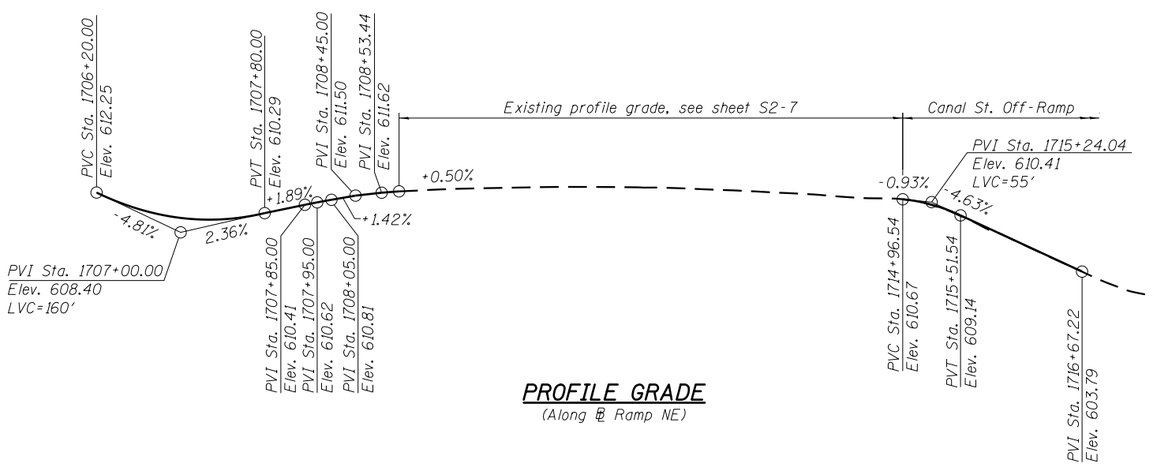

PROFILE GRADE
(Along ℄ Ramp NE)

Note:

1. Existing profiles of EB I-290 (Congress) from Pier C4 to Pier C12, S. Des Plains St., S. Jefferson St., S. Clinton St., W. Congress Parkway and S. Canal St. is based on a field survey by Dynasty Group, Inc. on 09-18-2015. Existing profile grade is to remain unchanged.

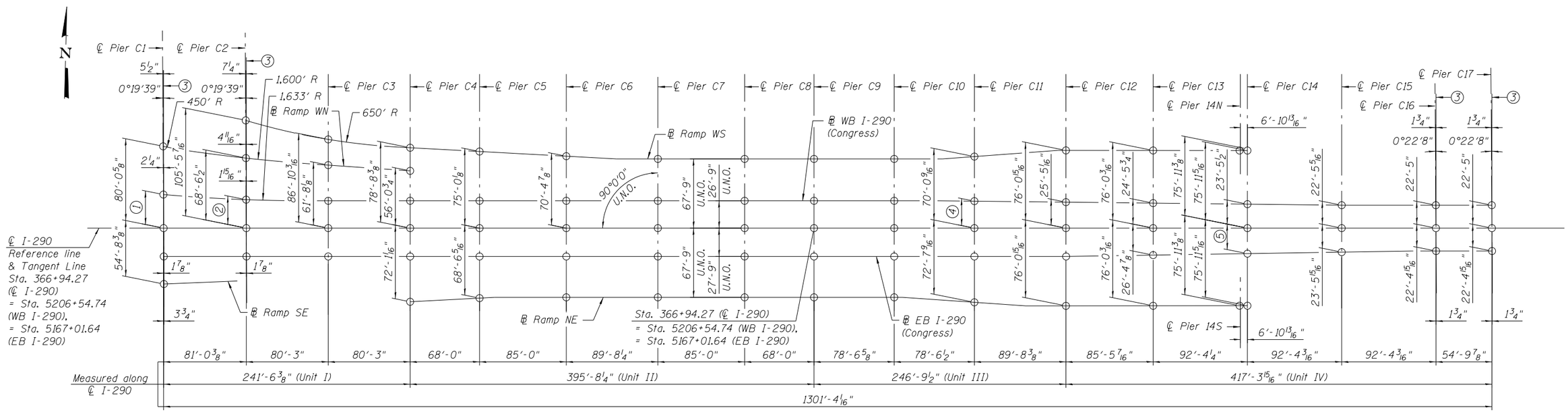

OFFSET SKETCH

℄ PIER & ℄ I-290 INTERSECT STATIONING

℄ Pier C1	Sta. 360+57.05	℄ Pier C10	Sta. 367+72.82
℄ Pier C2	Sta. 361+38.08	℄ Pier C11	Sta. 368+51.36
℄ Pier C3	Sta. 362+18.33	℄ Pier C12	Sta. 369+41.06
℄ Pier C4	Sta. 362+98.58	℄ Pier C13	Sta. 370+26.51
℄ Pier C5	Sta. 363+66.58	℄ Pier 14N/14S	Sta. 371+11.96
℄ Pier C6	Sta. 364+51.58	℄ Pier C14	Sta. 371+18.86
℄ Pier C7	Sta. 365+41.27	℄ Pier C15	Sta. 372+11.21
℄ Pier C8	Sta. 366+26.27	℄ Pier C16	Sta. 373+03.56
℄ Pier C9	Sta. 366+94.27	℄ Pier C17	Sta. 373+58.38

Notes:

1. Stationing along ℄ I-290 is for information only.
2. Existing profile of EB I-290 (Congress) from Pier C4 to Pier C12 is based on a field survey by Dynasty Group, Inc. on 09-18-2015. Existing profile grade is to remain unchanged.

EXISTING PROFILE GRADE

(Along a Line 27' S. of ℄ I-290.

① 32'-10 7/16"
② 27'-10 5/16"
③ Line perp. to ℄ I-290
④ 26'-4 15/16"
⑤ 24'-11 7/16"

EXISTING PROFILE GRADE STATIONS AND ELEVATIONS

PVI Sta.	Elev.	PVI Sta.	Elev.	PVI Sta.	Elev.	PVI Sta.	Elev.	PVI Sta.	Elev.	PVI Sta.	Elev.
362+98.58	612.39	364+80.00	612.97	366+70.00	612.62	368+60.00	611.99	370+50.00	611.18	372+40.00	610.45
363+00.00	612.40	364+90.00	612.97	366+80.00	612.58	368+70.00	611.95	370+60.00	611.14	372+50.00	610.47
363+10.00	612.48	365+00.00	612.97	366+90.00	612.55	368+80.00	611.90	370+70.00	611.09	372+60.00	610.49
363+20.00	612.55	365+10.00	612.97	367+00.00	612.52	368+90.00	611.86	370+80.00	611.04	372+70.00	610.53
363+30.00	612.62	365+20.00	612.96	367+10.00	612.50	369+00.00	611.81	370+90.00	610.99	372+80.00	610.55
363+40.00	612.67	365+30.00	612.95	367+20.00	612.48	369+10.00	611.77	371+00.00	610.93	372+90.00	610.59
363+50.00	612.71	365+40.00	612.94	367+30.00	612.44	369+20.00	611.72	371+10.00	610.88	373+00.00	610.62
363+60.00	612.75	365+50.00	612.92	367+40.00	612.41	369+30.00	611.68	371+20.00	610.83	373+10.00	610.65
363+70.00	612.77	365+60.00	612.91	367+50.00	612.38	369+40.00	611.63	371+30.00	610.78	373+20.00	610.68
363+80.00	612.79	365+70.00	612.90	367+60.00	612.35	369+50.00	611.60	371+40.00	610.73	373+30.00	610.70
363+90.00	612.82	365+80.00	612.89	367+70.00	612.31	369+60.00	611.56	371+50.00	610.68	373+40.00	610.71
364+00.00	612.86	365+90.00	612.87	367+80.00	612.27	369+70.00	611.52	371+60.00	610.63	373+50.00	610.71
364+10.00	612.89	366+00.00	612.86	367+90.00	612.23	369+80.00	611.47	371+70.00	610.58	373+59.71	610.69
364+20.00	612.91	366+10.00	612.84	368+00.00	612.18	369+90.00	611.43	371+80.00	610.54		
364+30.00	612.93	366+20.00	612.81	368+10.00	612.14	370+00.00	611.38	371+90.00	610.51		
364+40.00	612.94	366+30.00	612.78	368+20.00	612.10	370+10.00	611.34	372+00.00	610.49		
364+50.00	612.95	366+40.00	612.74	368+30.00	612.07	370+20.00	611.30	372+10.00	610.47		
364+60.00	612.96	366+50.00	612.69	368+40.00	612.04	370+30.00	611.26	372+20.00	610.45		
364+70.00	612.96	366+60.00	612.65	368+50.00	612.02	370+40.00	611.22	372+30.00	610.44		

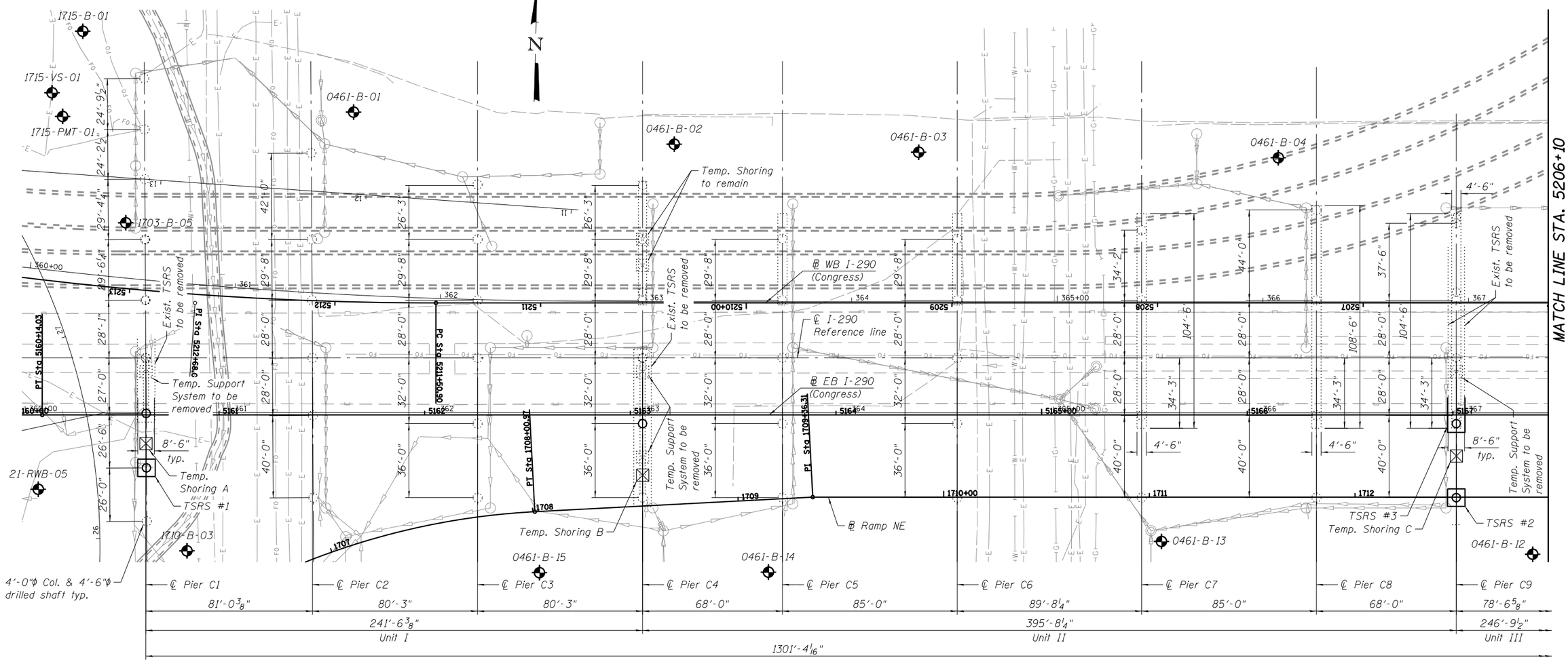

SUBSTRUCTURE LAYOUT PLAN - 1

LEGEND:

- Water Line
- Electric
- Gas
- Telephone line
- Television line
- Combined Sewer
- Storm Sewer
- Soil Boring Location
- Temporary support system or temporary shoring

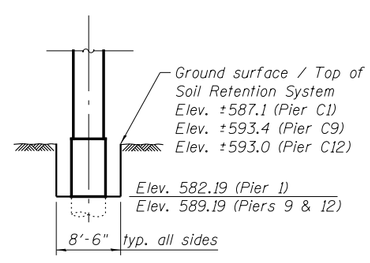

ELEVATION -TEMPORARY SOIL RETENTION SYSTEMS #1, #2 & #4

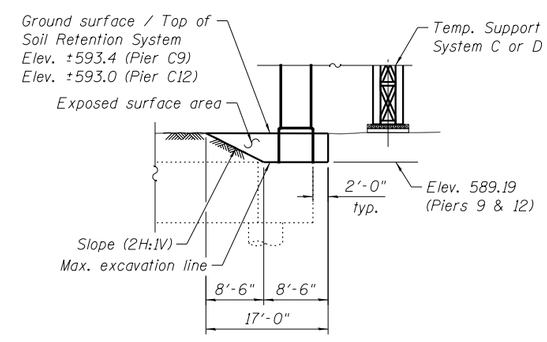

ELEVATION - TEMPORARY SOIL RETENTION SYSTEMS #3 & #5

Notes:

1. Temporary Soil Retention System required for existing pier removal and Temporary Support System. See sheets S2-10 thru S2-15.
2. Removal of Existing Temporary Soil Retention System shall be included in the cost of Removal of Temporary Soil Retention System.
3. Removal of Existing Support System on Piers C9 and C12 shall be included in the cost of Concrete Removal. Removal of Existing Temporary Support System on Piers C1 and C4 shall be included in the cost of Removal of Existing Structures No. 2.
4. A cantilever sheet piling design does not appear feasible and additional members or other retention systems may be necessary. The Contractor shall submit a temporary soil retention system design including plan details and calculations for review and acceptance by the Engineer.
5. The Contractor shall take precautions to protect existing utilities and foundations during construction of the bridge. The utilities were located based on SUE and utility supplier information available at design.
6. Temporary soil retention system shall avoid existing roadway drainage.
7. Work this sheet with S2-09.

BILL OF MATERIAL

Item	Unit	Total
Temporary Soil Retention System	Sq. Ft.	711
Removal of Temporary Soil Retention System	Sq. Ft.	3,916