STATE OF ILLINOIS
DEPARTMENT OF TRANSPORTATION

| F.A.I. RTE. | SECTION | COUNTY | TOTAL SHEETS | SHEET NO. |
|---|---|---|---|---|
| 90/94 | * | COOK | 556 | 382 |
| STA. | | TO STA. | | |
| FED. ROAD DIST. NO. 1 | ILLINOIS | FED. AID PROJECT | | |

* (1818, ETC, 2324.6-1P)R-8 62300

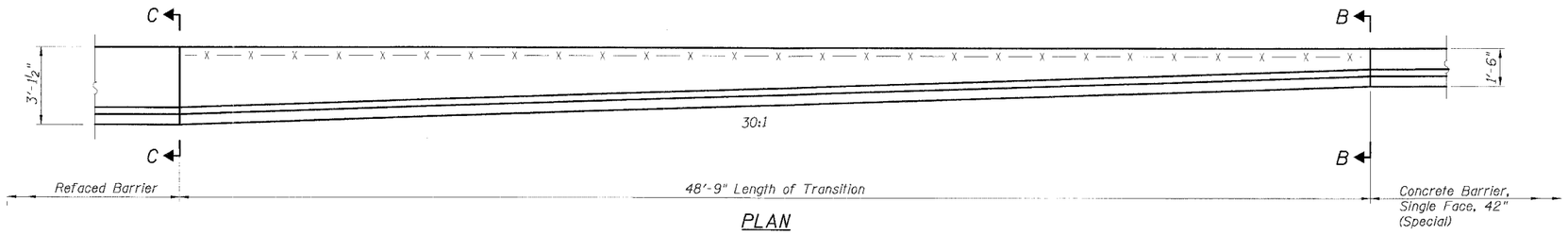


PLAN

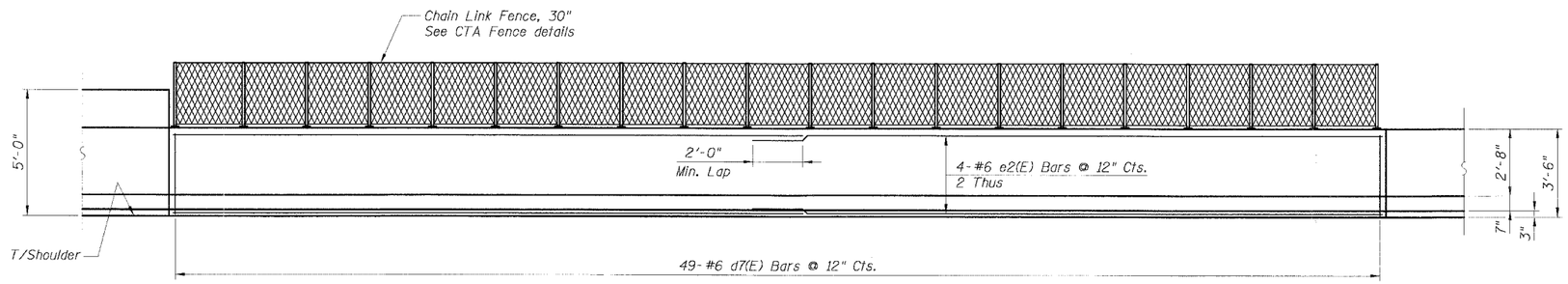


ELEVATION

## BILL OF MATERIAL

| Bar | No. | Size | Length | Shape |
|---|---|---|---|---|
| a2(E) | 6 | #5 | 25'-3" | |
| d7(E) | 49 | #6 | 6'-9" | |
| e2(E) | 8 | #6 | 25'-3" | |

| Item | Unit | Quantity |
|---|---|---|
| Reinforcement Bars, Epoxy Coated | Lbs. | 1,030 |
| Concrete Structures | Cu. Yd. | 11.7 |
| Protective Coat | Sq. Yd. | 28.5 |

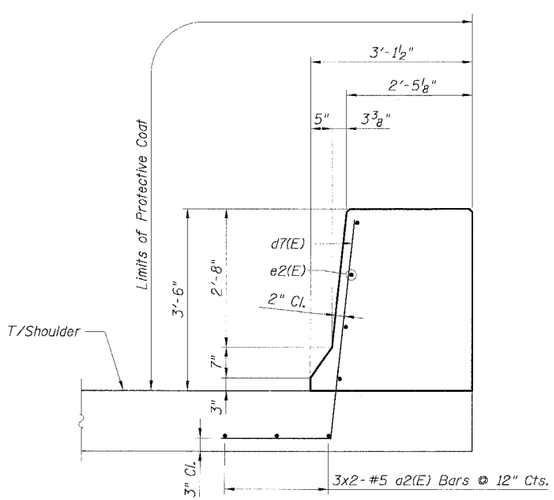


SECTION C-C

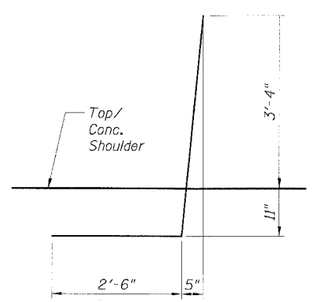


d7(E) BAR

## NOTES:

1. Provide joints in facing to match those in the Existing Barrier.
2. For Refaced Barrier details, see Sheets B2 and B3.
3. For Concrete Barrier, Single Face, 42" (Special), see Civil details.
4. For locations of Transition, see Roadway Plans.

Sheet B14 of 16

CTE | AECOM
CTE
300 East Randolph Drive, Suite 400, Chicago, Illinois 60601-5216
T 312.938.0300 F 312.938.1009 www.cte.aecom.com

| REVISIONS | |
|---|---|
| NAME | DATE |

ILLINOIS DEPARTMENT OF TRANSPORTATION
F.A.I. 90/94 (DAN RYAN EXPRESSWAY)
EXISTING BARRIER WALL MODIFICATIONS AT CTA STATIONS
PROPOSED T/SHOULDER BELOW EXISTING REFACED BARRIER TO NEW 42" BARRIER TRANSITION DETAILS

SCALE: None DRAWN BY: CHD
DATE: JULY 7, 2005 CHECKED BY: RDP

I:\P-80468-Struct\E&K_Dwgs\Cntr_62300\03_CTA-Barrier\RT09B142A-CT-A.sht
06/24/2005 02:43:45 PM