STATE OF ILLINOIS
DEPARTMENT OF TRANSPORTATION

ROUTE NO.	SECTION	COUNTY	TOTAL SHEETS	SHEET NO.
		DuPage	14	14
FED. ROAD DIST. NO. 7		ILLINOIS	FED. AID PROJECT-	

SHEET NO. 4
4 SHEETS

Contract Number: 62912

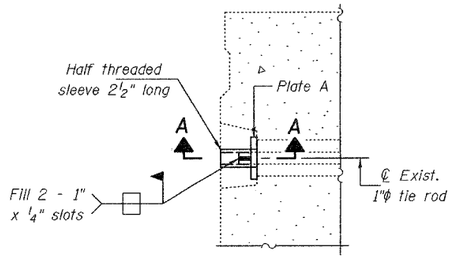

DETAIL B

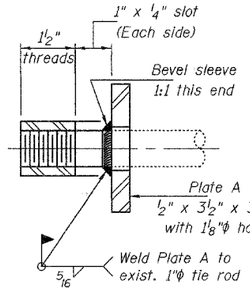

SECTION A-A
(24 Required)

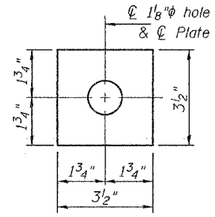

PLATE A
(24 Required)

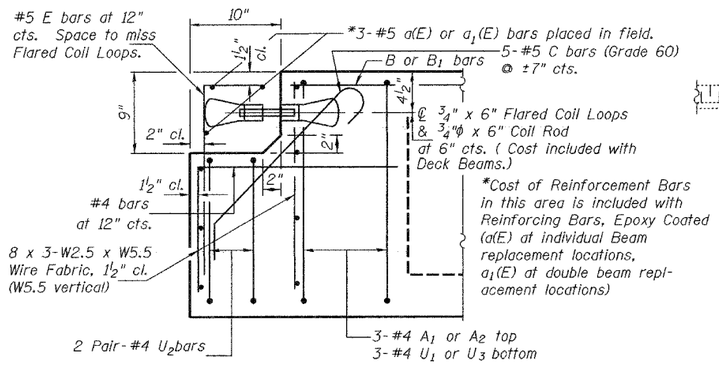

END OF BEAM (EXP. END)

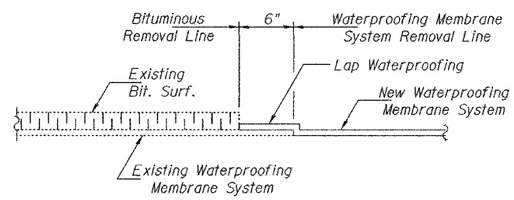

WATERPROOFING TREATMENT

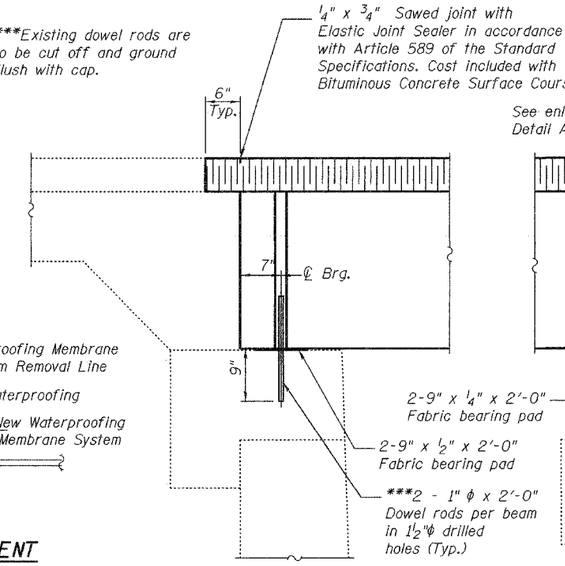

TYPICAL SECTION AT ABUTMENTS

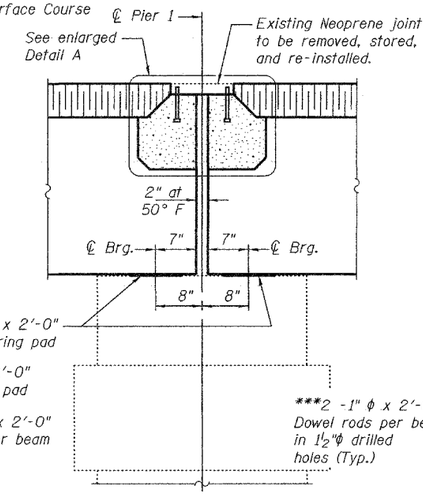

TYPICAL SECTION AT PIER 1

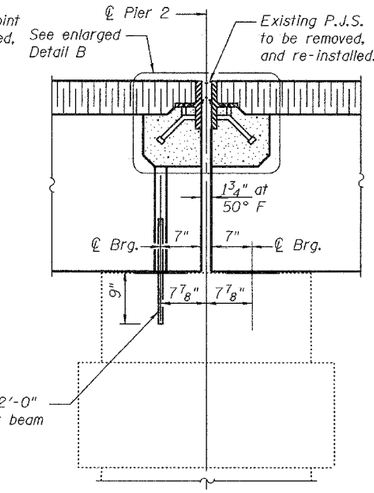

TYPICAL SECTION AT PIER 2

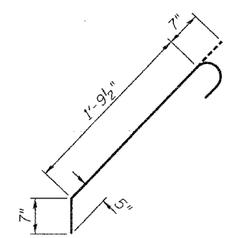

BAR C

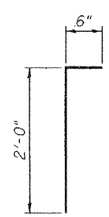

BAR E

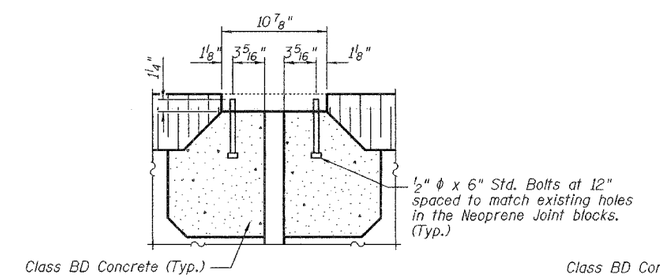

ENLARGED DETAIL A
Existing 2" Neoprene expansion joint to be removed, stored, and re-installed

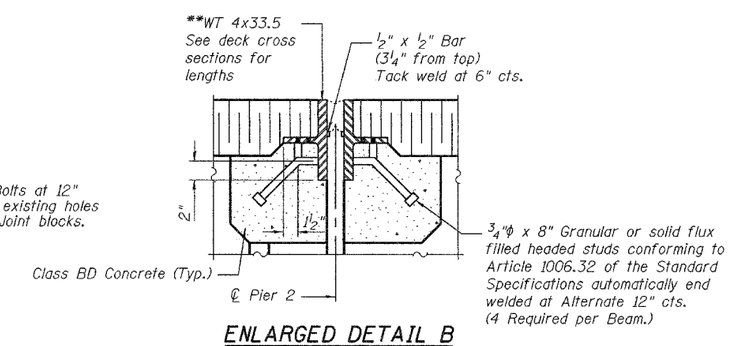

ENLARGED DETAIL B
Existing 2½" P.J.S. to be removed, stored and re-installed.
** Seal space between existing and new WT 5 x 44.5 with silicone sealant suitable for Structural Steel. Cost of silicone sealant is included with Furnishing and Erecting Structural Steel.

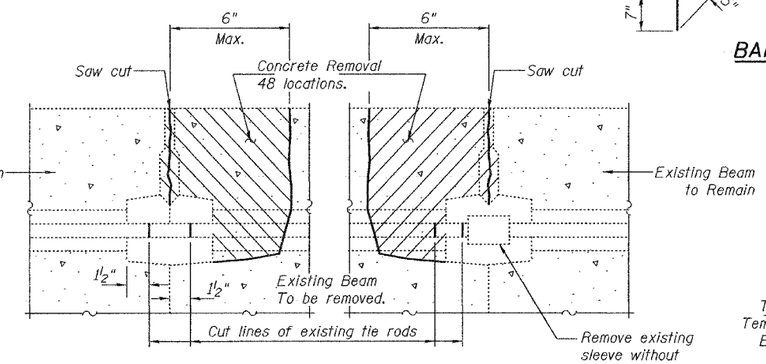

BEAM REMOVAL DETAIL
AT TRANSVERSE TIES
(Looking East)

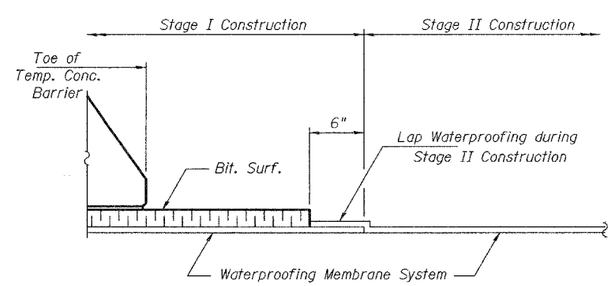

WATERPROOFING TREATMENT
AT STAGE CONSTRUCTION

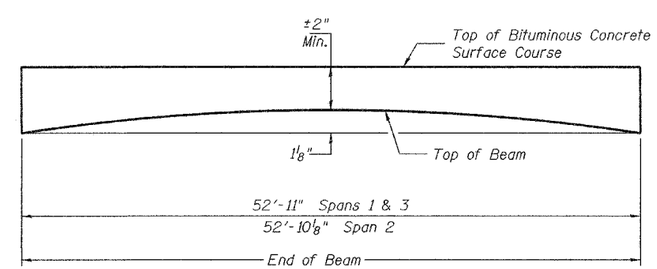

ANTICIPATED INITIAL CAMBER DIAGRAM

DESIGNED	V.H.V.
CHECKED	A.T.H.
DRAWN	Drew Christopher
CHECKED	V.H.V. A.T.H.

May 3, 2005
EXAMINED John A. Morris
ENGINEER OF STRUCTURAL SERVICES
PASSED Ralph E. Anderson
ENGINEER OF BRIDGES AND STRUCTURES

BEAM DETAILS
F.A.U. RT. 9877
OVER SALT CREEK
DUPAGE COUNTY
SN 022-0084

...\version 8 archive\0220084.dgn 5/5/2005 2:52:57 PM