STATE OF ILLINOIS
DEPARTMENT OF TRANSPORTATION

ROUTE NO.	SECTION	COUNTY	TOTAL SHEETS	SHEET NO.
SBI 88	103C-BR	BUREAU	51	16
FED.ROAD DIST.NO.		ILLINOIS	PROJECT	

Sheet No. 5 of 16 Sheets

CONTRACT #64423

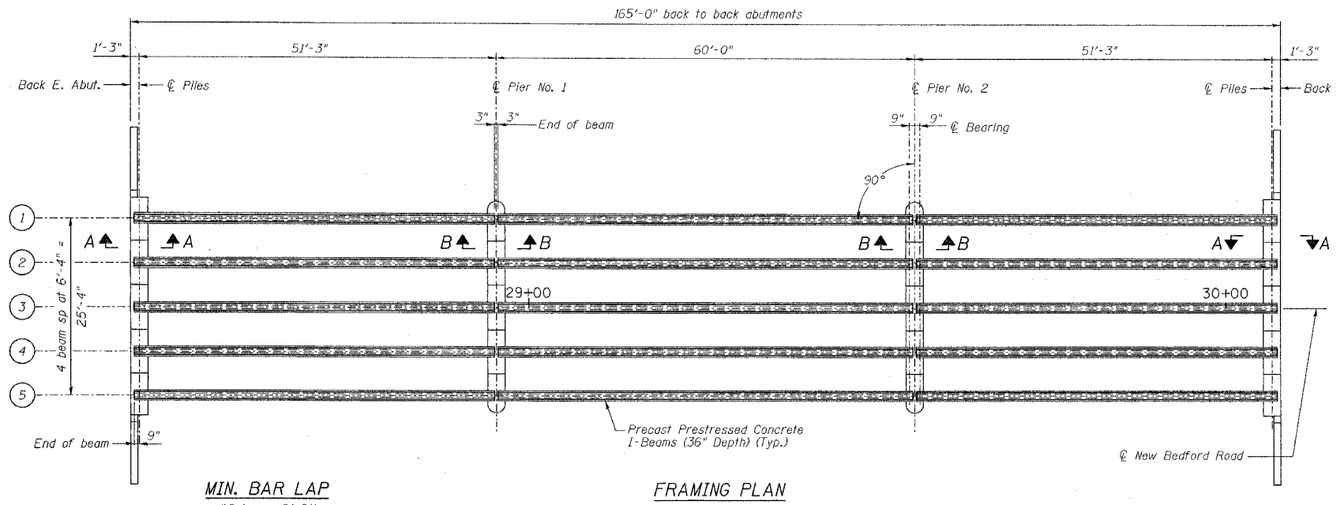

MIN. BAR LAP
#6 bar = 2'-9"

FRAMING PLAN

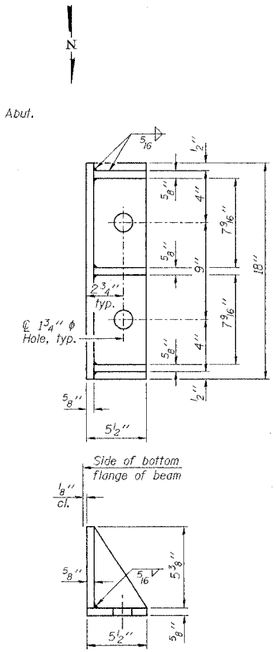

SIDE RETAINER
Equivalent rolled angle with stiffeners will be allowed in lieu of welded plates.

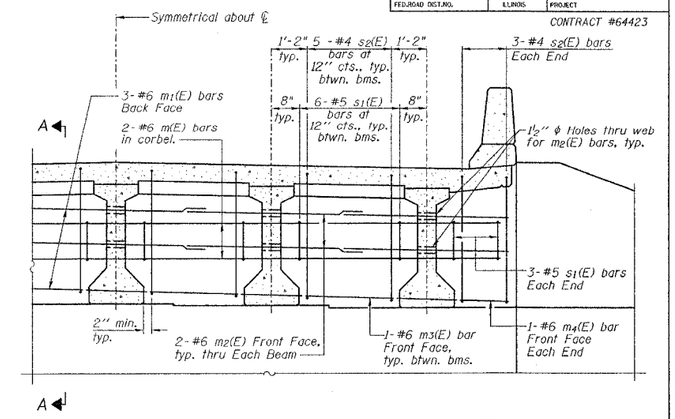

DIAPHRAGM ELEVATION AT ABUTMENT

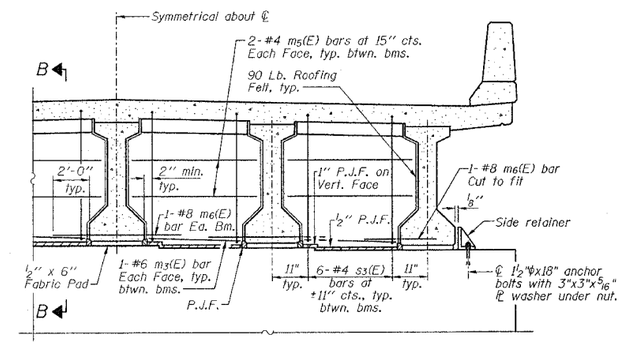

DIAPHRAGM AT PIER

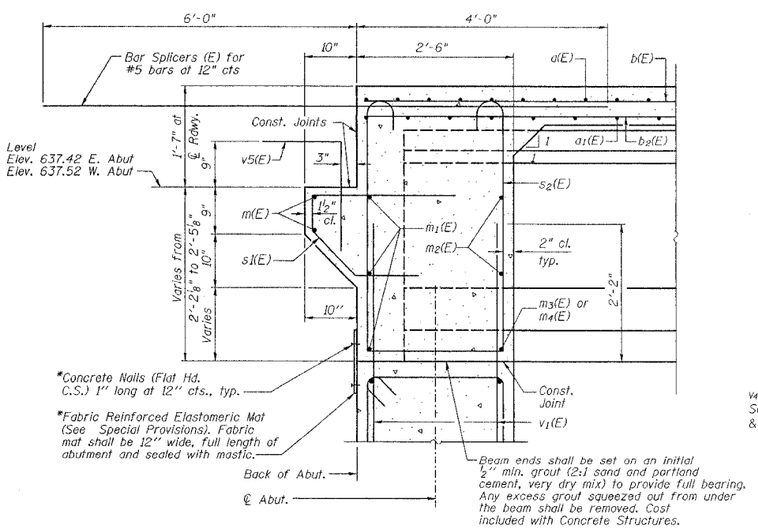

SECTION A-A
*Cost included with Concrete Structures.

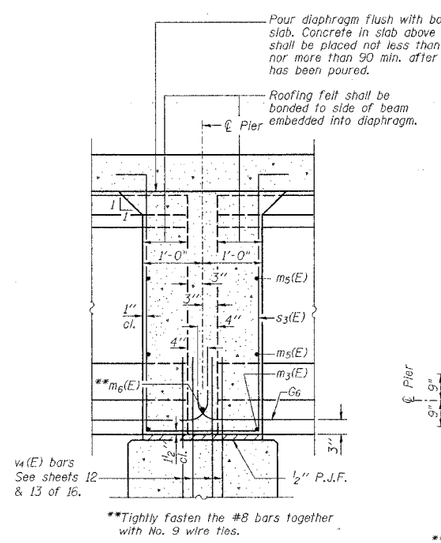

**Tightly fasten the #8 bars together with No. 9 wire ties.

SECTION B-B
Dimensions along ℄ of beam, except as shown.

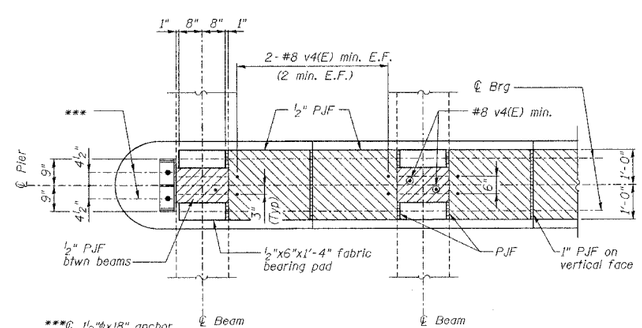

PLAN AT PIER
(Showing bearing pad and PJF details)

Notes:
Reinforcement bars in diaphragm are billed with superstructure on sheet 6 of 16.
Concrete in diaphragm is included with Concrete Superstructure on sheet 6 of 16.
Cost of 90 Lb. roofing felt is included with Concrete Superstructure.
The side retainer shall be galvanized after shop fabrication according to AASHTO M 111 and ASTM A 385. Cost of side retainer and anchor bolts shall be included with Concrete Structures.
See sheet 9 of 16 for anchor bolt details.
For details of bars s1(E), s2(E) and s3(E) see sheet 6 of 16. Spacing for these bars shall be at right angles to the beams.

NEW BEDFORD ROAD OVER GREEN RIVER

SUPERSTRUCTURE DETAILS

REVISIONS		
No.	DATE	INITIALS
1		
2		
3		
4		
5		
6		
7		
8		
9		
10		
11		
12		

STATE OF ILLINOIS
DEPARTMENT OF TRANSPORTATION
DIVISION OF HIGHWAYS

SBI 88 SPUR — SECTION 103C-BR
SN 006-0163
STA 29+25.34 — BUREAU COUNTY

HOMER L. CHASTAIN & ASSOCIATES, LLP
CONSULTING ENGINEERS
184-001397

	DATE
DRAWN BY: R King	4/04
CHECKED BY: CMV	4/04
QA/QC BY: CWC	4/04
BOOK NUMBER	
PROJECT No. 4858-1	
SHEET No.	

PI-2DI 9-1-03