STATE OF ILLINOIS
DEPARTMENT OF TRANSPORTATION

ROUTE NO.	SECTION	COUNTY	TOTAL SHEETS	SHEET NO.
SBI 88	103C-BR	BUREAU	51	21
FED.ROAD DIST.NO.		ILLINOIS	PROJECT	

Sheet No. 10 of 16 Sheets

CONTRACT #64423

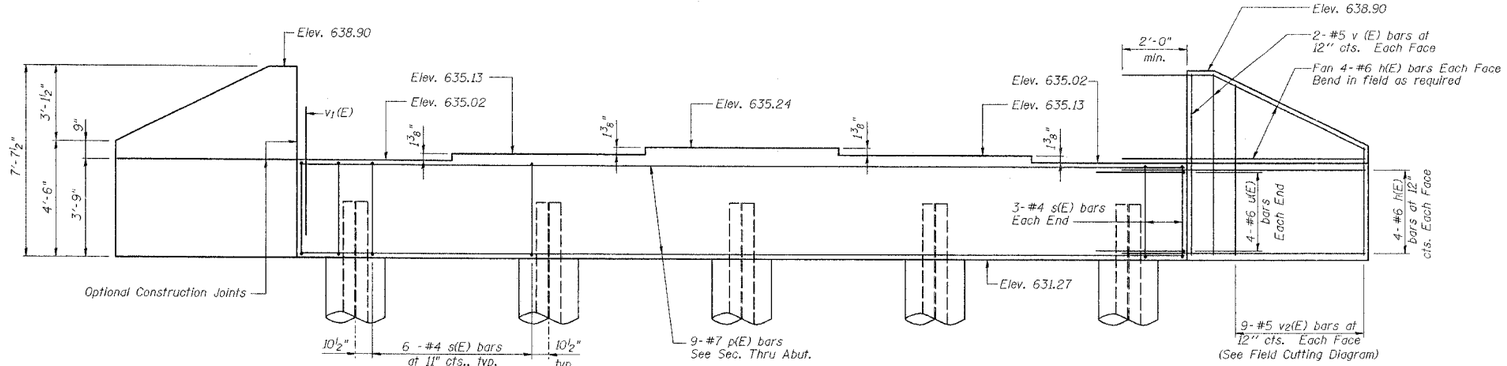

ELEVATION
(Looking at front face)

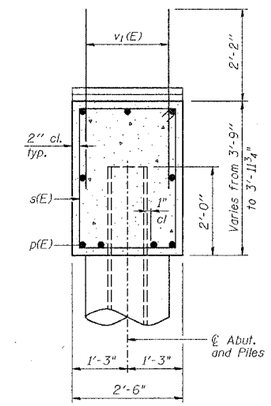

SECTION THRU ABUTMENT

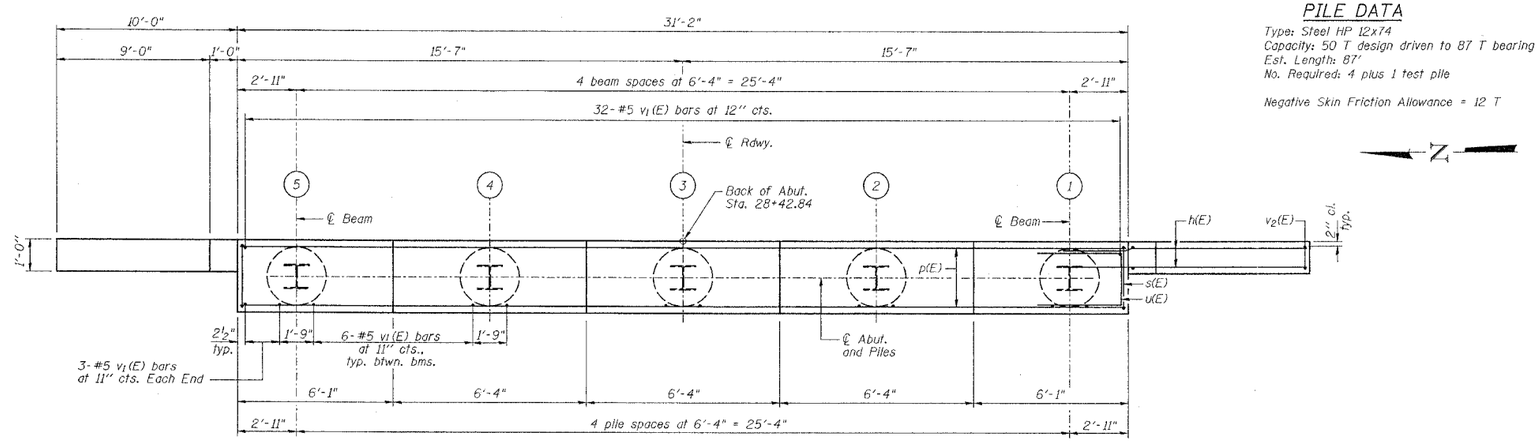

PLAN

PILE DATA

Type: Steel HP 12x74
Capacity: 50 T design driven to 87 T bearing
Est. Length: 87'
No. Required: 4 plus 1 test pile

Negative Skin Friction Allowance = 12 T

BILL OF MATERIAL

Bar	No.	Size	Length	Shape
h(E)	32	#6	12'-4"	
p(E)	9	#7	30'-10"	
s(E)	30	#4	11'-11"	
u(E)	8	#6	11'-3"	
v(E)	8	#5	7'-4"	
v1(E)	62	#5	4'-4"	
v2(E)	18	#5	11'-3"	
Concrete Structures			Cu. Yd.	13.8
Reinforcement Bars, Epoxy Coated			Pound	2090
Structure Excavation			Cu. Yd.	87
Test Pile Steel HP12x74			Each	1
Furnishing Steel Piles HP12x74			Foot	348
Driving Steel Piles			Foot	348

NOTES

Pour steps monolithically with cap.

Reinforcement bars designated (E) shall be epoxy coated.

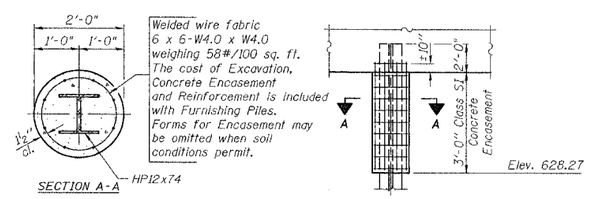

PILE ENCASEMENT DETAIL

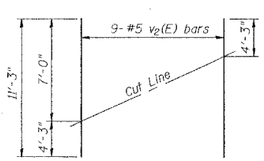

FIELD CUTTING DIAGRAM

Order v2(E) full length. Cut as shown and use remainder of bars in opposite face.

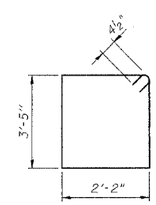

BAR s(E)

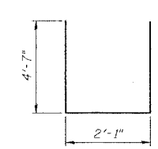

BAR u(E)

NEW BEDFORD ROAD OVER GREEN RIVER

EAST ABUTMENT DETAILS

REVISIONS		
No.	DATE	INITIALS
1		
2		
3		
4		
5		
6		
7		
8		
9		
10		
11		
12		

STATE OF ILLINOIS
DEPARTMENT OF TRANSPORTATION
DIVISION OF HIGHWAYS

SBI 88 SPUR — SECTION 103C-BR
SN 006-0163
STA 29+25.34 — BUREAU COUNTY

HOMER L. CHASTAIN & ASSOCIATES, LLP
CONSULTING ENGINEERS
184-001397

	DATE
DRAWN BY: R King	4/04
CHECKED BY: CMV	4/04
QA/QC BY: BWP	4/04
BOOK NUMBER	
PROJECT No.	4858-1
SHEET No.	