FAP ROUTE	SECTION	COUNTY	TOTAL SHEETS	SHEET NO
325	113RS-2	JERSEY	8	4
STA. _____		TO STA. _____		
CONTRACT NUMBER:		76937		

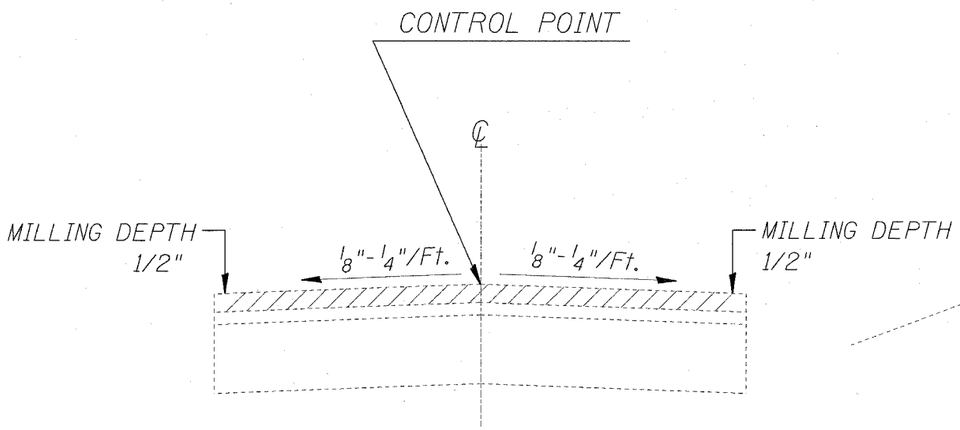

MILLING DETAIL

M.S. 15.59 TO M.S. 16.01
M.S. 16.06 TO M.S. 17.35
M.S. 17.39 TO M.S. 17.67
M.S. 17.67 TO M.S. 22.79

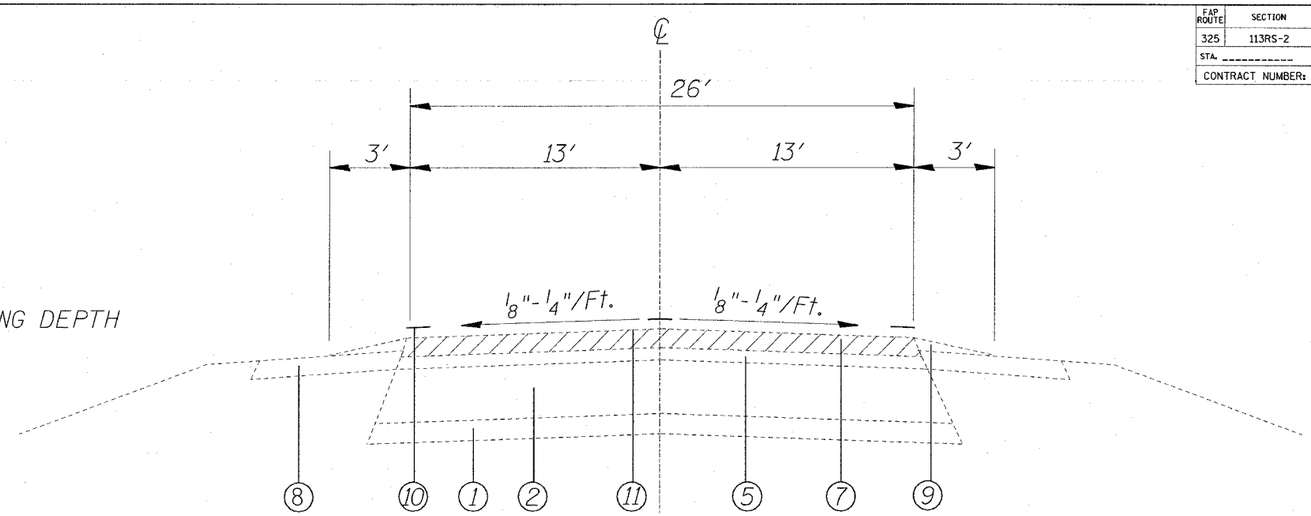

EXISTING TYPICAL SECTION

M.S. 15.59 TO M.S. 16.01
M.S. 16.06 TO M.S. 17.35
M.S. 17.39 TO M.S. 17.67

LEGEND

1. EXISTING 4" SUB-BASE GRANULAR MATERIAL, TYPE A
2. EXISTING 6" BITUMINOUS BASE COURSE
3. EXISTING PAVEMENT 9"-6"-9"
4. EXISTING BITUMINOUS BASE COURSE WIDENING, 9"
5. EXISTING RESURFACING
6. EXISTING STRIP REFLECTIVE CRACK CONTROL TREATMENT
7. EXISTING BITUMINOUS CONCRETE SURFACE COURSE, MIXTURE "D" CLASS I, T2 1 1/2"
8. EXISTING AGGREGATE SHOULDERS TYPE A, 6"
9. EXISTING AGGREGATE WEDGE
10. EXISTING PAVEMENT MARKINGS
11. PROPOSED BITUMINOUS SURFACE REMOVAL 1/2"

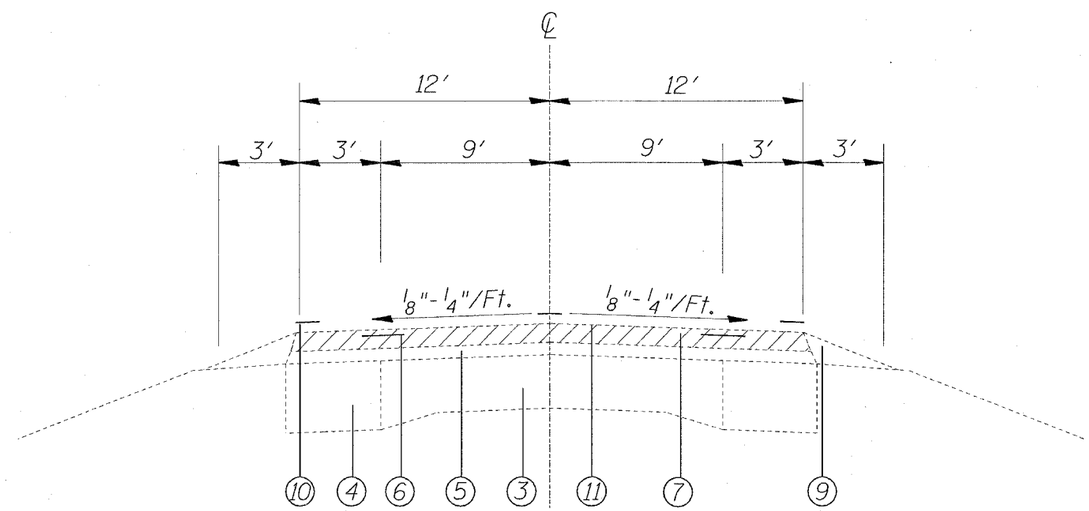

EXISTING TYPICAL SECTION

M.S. 17.67 to M.S. 22.79

REVISIONS	
NAME	DATE

ILLINOIS DEPARTMENT OF TRANSPORTATION

EXISTING TYPICAL SECTIONS

FAP ROUTE 325 (IL 16)
SECTION 113RS-2
JERSEY COUNTY

DRAWN BY:

PLOT DATE: *DATE-TIME*

PLAN		DATE
NOTE BOOK NO.	SURVEYED	
	PLOTTED	
	ALIGNMENT CHECKED	
	PT. OF WAY CHECKED	
	CADD FILE NAME	

DATE
DATE-TIME
CTU-SPEC
REF
REF