ROUTE	SECTION	COUNTY	TOTAL SHEETS	SHEET NO.
*	**	***	25	7
STA.		TO STA.		
FED. ROAD DIST. NO. _	ILLINOIS	FED. AID PROJECT ****		

* FAI 55/70
** DIST 8 ITS 2006-1
*** MADISON & ST. CLAIR

CONTRACT# 76966

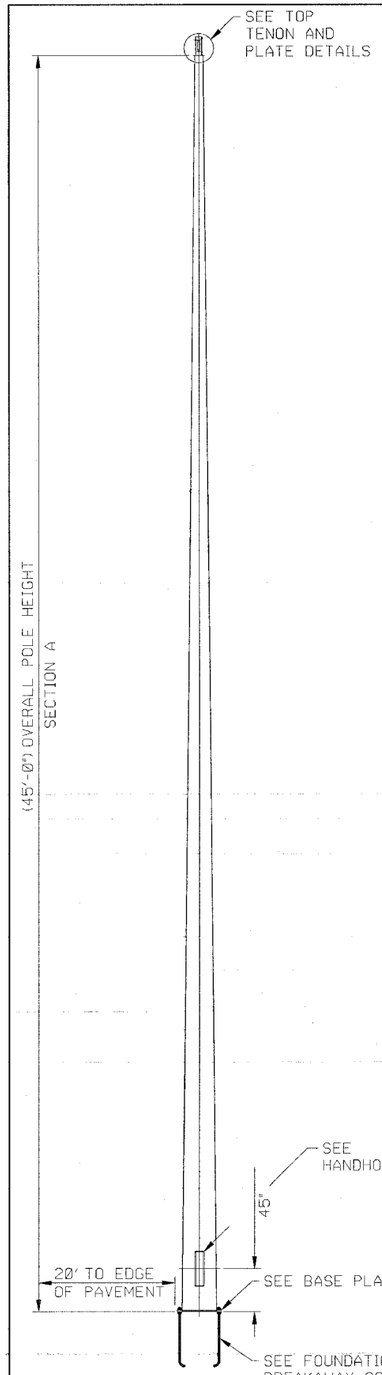

WIND VELOCITY: 30 MPH W/NO GUST
1" MAXIMUM POLE TOP DEFLECTION

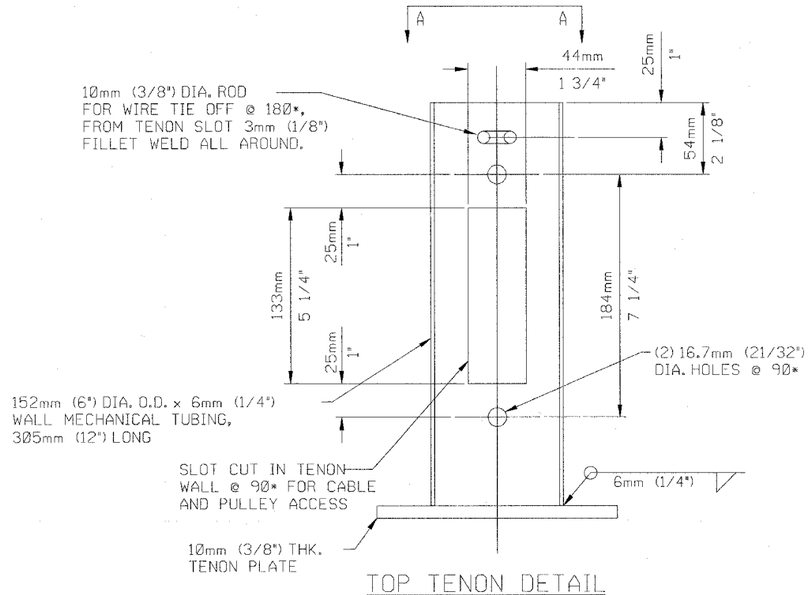

TOP TENON DETAIL

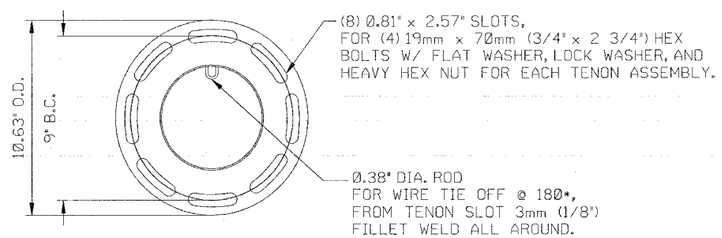

TENON PLATE DETAIL

NOTES:

1) POLE TUBE	ASTM A572, GR. 50 MIN.
2) BASE PLATE	ASTM A572, GR. 50.
3) HANDHOLE FRAME	ASTM A500, GR B TUBING.
4) HANDHOLE COVER	ASTM A36 MIN.
5) ANCHOR BOLTS	ASTM F1554, GR. 55, TOP H.D. GALVANIZED TO ASTM A153.
6) ANCHOR NUTS	ASTM A563, GR. DH or A194, GR. 2H, H.D. GALVANIZED TO ASTM A153.
7) ANCHOR WASHERS	ASTM F436, TYPE 1, H.D. GALVANIZED TO ASTM A153.
8) TOP PLATE	ASTM A572, GR. 50.
9) TENON	ASTM A53, GR. B PIPE.
10) TENON SLEEVE	ASTM A512 OR A513.
11) WELDING	AWS D1.1.
12) FINISH	H.D. GALVANIZED TO ASTM A123.
13) POLE CAP	CAST ALUMINUM OR GALVANIZED STEEL.

14) VALUE STRUCTURES, INC., IS CERTIFIED BY A.I.S.C. FOR CONVENTIONAL STEEL BUILDING STRUCTURES, SIMPLE STEEL CONVENTIONAL STEEL BUILDING STRUCTURES, SIMPLE STEEL BRIDGES, WITH FRACTURE CRITICAL ENDORSEMENT.

DESIGN NOTE:
CCTV POLES AND ANCHORAGE ARE ALL DESIGNED TO ACCEPT MAXIMUM LOADING FROM CAMERAS, STATIONARY ARMS AND LOWERING DEVICES. THE COMBINATION OF CAMERA AND LOWERING DEVICE ASSEMBLY OF 3.0 SQ. FT. EPA AND 130 LBS DEADLOAD RESULTING IN THE LARGEST AREA AND WEIGHT FOR POLE DESIGN TO THE FOLLOWING LOADING CASES; ALL PER AASHTO 2001 STANDARD SPECIFICATIONS FOR STRUCTURAL SUPPORTS FOR HIGHWAY SIGNS, LUMINAIRES, AND TRAFFIC SIGNALS, 4TH EDITION.

LOAD CASE 1
80 MPH AASHTO

LOAD CASE 2
30 MPH SUSTAINED WIND FOR MAXIMUM HORIZONTAL DEFLECTION @ POLE TOP NOT TO EXCEED 1".

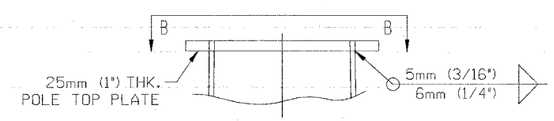

POLE TOP DETAIL

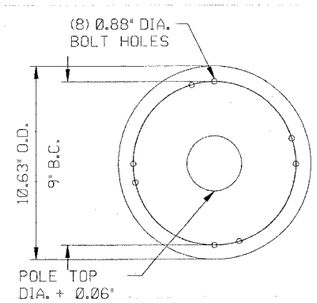

SECTION B-B
TOP PLATE DETAIL

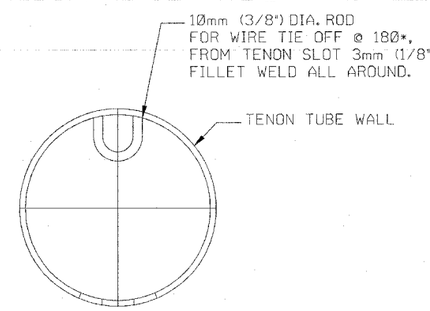

SECTION A-A
WIRE TIE OFF ORIENTATION DETAIL

REVISIONS	
NAME	DATE

ILLINOIS DEPARTMENT OF TRANSPORTATION
POLE MOUNTED CCTV DETAIL WITH CAMERA LOWERING DEVICE 2 OF 3
FAI 55/70
SECTION DIST 8 ITS 2006-1
MADISON AND ST. CLAIR COUNTY

SCALE:
DATE 05/02/05
DRAWN BY MAM
CHECKED BY CAF