F.A.P. ROUTE	COUNTY SECTION	COUNTY	TOTAL SHTS.	SHEET NO.
336	99-00243-00-PV CONTRACT NO. 83782	KANE	268	151
LIGHT STANDARDS				
F.H.W.A. REG.5	ILLINOIS	PROJECT F-0336(008)		

LIGHT POLE, ALUMINUM, 40 FT. MOUNTING HEIGHT, 15 FT. MAST ARM

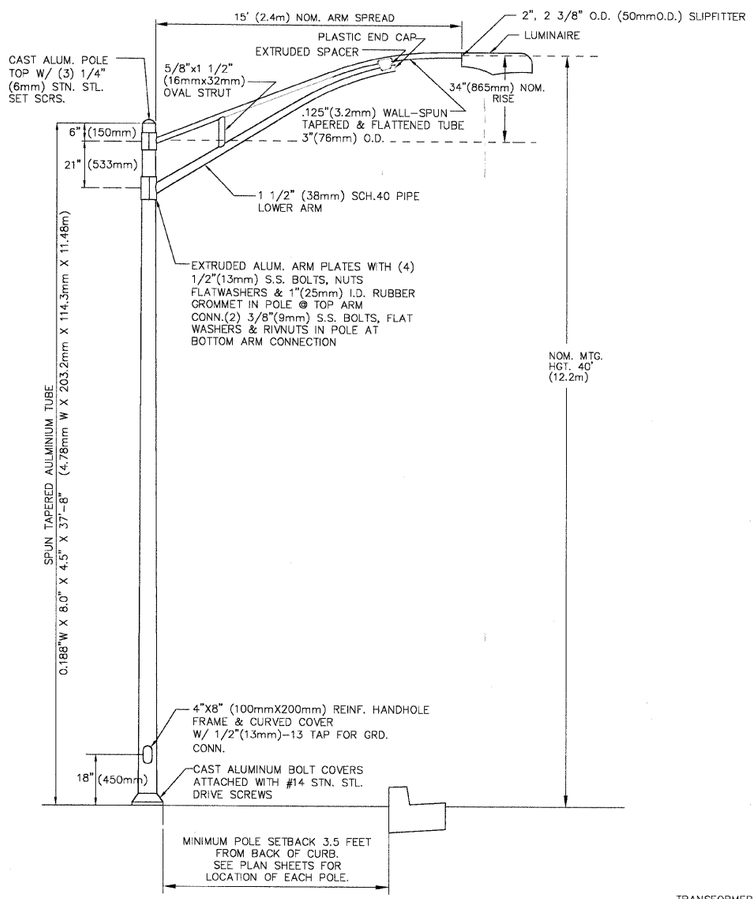

GENERAL DESIGN CRITERIA:

1. POLES & ARMS HEAT TREATED TO – T6 TEMPER AFTER WELDING.
2. POLES TO BE PAPER WRAPPED C/W RIP CORD FOR EASY REMOVAL.
3. FINISH: POLES AND ARMS – POWDERCOAT DARK BRONZE
4. DESIGNED IN ACCORDANCE WITH 1985 AASHTO FOR 80 M.P.H. WIND ZONE

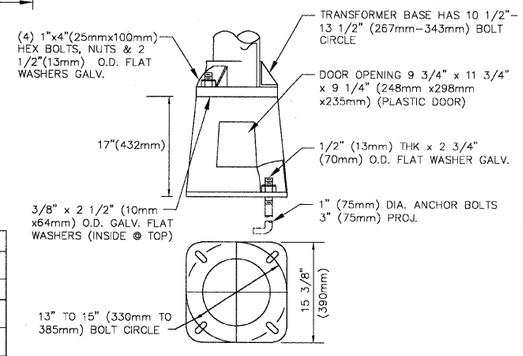

TRANSFORMER BASE DETAIL

MATERIAL SPECIFICATIONS	
POLE & ARM TUBES	ASTM-B429 (6063-T6) OR B241
EXTRUSIONS	ASTM-B308 (6063-T6)
CAST H.H. FRAME & BASE	ASTM-B108 (356-T6)
CAST – TOP & BOLT COVERS	43,319 OR 356 ALLOY
SMALL HARDWARE	AISI-300 SERIES (STN.STL.)
ANCHOR BOLTS	ASTM-A36 M55

LIGHT POLE, ALUMINUM, 40 FT. MOUNTING HEIGHT, 15 FT. MAST ARM WITH FESTOON OUTLET

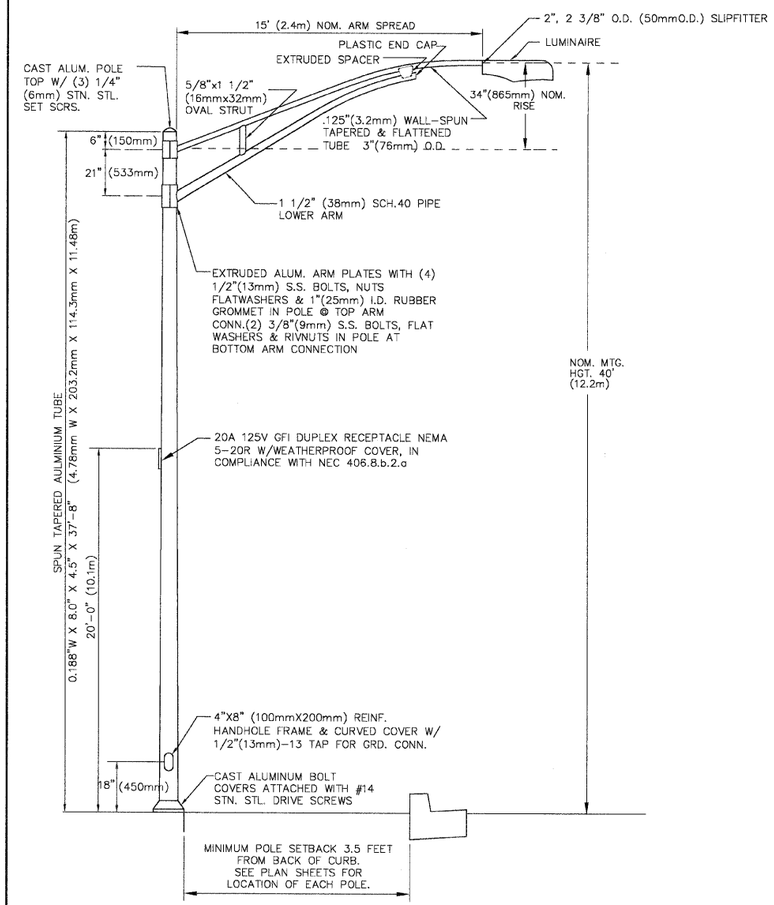

GENERAL DESIGN CRITERIA:

1. POLES & ARMS HEAT TREATED TO – T6 TEMPER AFTER WELDING.
2. POLES TO BE PAPER WRAPPED C/W RIP CORD FOR EASY REMOVAL.
3. FINISH: POLES AND ARMS – POWDERCOAT DARK BRONZE
4. DESIGNED IN ACCORDANCE WITH 1985 AASHTO FOR 80 M.P.H. WIND ZONE

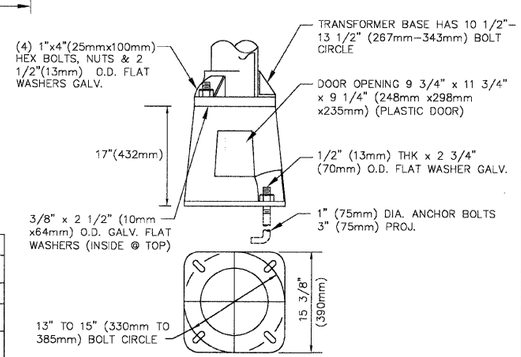

TRANSFORMER BASE DETAIL

MATERIAL SPECIFICATIONS	
POLE & ARM TUBES	ASTM-B429 (6063-T6) OR B241
EXTRUSIONS	ASTM-B308 (6063-T6)
CAST H.H. FRAME & BASE	ASTM-B108 (356-T6)
CAST – TOP & BOLT COVERS	43,319 OR 356 ALLOY
SMALL HARDWARE	AISI-300 SERIES (STN.STL.)
ANCHOR BOLTS	ASTM-A36 M55

REVISIONS	
NAME	DATE
PER BEO REVIEW	10-7-04
PER BEO REVIEW	12-29-04

STREET LIGHTING DETAILS

LIGHT STANDARDS

RANDALL ROAD

SCALE: NONE
DATE: 5-26-04
DRAWN BY: JMH
CHECKED BY: DAY