CONTRACT No. 91322

ROUTE NO.	SECTION	COUNTY	TOTAL SHEETS	SHEET NO.
TR352	99-24115-00-BR	SHELBY	15	12
FED. ROAD DIST. NO. 7	ILLINOIS	PROJECT		

SHEET 1 of 4

B.M. #1 - R.R. Spike top of Southwesterly most Pile of Southwest Wingwall. Elev. 654.86, STA. 9+78, 14' Lt.

EXISTING STRUCTURE NO. 087-3308:
Single span bridge with steel girders, corrugated steel deck with asphalt overlay. Closed timber abutments and wingwalls. 36'-0" Bk to Bk Abutments 23'-8" out to out width.

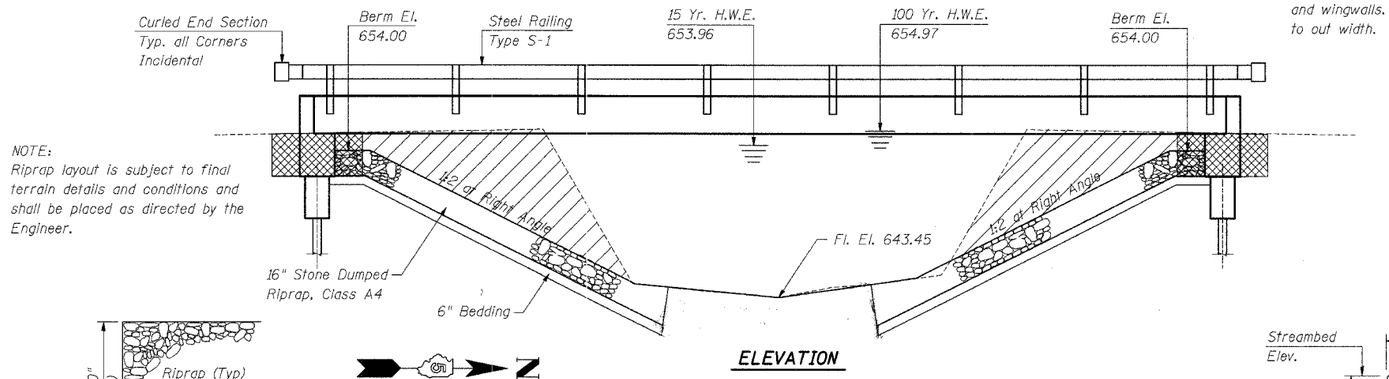

NOTE:
Riprap layout is subject to final terrain details and conditions and shall be placed as directed by the Engineer.

ELEVATION

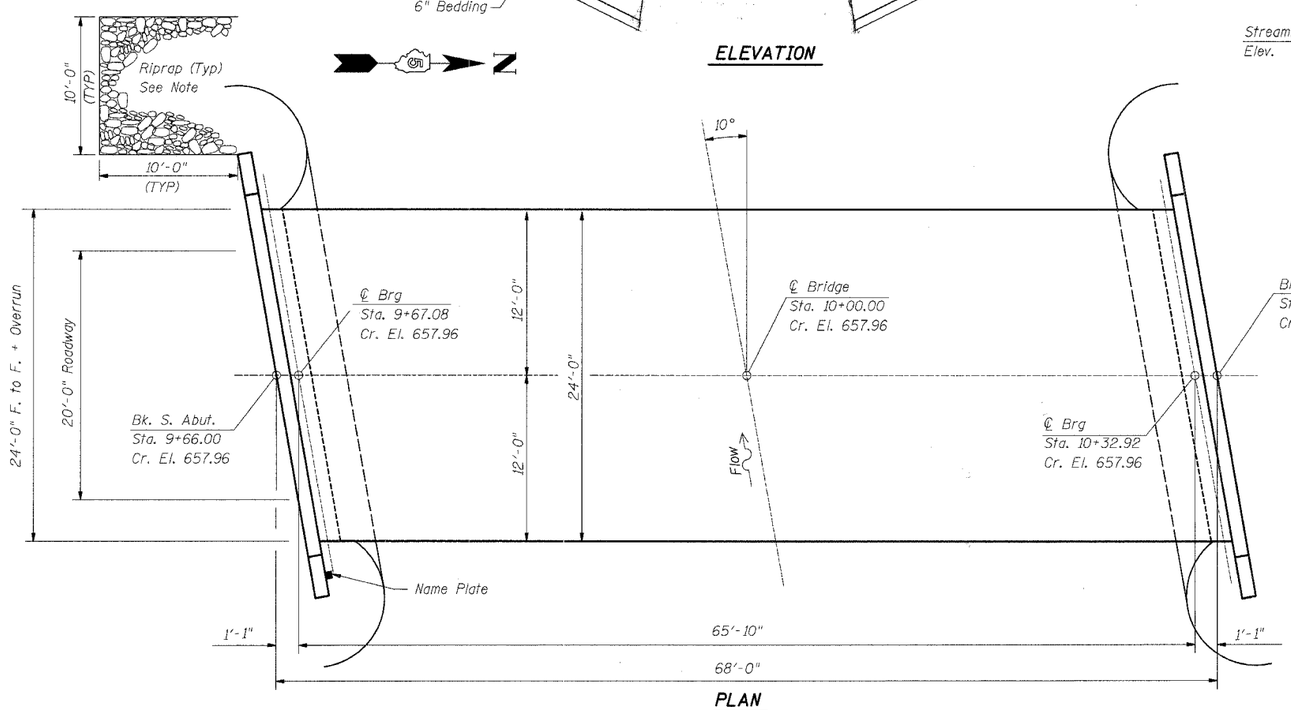

PLAN

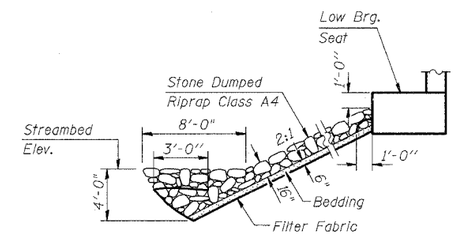

STONE RIPRAP ANCHOR DETAIL

GENERAL NOTES

See Proposal for Boring Data

The Contractor shall drive one metal shell test pile at each abutment as directed by the Engineer before ordering the remainder of the piles.

Reinforcement bars shall conform to the requirements of AASHTO M-31, M-42 or M-53 Grade 60.

SAND CREEK
BUILT 200_ BY
SHELBY COUNTY
SEC. 99-24115-00-BR
T.R. 352 STA. 10+00.00
STR. NO. 087-3513 LOADING HS 20

NAME PLATE
(See Std. 515001)

BILL OF MATERIAL

ITEM	UNIT	SUPER	SUB	TOTAL
Structure Excavation	Cu. Yd.		43	43
Concrete Structures	Cu. Yd.		22.1	22.1
Reinforcement Bars	Pound		2570	2570
Precast Prestressed Concrete Deck Beams (33" Depth)	Sq. Yd.	1584		1584
Steel Railing, Type S-1	Foot	134		134
Furnishing Metal Pile Shells	Foot		282	282
Driving and Filling Shells	Foot		282	282
Test Pile Metal Shells	Each		2	2
Concrete Encasement	Cu. Yd.		2.2	2.2
Name Plates	Each		1	1
Removal of Existing Structures	Each	1		1
Channel Excavation	Cu. Ft.		318	318
Stone Dumped Riprap, Class A4	Ton		412	412
Filter Fabric	Sq. Yd.		614	614

I certify that to the best of my knowledge, information and belief, this bridge design is structurally adequate for the design loading shown on the plans. The design is an economical one for the style of structure and complies with requirements of the current AASHTO Standard Specifications for Highway Bridges.

STATE OF ILLINOIS
DAVID BOOHER
4775
SPRINGFIELD, ILL.
LICENSED STRUCTURAL ENGINEER

5-26-05
David Booher, Illinois S.E. 081-004775 Date
Expires 11-30-2006

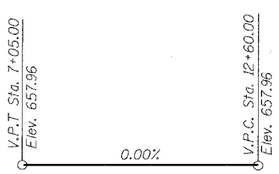

PROFILE GRADE

WATERWAY INFORMATION

Drainage Area	6.16	Sq.Mi.
Required Opening (15yr.)	365	Sq.Ft.
Provided Opening	365	Sq.Ft.
Present Opening	263	Sq.Ft.
15yr. Discharge	1549	cfs
100yr. Discharge	2512	cfs
Created Head (15yr.)	<0.5	Ft.
Created Head (100yr.)	<1.0	Ft.

DESIGN STRESSES

Precast Unit	Cast-in-Place Unit
f'c = 5,000 psi	f'c = 3500 psi
f'ci = 4000 psi	f's = 60,000 psi
f's = 270,000 psi	n = 9
f'si = 189,000 psi	

LOADING HS 20
DESIGN SPECIFICATION:
AASHTO 2002 Standard Specifications for Highway Bridges.

FUTURE WEARING SURFACE: 50 p.s.f.

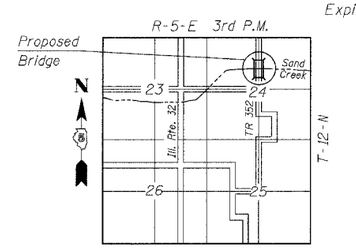

LOCATION MAP

GENERAL PLAN & ELEVATION
T.R. 352 OVER SAND CREEK
SECTION 99-24115-00-BR
SHELBY COUNTY
S.N. 087-3513
STA. 10+00.00

ie consultants

DESIGNED: D.R.B. CHECKED: D.R.B.
DRAWN: T.H.W. DATE: 5/25/05