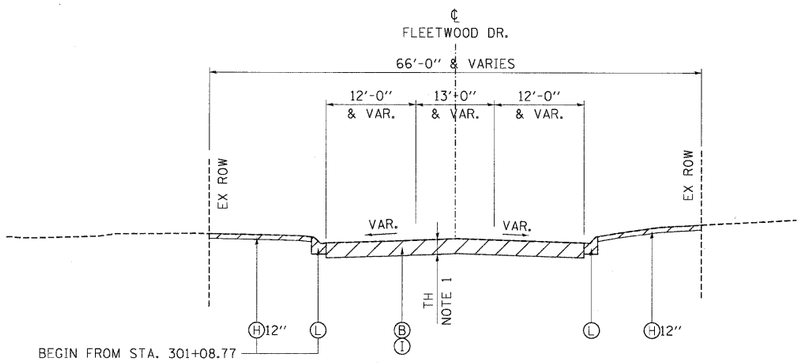

NOTE 1: TH = 6" FROM STA. 302+42.26 TO STA. 307+00.00
TH = 8" FROM STA. 307+00.00 TO STA. 309+39.00

EXISTING TYPICAL SECTION

FLEETWOOD DR.

STA. 302+42.66 TO STA. 309+38.90

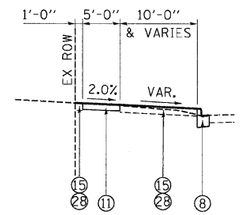

DETAIL A-1

STA. 301+08.77 TO STA. 302+42.66

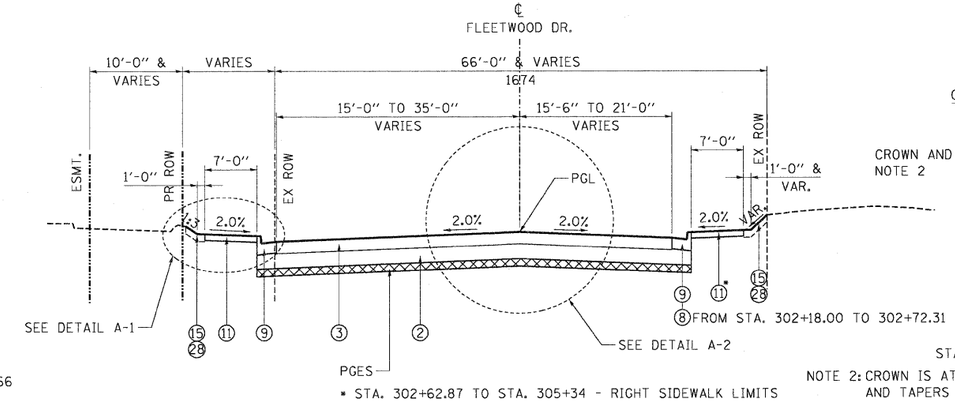

FROM STA. 302+18.00 TO 302+72.31

* STA. 302+62.87 TO STA. 305+34 - RIGHT SIDEWALK LIMITS

PROPOSED TYPICAL SECTION

FLEETWOOD DR.

STA. 301+08.77 TO STA. 305+34.00

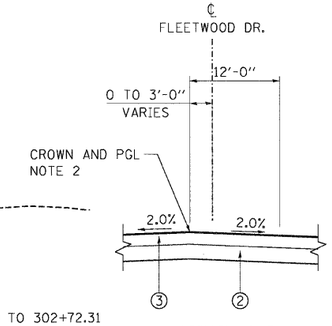

DETAIL A-2

STA. 304+96.50 TO STA. 305+34.00

NOTE 2: CROWN IS AT CENTERLINE AT 304+96.50 AND TAPERS TO 3' LT AT 305+34.00.

FLEETWOOD DR PGES LIMITS

FROM STA	TO STA	WIDTH	THICKNESS
302+42	305+00	FULL WIDTH	6"

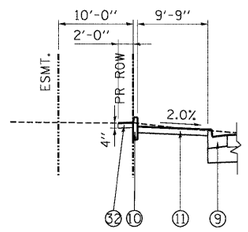

DETAIL B

STA. 306+52.59 TO STA. 307+31.89

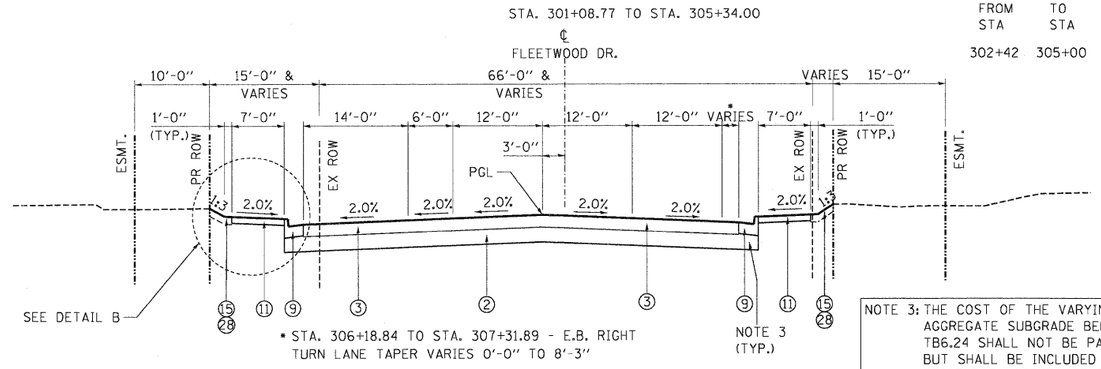

* STA. 306+18.84 TO STA. 307+31.89 - E.B. RIGHT TURN LANE TAPER VARIES 0'-0" TO 8'-3"

NOTE 3: THE COST OF THE VARYING THICKNESS OF AGGREGATE SUBGRADE BENEATH THE COMB CC&G TB6.24 SHALL NOT BE PAID FOR SEPARATELY, BUT SHALL BE INCLUDED IN THE CONTRACT UNIT PRICE FOR "AGGREGATE SUBGRADE 12".

NOTE 4: THE COST OF THE ADDITIONAL THICKNESS OF TEMPORARY PAVEMENT SHALL NOT BE PAID FOR SEPARATELY, BUT SHALL BE INCLUDED IN THE CONTRACT UNIT PRICE FOR "TEMPORARY PAVEMENT (8")".

PROPOSED TYPICAL SECTION

FLEETWOOD DR.

STA. 305+34.00 TO STA. 307+31.89

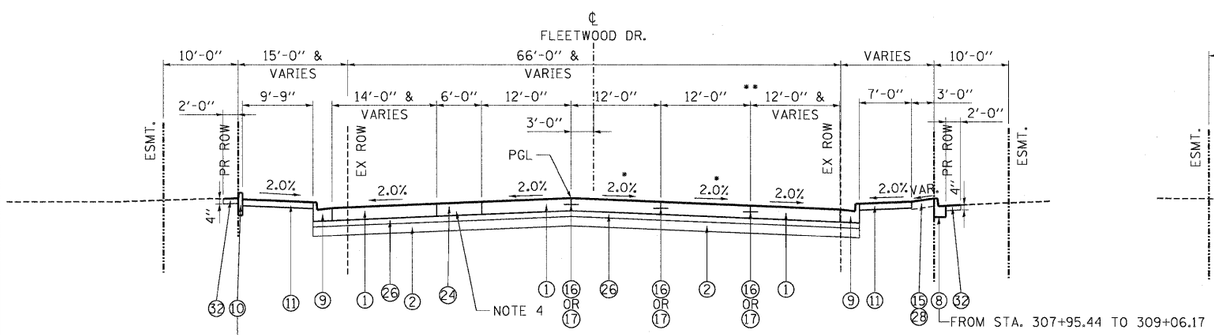

FROM STA. 307+83.84 TO STA. 308+89.08

FROM STA. 307+95.44 TO 309+06.17

* SLOPE VARIES FROM -2.0% TO -0.36% - FROM STA. 309+00.00 TO 309+38.90

** STA. 309+09.93 TO 309+46.83 - RIGHT TURN LANE ISLAND

PROPOSED TYPICAL SECTION

FLEETWOOD DR.

STA. 307+83.84 TO STA. 309+38.90

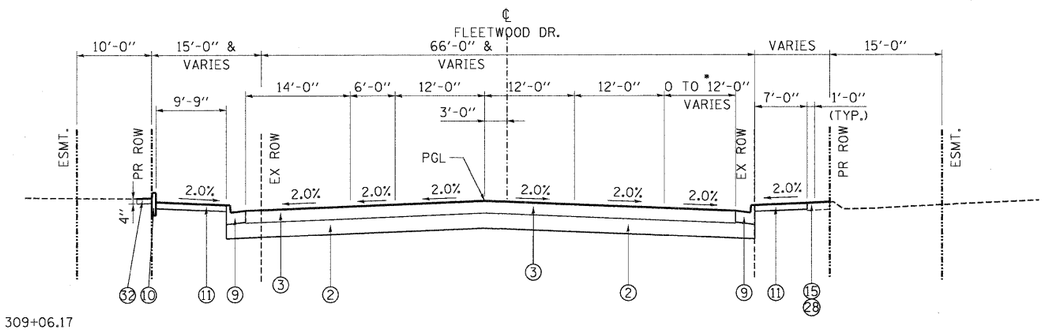

* STA. 307+31.89 TO STA. 307+83.84 - E.B. RIGHT TURN LANE TAPER VARIES 8'-3" TO 12'-0"

PROPOSED TYPICAL SECTION

FLEETWOOD DR.

STA. 307+31.89 TO STA. 307+83.84

EXISTING LEGEND (REMOVAL)

- (A) PCC PAVEMENT (10" AND VARIES)
- (B) HMA SURFACE (3" AND VARIES)
- (C) HMA SHOULDER (8" AND VARIES)
- (D) HMA SHOULDER (6" AND VARIES)
- (E) FENCE
- (F) CONCRETE BARRIER
- (G) PORTLAND CEMENT CONCRETE SHOULDER (10" & VAR.)
- (H) REMOVAL AND DISPOSAL OF UNSUITABLE MATERIAL
- (I) HOT-MIX ASPHALT BASE COURSE
- (J) EXIST PAVEMENT
- (K) PCC SIDE WALK
- (L) CURB AND GUTTER
- (M) CONCRETE MEDIAN
- (N) STEEL PLATE BEAM GUARDRAIL
- (O) NOT USED
- (P) PCC PAVEMENT (11" AND VARIES)
- (R) HMA SURFACE (4" AND VARIES)
- (S) HMA SURFACE (5" AND VARIES)
- (T) HMA SURFACE (6" AND VARIES)

PROPOSED LEGEND (PGES)

- (1) PCC PVT 10 JOINTED
- (2) AGGREGATE SUBGRADE 12"
- (3) HMA PAVT FD 9 3/4"
- (4) PARTIAL DEPTH PATCHING (SPECIAL)
- (5) AGGREGATE SHOULDERS, TYPE B 4"
- (6) TEMPORARY SOIL RETENTION SYSTEM
- (7) BITUMINOUS MATERIALS (PRIME COAT)
- (8) COMB CC&G TB6.12
- (9) COMB CC&G TB6.24
- (10) CONC CURB TB SPL
- (11) PC CONC SIDEWALK 5"
- (12) HOT-MIX ASPHALT SURACE COURSE, MIX "D", N70, 2"
- (13) SUBBASE GRANULAR MATERIAL, TYPE B (10")
- (14) COMPOST FURNISH AND PLACE, 2" & TOPSOIL FURNISH AND PLACE, 4"
- (15) TOPSOIL FURNISH AND PLACE, 6"
- (16) LONGITUDINAL CONSTRUCTION JOINT
- (17) LONGITUDINAL SAWED JOINT
- (18) TEMP CONC BARRIER (INSTALL ONLY)
- (19) TEMP PAVEMENT (INTERSTATE)
- (20) EMBANKMENT
- (21) RETAINING WALL (SEE STRUCTURAL PLANS)
- (22) FENCE (SEE PLANS FOR TYPE)
- (23) SLOTTED DRAIN 12" WITH 6" SLOT
- (24) TEMPORARY PAVEMENT
- (25) HOT-MIX ASPHALT SURACE COURSE, MIX "D", N70
- (26) STABILIZED SUBBASE (HMA) 4 1/2"
- (27) SEEDING, CLASS 7
- (28) SODDING, SALT TOLERANT
- (29) SEEDING, CLASS 4
- (30) CONC CURB TB
- (31) AGG WEDGE SHLD TYPE B (TONS)
- (32) HMA SC "C" N50 (IL 9.5mm)

FILE NAME = $FILEL$	USER NAME = $USER$	DESIGNED - MRK	REVISED -
		DRAWN - MRK	REVISED -
TENG & ASSOCIATES, INC. ENGINEERS/ARCHITECTS/PLANNERS CHICAGO, ILLINOIS	PLOT SCALE = $SCALE$	CHECKED - DDH	REVISED -
	PLOT DATE = $DATE$	DATE - 05/18/11	REVISED -

STATE OF ILLINOIS
DEPARTMENT OF TRANSPORTATION
FAP ROUTE 345 / US ROUTE 20

EXISTING AND PROPOSED TYPICAL SECTIONS
FLEETWOOD DRIVE

SCALE: 1"=10' | SHEET NO. OF SHEETS | STA. 301+08.77 TO STA. 309+38.90

F.A.P RTE.	SECTION	COUNTY	TOTAL SHEETS	SHEET NO.
345	8R-HB-2-BY-1	KANE	434	21

CONTRACT NO. 60K90

FED. ROAD DIST. NO. | ILLINOIS | FED. AID PROJECT

..\D160K90-XSCTL.DGN, ..\D160K90-BORDER01.DGN, ..\D160K90_LEGEND.DGN
5-12-2011, 16:03:08 HAYWARMZ \\FS-0044\DGN\VAULT_D-TRANS.07\2202\21379-001\CIVIL\CAD\60K90\SHEET\D160K90-SHT-TYPICAL 01.DGN