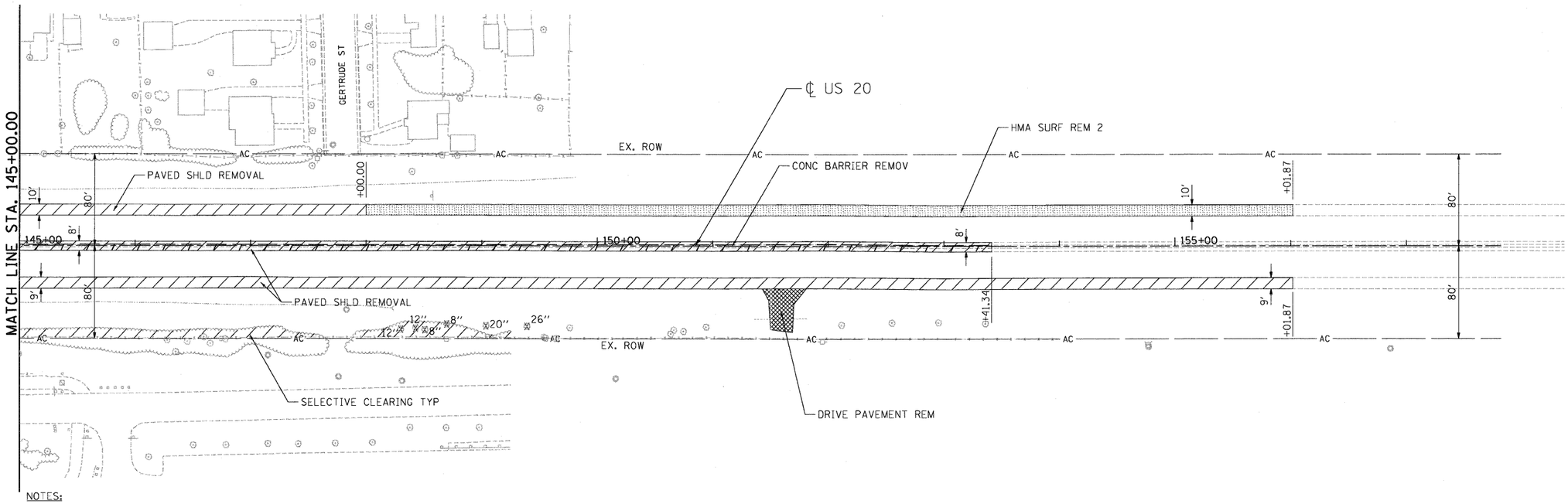

NOTES:
1. SEE DRAINAGE AND UTILITY PLANS FOR REMOVAL OF DRAINAGE RELATED ITEMS.
2. SEE GENERAL NOTES SHEET 3 FOR NOTE REGARDING LIMITS OF PAVED SHOULDER REMOVAL.

EXISTING PLAN

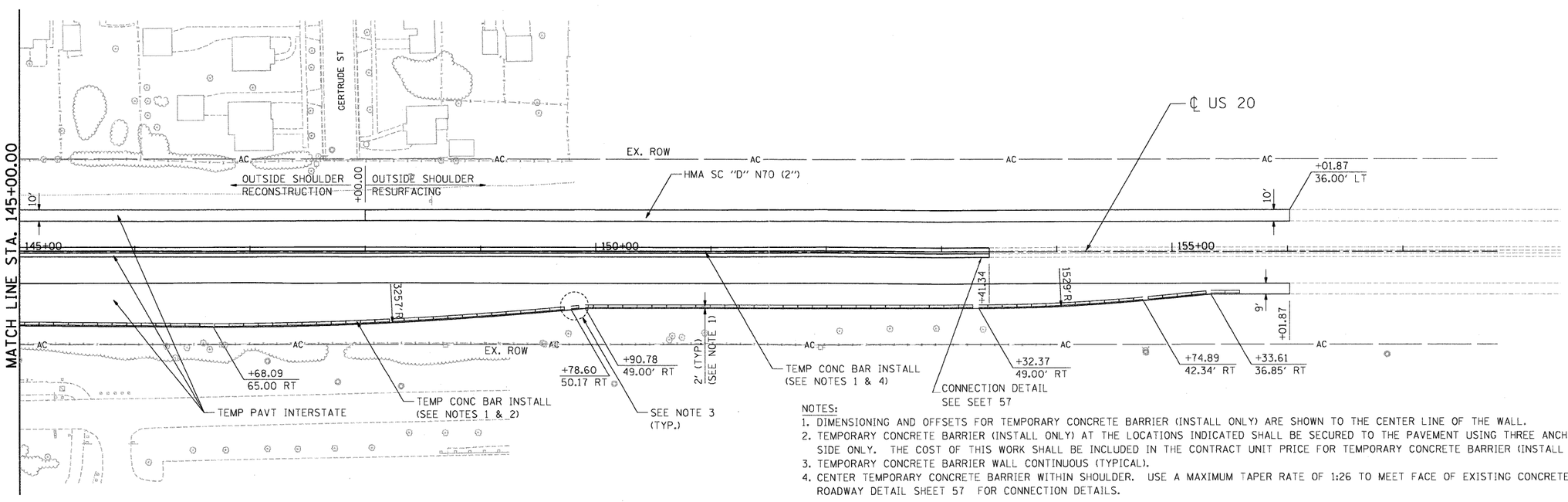

NOTES:
1. DIMENSIONING AND OFFSETS FOR TEMPORARY CONCRETE BARRIER (INSTALL ONLY) ARE SHOWN TO THE CENTER LINE OF THE WALL.
2. TEMPORARY CONCRETE BARRIER (INSTALL ONLY) AT THE LOCATIONS INDICATED SHALL BE SECURED TO THE PAVEMENT USING THREE ANCHORING PINS ON TRAFFIC SIDE ONLY. THE COST OF THIS WORK SHALL BE INCLUDED IN THE CONTRACT UNIT PRICE FOR TEMPORARY CONCRETE BARRIER (INSTALL ONLY).
3. TEMPORARY CONCRETE BARRIER WALL CONTINUOUS (TYPICAL).
4. CENTER TEMPORARY CONCRETE BARRIER WITHIN SHOULDER. USE A MAXIMUM TAPER RATE OF 1:26 TO MEET FACE OF EXISTING CONCRETE MEDIAN BARRIER. SEE ROADWAY DETAIL SHEET 57 FOR CONNECTION DETAILS.

PROPOSED PLAN

FILE NAME = $FILEL$	USER NAME = $USER$	DESIGNED - JP	REVISED -	STATE OF ILLINOIS DEPARTMENT OF TRANSPORTATION FAP ROUTE 345 / US ROUTE 20	ROADWAY PLAN U.S. ROUTE 20			F.A.P RTE.	SECTION	COUNTY	TOTAL SHEETS	SHEET NO.
		DRAWN - MH	REVISED -					345	8R-HB-2-BY-1	KANE	434	45
TENG TENG & ASSOCIATES, INC. ENGINEERS/ARCHITECTS/PLANNERS CHICAGO, ILLINOIS	PLOT SCALE = $SCALE$	CHECKED - DDH	REVISED -							CONTRACT NO. 60K90		
	PLOT DATE = $DATE$	DATE - 05/18/11	REVISED -		SCALE: 1"=50'	SHEET NO. OF SHEETS	STA. 145+00.00 TO STA. 156+00.00	FED. ROAD DIST. NO.	ILLINOIS	FED. AID PROJECT		

..\D160K90-BORDER01.DGN, ..\DIMASTER-ALIGNMNT.DGN, ..\D160H45-LEGEND.DGN, ..\D160K90-DESIGN.DGN, ..\D160K90-ROW050.DGN, ..\D160K90-REMOVAL5.DGN, ..\D160K90-TOPO1.DGN, ..\DIMASTER-TOPO2DPTS.DGN, ..\D160K90-SHT-PLAN07.DG
5-12-2011,16:04:54 HAYWARMZ \\FS-0044\AM\VAULT\D-TRANS.07\2282\21379-00\CIVIL\CAD\60K90\SHEET\D160K90-SHT-PLAN03.DGN