F.A.U. RTE.	SECTION	COUNTY	TOTAL SHEETS	SHEET NO.
0085	00-00246-02-FP	MCHENRY	292	068
STA.		TO STA.		
FED. ROAD DIST. NO. 1	ILLINOIS	FED. AID PROJECT		

CONTRACT NO: 63522

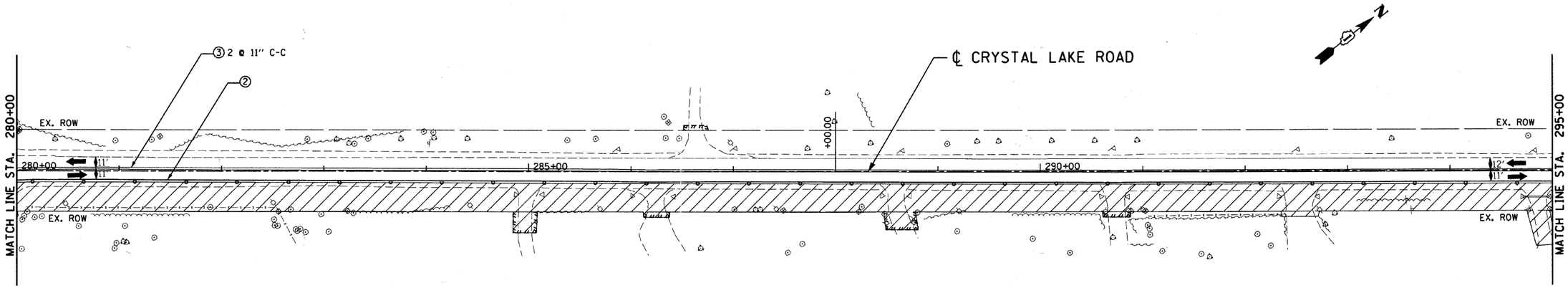

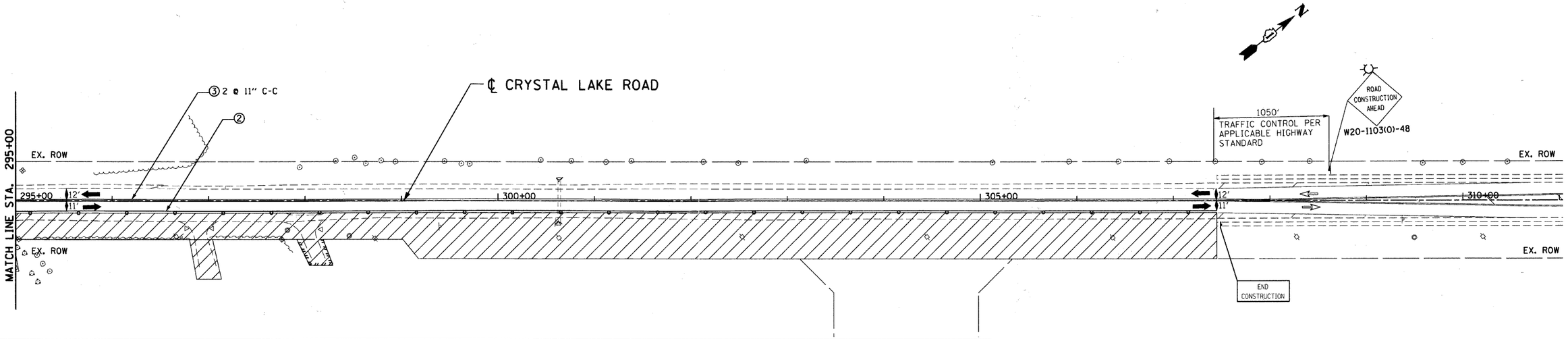

LEGEND

- WORK AREA
- TEMPORARY PAVEMENT
- TEMPORARY PAVEMENT FROM PREVIOUS STAGE
- BARRICADE, TYPE III, W/ TY A FLASHER
- PREVIOUS TRAFFIC PATTERN
- PR TRAFFIC PATTERN
- SIGN
- VERTICAL PANEL W/ STEADY BURNING LIGHT
- BARRICADE OR DRUMS
- TYPE B MONODIRECTIONAL FLASHING LIGHT

PAVEMENT MARKING LEGEND

1. TEMPORARY PAVEMENT MARKING LETTERS AND SYMBOLS
2. TEMPORARY PAVEMENT MARKING -LINE 4 Inch (WHITE)
3. TEMPORARY PAVEMENT MARKING -LINE 4 Inch (YELLOW)
4. TEMPORARY PAVEMENT MARKING -LINE 6 Inch (WHITE)
5. TEMPORARY PAVEMENT MARKING -LINE 8 Inch (YELLOW)
6. TEMPORARY PAVEMENT MARKING -LINE 12 Inch (YELLOW)
7. TEMPORARY PAVEMENT MARKING -LINE 24 Inch (WHITE)

REVISIONS	
NAME	DATE

MCHENRY COUNTY DIVISION OF TRANSPORTATION
WALKUP ROAD F.A.U. 0085

MOT & STAGE 1 CONSTRUCTION CRYSTAL LAKE ROAD STA 280+00 TO STA 310+00

SCALE: 1" = 50'
DRAWN BY: CC
DATE: 04/15/11
CHECKED BY: KA

TENG
TENG & ASSOCIATES, INC.
ENGINEERS/ARCHITECTS/PLANNERS
205 N. MICHIGAN AVE. CHICAGO, IL 60601
TELEPHONE: 312/616-3000