F.A.U RTE.	SECTION	COUNTY	TOTAL SHEETS	SHEET NO.
0085	00-00246-02-FP	MCHENRY	292	103
STA.	TO STA.			
FED. ROAD DIST. NO. 1	ILLINOIS	FED. AID PROJECT		

CONTRACT NO: 63522

EXISTING PLAN

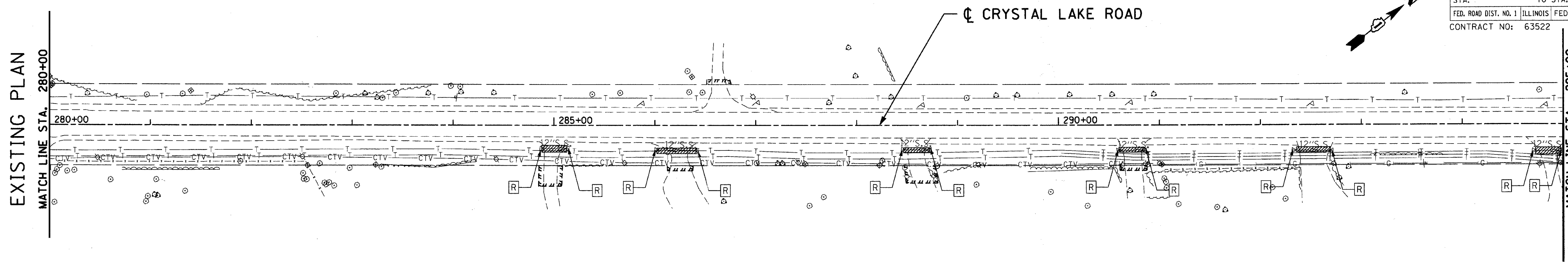

PROPOSED PLAN

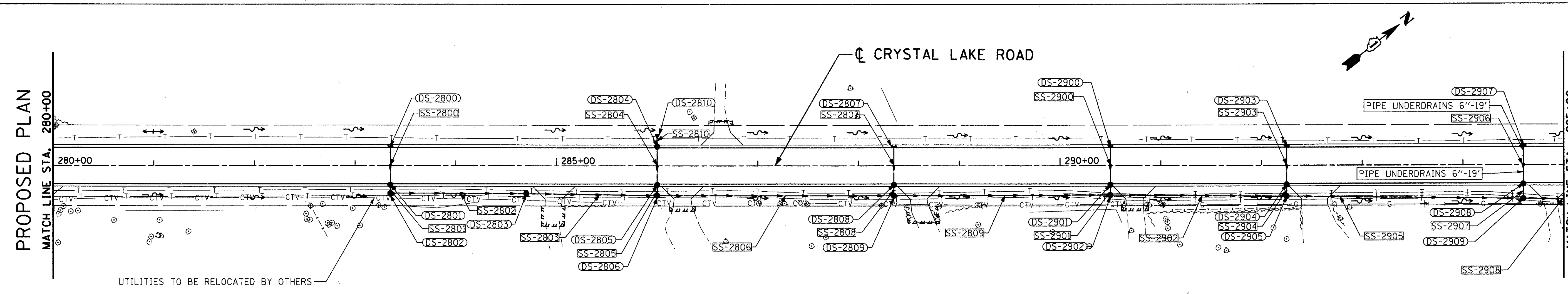

PROFILE

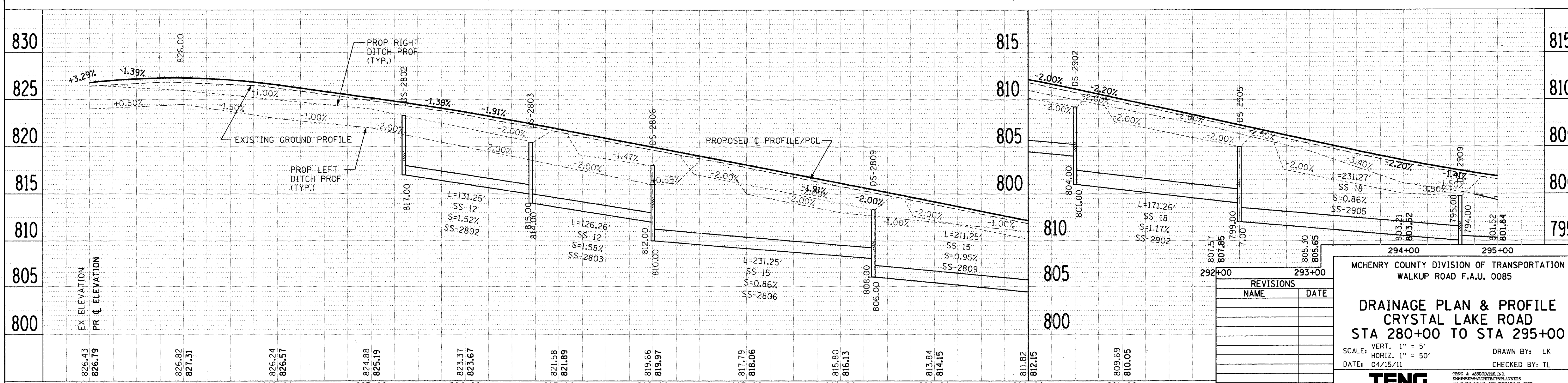

REVISIONS	
NAME	DATE

MCHENRY COUNTY DIVISION OF TRANSPORTATION
WALKUP ROAD F.A.U. 0085

DRAINAGE PLAN & PROFILE
CRYSTAL LAKE ROAD
STA 280+00 TO STA 295+00

SCALE: VERT. 1" = 5'
HORIZ. 1" = 50'
DATE: 04/15/11

DRAWN BY: LK
CHECKED BY: TL

TENG

TENG & ASSOCIATES, INC.
ENGINEERS/ARCHITECTS/PLANNERS
205 N. MICHIGAN AVE. CHICAGO, IL 60601
TELEPHONE: 312/616-0000

PLAN	BY	DATE
NOTE BOOK NO.		
SURVEYED		
PLOTTED		
ALIGNMENT CHECKED		
RT. OF WAY CHECKED		
CADD FILE NAME		

PROFILE	BY	DATE
NOTE BOOK NO.		
SURVEYED		
PLOTTED		
GRADES CHECKED		
B.M. NOTED		
STRUCTURE NOTAT'NS CH'KD		

..\AL02IA002.DGN, ..\PL02IA002.DGN, ..\RW02IA001.DGN, ..\BD99IA001.DGN, ..\RW02IA002.DGN, ..\DU02IA002.DGN, ..\UT02IA001.DGN, ..\DU02IA004.DGN, ..\SE02IA002.DGN, ..\AL02IA002.DGN, ..\PL02IA002.DGN, ..\RW02IA001.DGN, ..\RW02IA002.DGN, ..\PR02IA003.DGN, ..\UT02IA001.DGN, ..\DU02IA004.DGN, ..\XR02IA001.DGN, ..\PR02IA001.DGN, ..\DP0
4-14-2011, 15:12:40 \\FS-0044\AM\VAULT\D-TRANS_07\2202\3100-03\CIVIL\CAD\02 CONTRACT\A TENG\SHEET\DR02IA010.SHT
STANKIRJ