F.A.I. RTE.	SECTION	COUNTY	TOTAL SHEETS	SHEET NO.
0085	00-00246-02-FP	MCHENRY	292	191
STA.		TO STA.		
FED. ROAD DIST. NO. 1	ILLINOIS	FED. AID PROJECT		

CONTRACT NO: 63522

BENCHMARK

TBM "101" Elev. 922.31
Top of Northeast flange bolt of Fire Hydrant located at the Northwest corner of Walkup Road and Terra Cotta Avenue Near Sta. 50+45.

EXISTING STRUCTURE

None

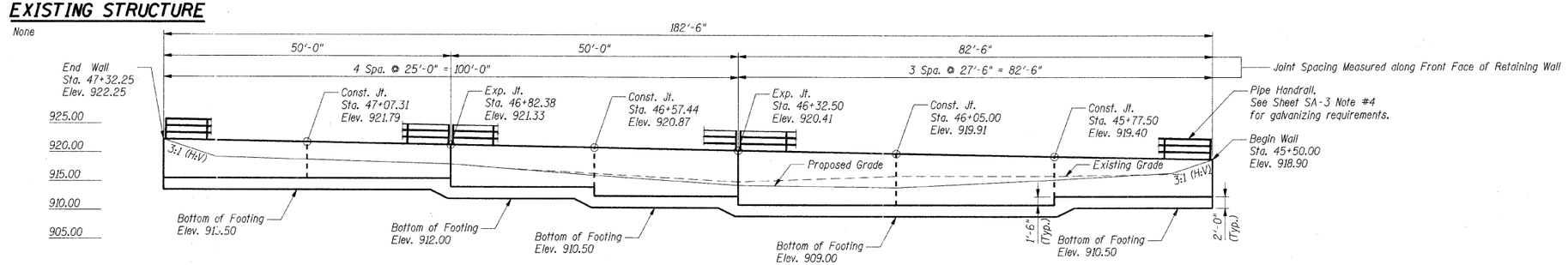

ELEVATION

(Looking @ Front Face of Wall)

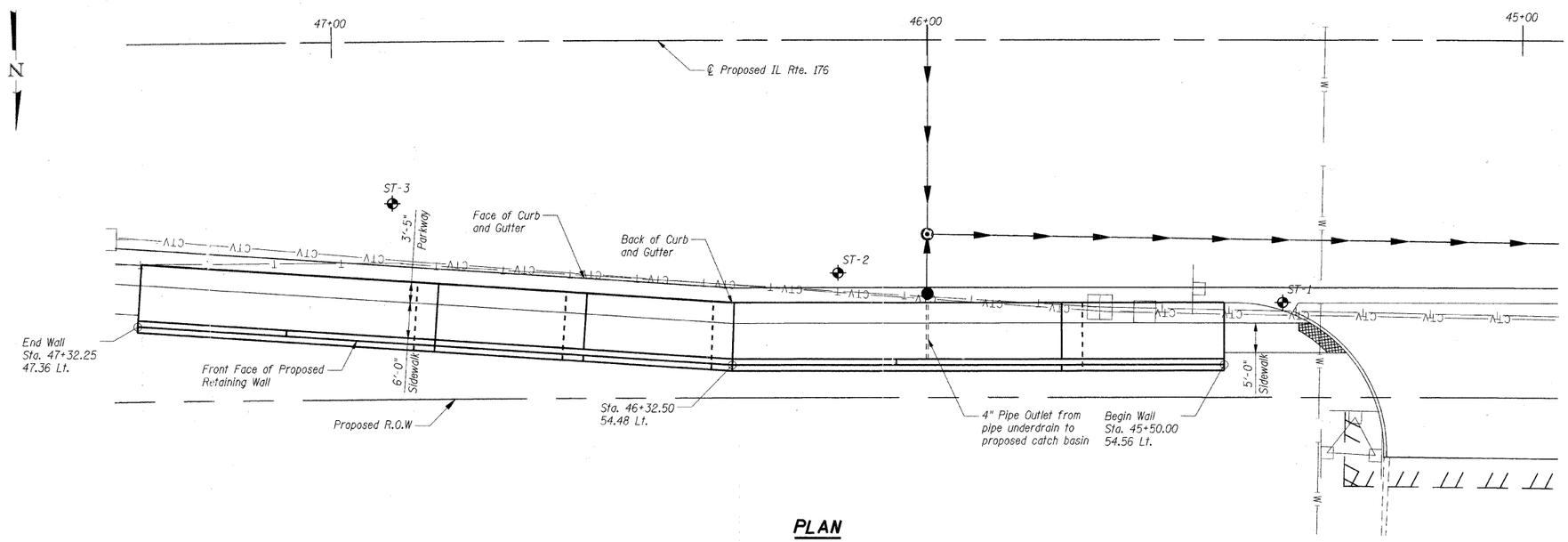

PLAN

Notes:

1. Offsets are measured from ℄ of IL Rte. 176 to the front face of the wall.
2. Wall is to be built along straight lines between construction joints.
3. Horizontal dimensions are measured along front face of wall.
4. Work this sheet with SA-2, SA-3, & SA-4.

INDEX OF SHEETS

SA-1 General Plan and Elevation
SA-2 Plan and Elevation
SA-3 Wall Section and Details
SA-4 Soil Boring Logs

LEGEND

- Exist. Water Main
- Exist. Cable TV
- Exist. Telephone
- Prop. Drainage
- ST-1 Soil Boring
- Exist. Power Pole
- Temp. Easement
- Prop. ROW
- Prop. Catch Basin
- Prop. Manhole
- Exist. Telephone Box
- Exist. Sign Structure
- Exist. Street Sign

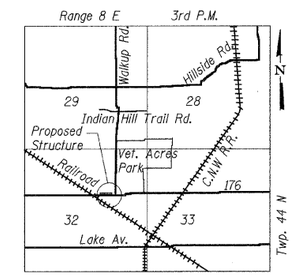

LOCATION SKETCH

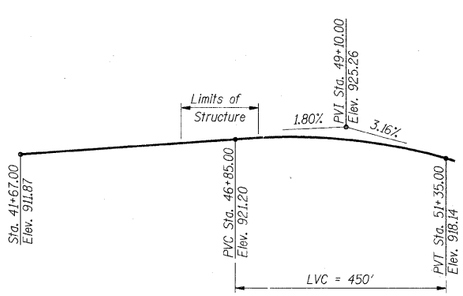

PROFILE GRADE

(Along ℄ IL Rte. 176)

TOTAL BILL OF MATERIAL

Item	Unit	Total
Porous Granular Embankment, Special	Cu. Yd.	149
Structure Excavation	Cu. Yd.	506
Concrete Structures	Cu. Yd.	210.6
Protective Coat	Sq. Yd.	30
Reinforcement Bars, Epoxy Coated	Pound	25,890
Pipe Handrail	Foot	182
Geocomposite Wall Drain	Sq. Yd.	111
Pipe Underdrains for Structures 4"	Foot	195

DESIGN STRESSES

f'c = 3,500 psi
fy = 60,000 psi (Reinforcement)

DESIGN SPECIFICATIONS

AASHTO Standard Specifications for Highway Bridges, 17th Edition, 2002.

GENERAL NOTES

1. Reinforcement bars shall conform to the requirements of ASTM A 706 Gr 60, See Special Provisions.
2. Reinforcement bars designated (E) shall be epoxy coated.
3. Protective Coat shall be applied to the top and sidewalk faces of the parapet.
4. The clear cover for reinforcement bars to the surface of concrete shall be 2" unless otherwise shown.

STATE OF ILLINOIS
5/2/11
EXPIRES 11/30/12

I certify that to the best of knowledge, information and belief, this retaining wall design is structurally adequate for the design loading shown on the plans. The design is an economical one for the style of structure and complies with requirements of the current AASHTO Standard Specifications for Highway Bridges.

SHT. SA-1

REVISIONS	
NAME	DATE

MCHENRY COUNTY DIVISION OF TRANSPORTATION
WALKUP ROAD F.A.U. 0085
SECTION 00-00246-02-FP
STATION 45+50.00 TO 47+32.25
ILLINOIS ROUTE 176 RETAINING WALL

GENERAL PLAN AND ELEVATION

SCALE: 3/32" = 1'-0" DRAWN BY: CPB
DATE: 04/15/11 CHECKED BY: TCG

TENG
TENG & ASSOCIATES, INC.
ENGINEERS/ARCHITECTS/PLANNERS
300 N. MICHIGAN AVE. CHICAGO, IL 60601
TELEPHONE: 312/856-0000

..\R502L00.DGN, ..\RW02A002.DGN, ..\UT02A00L.DGN, ..\U02A002.DGN, ..\SE02A002.DGN, ..\XR02A00L.DGN, ..\XR02A002.DGN, ..\B999A002.DGN, ..\PL02A002.DGN, ..\AL02A002.DGN
4-26-2011 12:53:50 \\FS-0044\MV\VAULT\D-TRANS_07\2202\300-03\STRUCT\CAD\02 CONTRACT\IL 176 WALL\SHEET\RS02L00LSH1 CALLTC