F.A.I. RTE.	SECTION	COUNTY	TOTAL SHEETS	SHEET NO.
0085	00-00246-02-FP	MCHENRY	292	202
STA.		TO STA.		
FED. ROAD DIST. NO. 1	ILLINOIS	FED. AID PROJECT		

CONTRACT NO: 63522

SOLDIER PILE SCHEDULE

SOLDIER PILE DATA						ENCASEMENT DATA		
PILE	SIZE	TOP ELEV.	BOTT. ELEV.	LENGTH (FT)	NO. OF STUDS	DIA. (IN)	TOP ELEV.	LENGTH (FT)
P101	W24x62	911.02	888.02	23.00	12	30	908.02	19.99
P102	W24x62	911.01	888.01	23.00	16	30	906.13	18.12
P103	W24x62	911.01	888.01	23.00	20	30	904.24	16.23
P104	W24x192	911.01	881.01	30.00	22	36	902.98	21.98
P105	W24x192	911.01	881.01	30.00	26	36	901.50	20.49
P106	W24x192	911.02	881.02	30.00	28	36	900.02	18.99
P107	W24x192	910.53	874.53	36.00	30	36	899.25	24.71
P108	W24x192	910.54	874.54	36.00	30	36	898.35	23.81
P109	W24x192	910.52	874.52	36.00	28	36	897.47	22.95
P110	W24x192	910.49	874.49	36.00	28	36	896.82	22.33
P111	W24x192	910.49	874.49	36.00	28	36	897.35	22.86
P112	W24x192	910.52	874.52	36.00	26	36	897.90	23.37
P113	W24x192	910.61	874.61	36.00	26	36	898.43	23.83
P114	W24x192	910.71	874.71	36.00	26	36	899.36	24.65
P115	W24x192	910.80	874.80	36.00	26	36	900.40	25.59
P116	W24x192	910.88	874.88	36.00	26	36	901.45	26.57
P117	W24x192	911.42	884.42	27.00	26	36	901.92	17.49
P118	W24x192	911.51	884.51	27.00	24	36	902.58	18.07
P119	W24x192	911.61	884.61	27.00	24	36	903.25	18.64
P120	W24x192	911.72	884.72	27.00	24	36	903.49	18.78
P121	W24x192	911.83	884.83	27.00	24	36	903.61	18.78
P122	W24x192	911.95	884.95	27.00	24	36	903.74	18.78
P123	W24x192	912.09	885.09	27.00	24	36	903.86	18.77
P124	W24x192	912.23	885.23	27.00	24	36	903.98	18.75
P125	W24x84	912.34	887.34	25.00	24	30	904.09	16.76
P126	W24x84	912.49	887.49	25.00	24	30	904.26	16.77
P127	W24x84	912.66	887.66	25.00	24	30	904.43	16.77
P128	W24x84	912.83	887.83	25.00	22	30	904.79	16.95
P129	W24x84	913.02	888.02	25.00	22	30	905.27	17.25
P130	W24x84	913.21	888.21	25.00	22	30	905.75	17.55
P131	W24x84	913.41	888.41	25.00	22	30	906.21	17.80
P132	W24x84	913.62	888.62	25.00	20	30	906.66	18.04
P133	W24x84	913.83	888.83	25.00	20	30	907.10	18.27
P134	W24x62	914.05	892.05	22.00	20	30	907.69	15.64
P135	W24x62	914.27	892.27	22.00	18	30	908.36	16.09
P136	W24x62	914.49	892.49	22.00	18	30	909.03	16.54
P137	W24x62	914.71	892.71	22.00	16	30	909.58	16.88
P138	W24x62	914.93	892.93	22.00	16	30	910.08	17.15
P139	W24x62	915.14	893.14	22.00	16	30	910.57	17.43
P140	W24x62	915.36	893.36	22.00	16	30	911.01	17.65
P141	W24x62	915.58	893.58	22.00	14	30	911.43	17.85
P142	W24x62	915.79	893.79	22.00	14	30	911.84	18.05
P143	W24x62	916.01	900.01	16.00	14	30	912.24	12.23
P144	W24x62	916.22	900.22	16.00	14	30	912.62	12.39
P145	W24x62	916.44	900.44	16.00	14	30	913.00	12.56
P146	W24x62	916.65	900.65	16.00	14	30	913.40	12.75
P147	W24x62	916.86	900.86	16.00	12	30	913.81	12.95
P148	W24x62	917.08	901.08	16.00	12	30	914.23	13.15
P149	W24x62	917.29	901.29	16.00	12	30	914.61	13.32
P150	W24x62	917.50	901.50	16.00	12	30	914.98	13.48
P151	W24x62	917.71	901.71	16.00	12	30	915.34	13.63

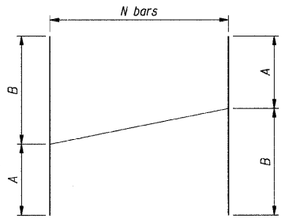

Bars v1(E) thru v6(E) and v8(E) thru v15(E)

BAR	A	B	N
v1(E)	5'-9"	11'-0"	25
v2(E)	11'-0"	15'-0"	22
v3(E)	11'-8"	14'-5"	26
v4(E)	14'-5"	12'-10"	26
v5(E)	12'-10"	9'-10"	26
v6(E)	13'-2"	11'-9"	25
v8(E)	11'-9"	10'-10"	30
v9(E)	10'-10"	10'-2"	30
v10(E)	10'-2"	8'-10"	30
v11(E)	8'-10"	8'-0"	30
v12(E)	8'-0"	7'-5"	30
v13(E)	7'-5"	6'-10"	30
v14(E)	6'-10"	6'-3"	30
v15(E)	6'-3"	5'-10"	30

BAR CUTTING DIAGRAM

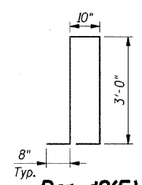

Bar d2(E)

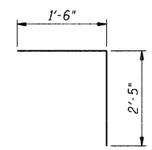

Bar d3(E)

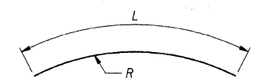

BAR	L	R
h3(E)	29'-9"	59'-6"
h4(E)	25'-1"	30'-5"

Bars h3(E) & h4(E)

CONCRETE PANELS BAR LIST

BAR	NO.	SIZE	LENGTH	SHAPE
d2(E)	78	#4	8'-2"	
d3(E)	306	#4	3'-11"	
e1(E)	18	#4	26'-4"	
h1(E)	78	#6	29'-5"	
h2(E)	32	#6	21'-3"	
h3(E)	58	#6	29'-9"	
h4(E)	30	#6	25'-1"	
h5(E)	26	#6	24'-8"	
h6(E)	126	#6	34'-5"	
h7(E)	56	#6	29'-8"	
v1(E)	25	#4	16'-9"	
v2(E)	22	#4	26'-0"	
v3(E)	26	#4	26'-1"	
v4(E)	26	#4	27'-3"	
v5(E)	26	#4	22'-8"	
v6(E)	25	#4	24'-11"	
v7(E)	160	#4	11'-9"	
v8(E)	30	#4	22'-7"	
v9(E)	30	#4	21'-0"	
v10(E)	30	#4	19'-0"	
v11(E)	30	#4	16'-10"	
v12(E)	30	#4	15'-5"	
v13(E)	30	#4	14'-3"	
v14(E)	30	#4	13'-1"	
v15(E)	30	#4	12'-1"	

BILL OF MATERIAL

ITEM	UNIT	TOTAL
Concrete Structures	Cu Yd	209.9
Protective Coat	Sq Yd	178.8
Reinforcement Bars, Epoxy Coated	Lbs	26,050

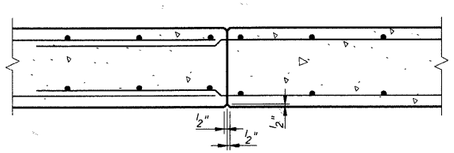

CONSTRUCTION JOINT DETAIL AT PARAPET

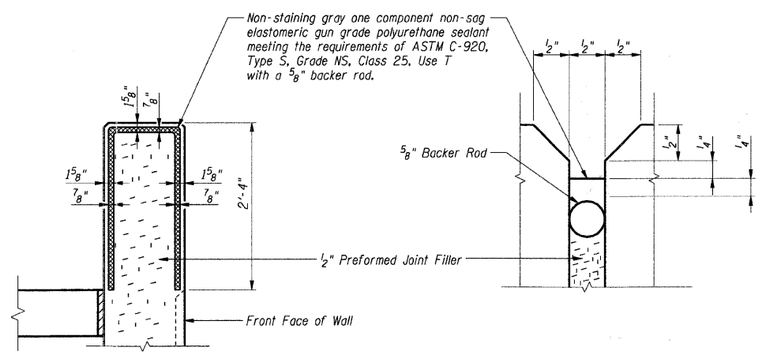

EXPANSION JOINT DETAIL AT PARAPET

Cost of Preformed Joint Filler, Backer Rod, and sealant included with Concrete Structures. Water seal not shown for clarity.

Note:

1. Work this sheet with sheets SB-1 thru SB-14.

SHT. SB-8

REVISIONS	
NAME	DATE

MCHENRY COUNTY DIVISION OF TRANSPORTATION
WALKUP ROAD F.A.U. 0085
SECTION 00-00246-02-FP
STATION 54+85.02 TO 59+49.91
VETERAN ACRES PARK RETAINING WALL

SCHEDULES AND DETAILS

SCALE: N.T.S. DRAWN BY: CPB
DATE: 04/15/11 CHECKED BY: TCG

TENG

TENG & ASSOCIATES, INC.
ENGINEERS•ARCHITECTS•PLANNERS
350 N. MICHIGAN AVE. CHICAGO, IL 60601
TELEPHONE: 312-616-0000

..\BD99\A002.DGN, ..\R5002VA002.SHT
4/14/2011, 15:16:31
\\FS-0044\AM\VAULT\D-TRANS.07\2202\300-03\STRUCT\CAD\02 CONTRACT\VA VETERAN ACRES PARK WALL\SHEET\R5002VA002.SHT