ORIGINAL SURVEY		BY	DATE
NOTE BOOK	SURVEYED		
	PLOTTED		
	TEMPLATE		
	AREAS		
NO.	AREAS CHECKED		

FINAL SURVEY		BY	DATE
NOTE BOOK	SURVEYED		
	PLOTTED		
	TEMPLATE		
	AREAS		
NO.	AREAS CHECKED		

..\XW021A025_F.DGN, ..\XW021A025_F.DGN, ..\XW021A025_F.DGN, ..\XW021A025_F.DGN, ..\XW021A025_F.DGN, ..\XW021A025_F.DGN, ..\XW021A025_F.DGN, ..\XW021A025_F.DGN, ..\XW021A025_F.DGN, ..\XW021A025_F.DGN, ..\XW021A025_F.DGN, ..\XW021A025_F.DGN, ..\XW021A025_F.DGN, ..\XW021A025_F.DGN, ..\XW021A025_F.DGN,
4-14-2011, 15:26:05 F:\DOC20000\3100-03\CIVIL\GEOPAK\XS021A060_F.SHT STANKIRJ

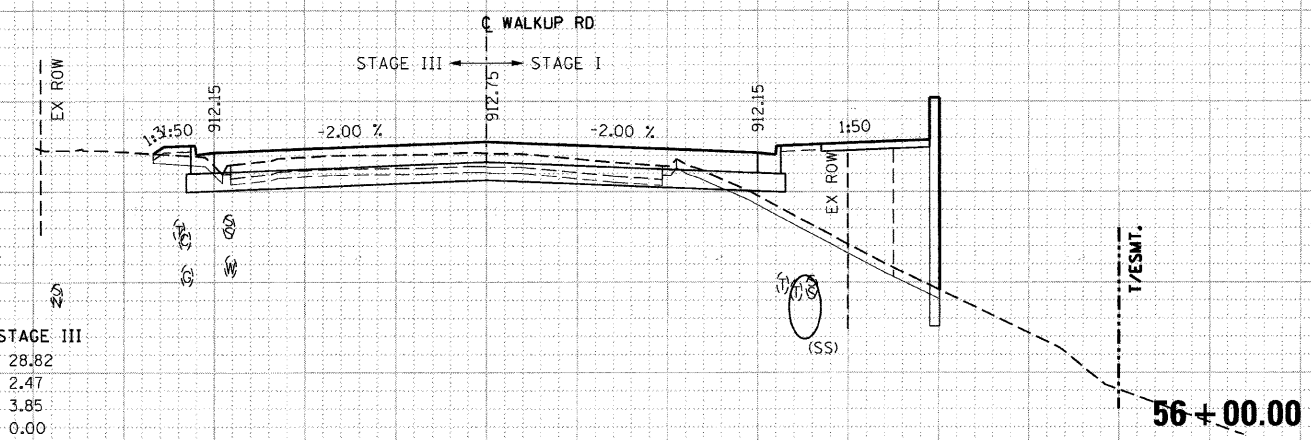

ALL UNITS IN SQ FT	STAGE I	STAGE III
EARTH EXCAVATION=	17.66	28.82
EMBANKMENT=	70.00	2.47
UNS MTL (TOPSOIL EXC)=	14.53	3.85
UNS MTL (UNDERCUT)=	0.00	0.00
POROUS GRAN EMB SUBGR=	0.00	0.00

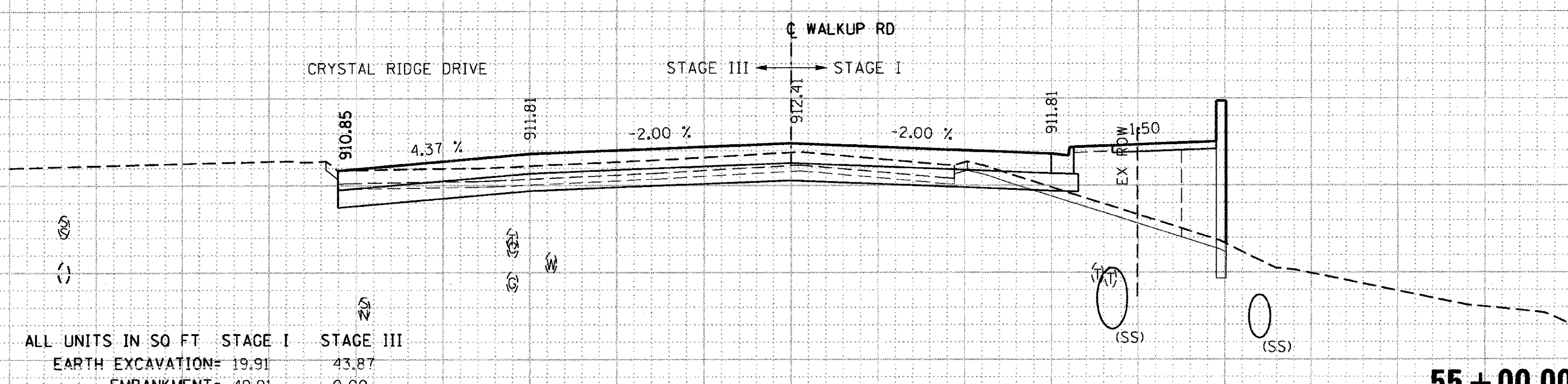

ALL UNITS IN SQ FT	STAGE I	STAGE III
EARTH EXCAVATION=	19.91	43.87
EMBANKMENT=	49.91	0.00
UNS MTL (TOPSOIL EXC)=	14.90	0.00
UNS MTL (UNDERCUT)=	0.00	0.00
POROUS GRAN EMB SUBGR=	0.00	0.00

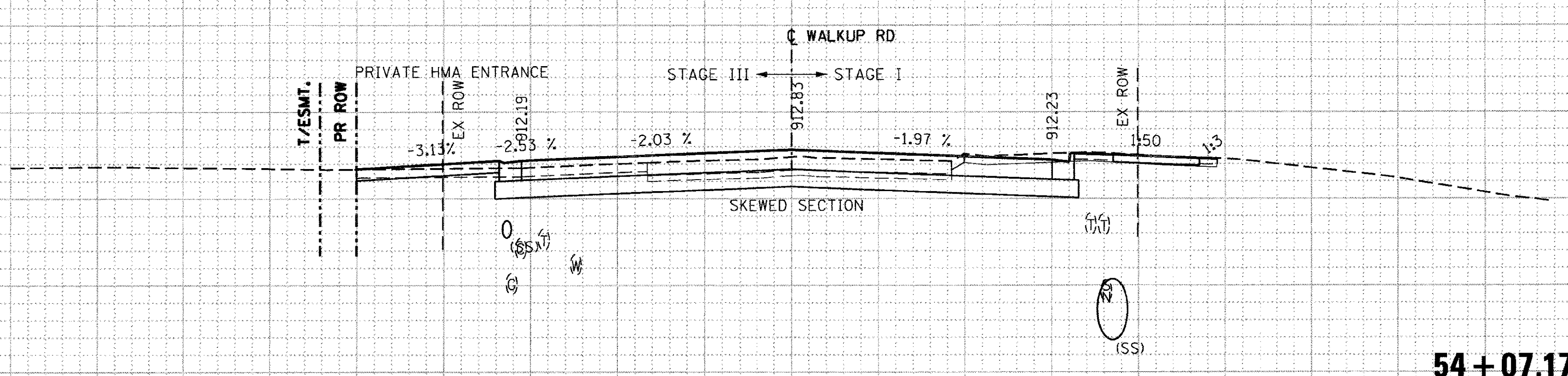

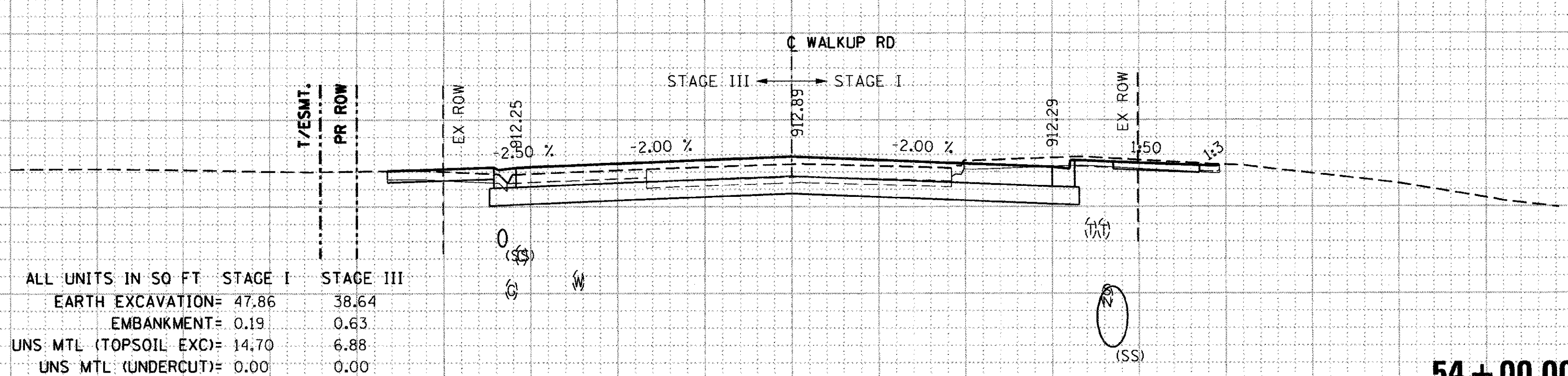

ALL UNITS IN SQ FT	STAGE I	STAGE III
EARTH EXCAVATION=	47.86	38.64
EMBANKMENT=	0.19	0.63
UNS MTL (TOPSOIL EXC)=	14.70	6.88
UNS MTL (UNDERCUT)=	0.00	0.00
POROUS GRAN EMB SUBGR=	0.00	0.00

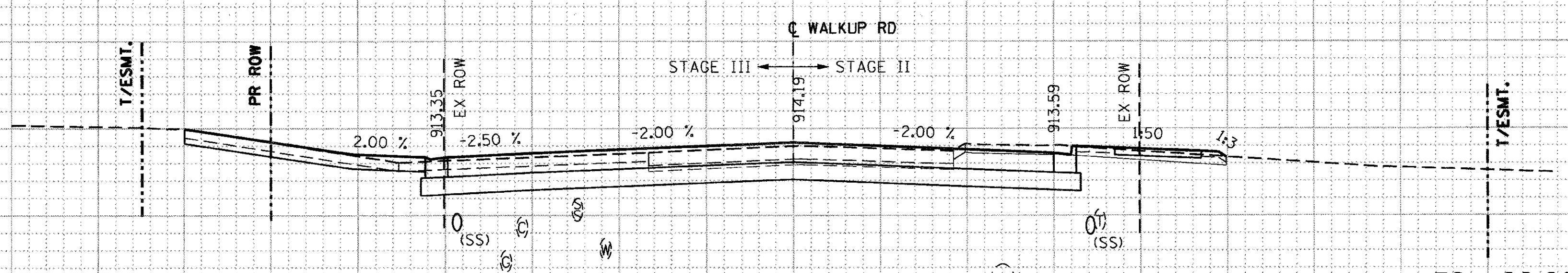

ALL UNITS IN SQ FT	STAGE II	STAGE III
EARTH EXCAVATION=	50.61	61.66
EMBANKMENT=	4.56	0.05
UNS MTL (TOPSOIL EXC)=	15.03	0.00
UNS MTL (UNDERCUT)=	0.00	0.00
POROUS GRAN EMB SUBGR=	0.00	0.00

NOTE: THE EXACT LOCATION AND ELEVATION OF EXISTING STRUCTURES, UTILITIES, AND PIPING SHALL BE VERIFIED IN THE FIELD BY THE CONTRACTOR.

F.A.U RTE.	SECTION	COUNTY	TOTAL SHEETS	SHEET NO.
0085	00-00246-02-FP	MCHENRY	292	262
STA. 53+00.00	TO STA. 56+00.00			
FED. ROAD DIST. NO. 1	ILLINOIS	FED. AID PROJECT		
CONTRACT NO: 63522				

PROPOSED CROSS-SECTIONS: WALKUP ROAD